Purchasing Office
191 South East St
Frederick, Maryland 21701
301-644-5208 phone
301-644-5213 fax

Frederick County Public Schools
Reach. Challenge. Prepare.

Kerrie Koopman CPPB, CPPO, CPP,
Purchasing Manager
Kim Miskell, CSBO, Assistant Purchasing Manager
Bill Meekins CPPB, CPPO, CSBO, CPCP,
Purchasing Agent
Shane Ryberg, Purchasing Agent

BID NUMBER/NAME:	21C5, Lincoln A Facility Roof Replacement Project
BID ISSUE DATE:	January 14, 2021
CONTRACT MANAGER:	Kim Miskell, CSBO, Assistant Purchasing Manager, kim.miskell@fcps.org
CONTRACT ADMINISTRATOR:	Brian Staiger, Senior Project Manager, Capital Program Department, brian.staiger@fcps.org
QUESTIONS:	Questions due no later than 4:00 P.M., local time, on February 2, 2021 Submit questions in writing to the Contract Manager listed above with a copy to the Contract Administrator.
PRE-BID DATE:	2:00 P.M., local time, on January 28, 2021 Starts at Lincoln "A" Building, 200 Madison Street and Proceed to Gov. Thomas Johnson High School, 1501 North Market Street, Frederick, MD
OBTAINING BID DOCUMENTS:	To view and/or download this solicitation package please visit our webpage at: www.fcps.org/bidlist. If you have problems downloading this bid or applicable addenda, contact: amy.beall@fcps.org
BONDS REQUIRED:	YES
MBE REQUIREMENTS:	YES
PROPOSAL DUE DATE:	10:00 A.M., local time, on February 11, 2021 **RFP's will be opened and publicly read utilizing Skype Business:** **Skype Business: (240) 236-6172 (FCPS) Conference ID: 7907906** Meeting URL: https://meet.fcps.org/kimberly.miskell/D21WC0P9?sl=1
BID SUBMISSION:	Due to COVID-19, in order to protect our Vendors and Staff, the Purchasing Department will only be accepting on-line bid submissions via ProcureNow https://secure.procurenow.com/portal/fcps
TENTATIVE AWARD DATE:	BOE Work Session, scheduled on: March 10, 2021
ELIGIBILITY TO BID:	All Frederick County Public School vendors and or contractors interested in bidding on FCPS projects must register at eMaryland Marketplace Advantage www.procurement.maryland.gov. FCPS will no longer accept bidder's applications.

FREDERICK COUNTY PUBLIC SCHOOLS
BID 21C5, LINCOLN A FACILITY ROOF REPLACEMENT PROJECT
TABLE OF CONTENTS

	PAGE #
Cover Page	1
Table of Contents	2
Invitation to Bid	3
FCPS Map; FCPS Calendar and FCPS Directory 2020 - 2021	4 - 7
Prevailing Wage Requirements	8 - 14
AIA Document A701 - 1997 Instructions to Bidders	15 - 28
FCPS Supplemental Instructions to Bidders (Supplement to AIA Doc. A701)	29 - 42
Form of Proposal 21C5	43 - 44
Bid Bond - AIA Document A310 - 2010	45 - 48
Certified MBE Utilization & Fair Solicitation Affidavit – Attachment A	49 - 50
MBE Participation Schedule – Attachment B	51
AIA Document A101 - 2017 Standard Form of Agreement Between Owner and Contractor	52 - 74
AIA Document A201 - 2017 General Conditions of the Contract for Construction	75 - 142
Statutory Affidavit and Non-Collusion Certification	143 - 144
Certification of Compliance	145 - 146
Vendor Conflict of Interest Disclosure Form	147
MD COMAR 21.07.02.10 Performance and Payment Bonds	148 - 152
MBE Procedures – Reg. No. 200-8	153 - 181
Specifications	182 - 344
Drawings	345 - 348

Purchasing Office
191 South East Street
Frederick, Maryland 21701
301-644-5208 phone
301-644-5213 fax
kim.miskell@fcps.org

Frederick County Public Schools
Reach. Challenge. Prepare.

Kerrie Koopman CPPB, CPPO, CPP,
Purchasing Manager
Kim Miskell, CSBO, Assistant Purchasing Manager
Bill Meekins CPPB, CPPO, CSBO, CPCP,
Purchasing Agent
Shane Ryberg, Purchasing Agent

INVITATION TO BID

January 14, 2021

Bid 21C5, Lincoln A Facility Roof Replacement Project

The Board of Education of Frederick County will receive proposals for Bid 21C5, Lincoln A Facility Roof Replacement Project. Proposals will only be received electronically via ProcureNow (https://secure.procurenow.com/portal/fcps) prior to and no later than 10:00 a.m., local time, on February 11, 2021. Proposal received after this time will not be accepted.

RFP's will be opened and publicly read utilizing Skype Business: (240) 236-6172 (FCPS) Conference ID: 7907906
Meeting URL: https://meet.fcps.org/kimberly.miskell/D21WC0P9?sl=1

A pre-proposal meeting will be held at 2:00 P.M., local time, on January 28, 2021, starts at Lincoln "A" Building, 200 Madison Street and Proceed to Gov. Thomas Johnson High School, 1501 North Market Street, Frederick, MD

To view and/or download this solicitation package please visit our webpage at: http://www.fcps.org/bidlist.

All FCPS vendors and or contractors interested in bidding on FCPS projects must register at www.emarylandmarketplace.com, prior to contract award. FCPS will no longer accept bidder's applications.

Certified Minority Business Enterprises are encouraged to respond to this solicitation notice. The contractor or supplier who provides materials, supplies, equipment and/or services for this construction project shall attempt to achieve the specific overall MBE goal of 15% established for this project. All prime contractors, including certified MBE firms, when submitting bids or proposals as general or prime contractors, are required to attempt to achieve this goal from certified MBE firms.

The sub-goals established for this project are 0% from African American-owned businesses and 0% from Asian-owned businesses.

The bidder or offeror shall submit with its bid or proposal a completed "Certified MBE Utilization and Fair Solicitation Affidavit" (Attachment A) and "MBE Participation Schedule" (Attachment B), as described in the solicitation documents.

This project will be bid with Prevailing Wage Rates.

FCPS System does not discriminate in admissions, access, treatment, or employment in its programs or activities on the basis of race, color, gender, age, national origin, religion, or disability. For more information, contact the Executive Director of Legal Services at 301-696-6851.

The Board of Education of Frederick County, Maryland, reserves the right to reject any and all bids and to waive any informalities or irregularities in bidding.

By order of the Board of Education of Frederick County, Maryland.

Kim Miskell, CSBO, Assistant Purchasing Manager
kim.miskell@fcps.org

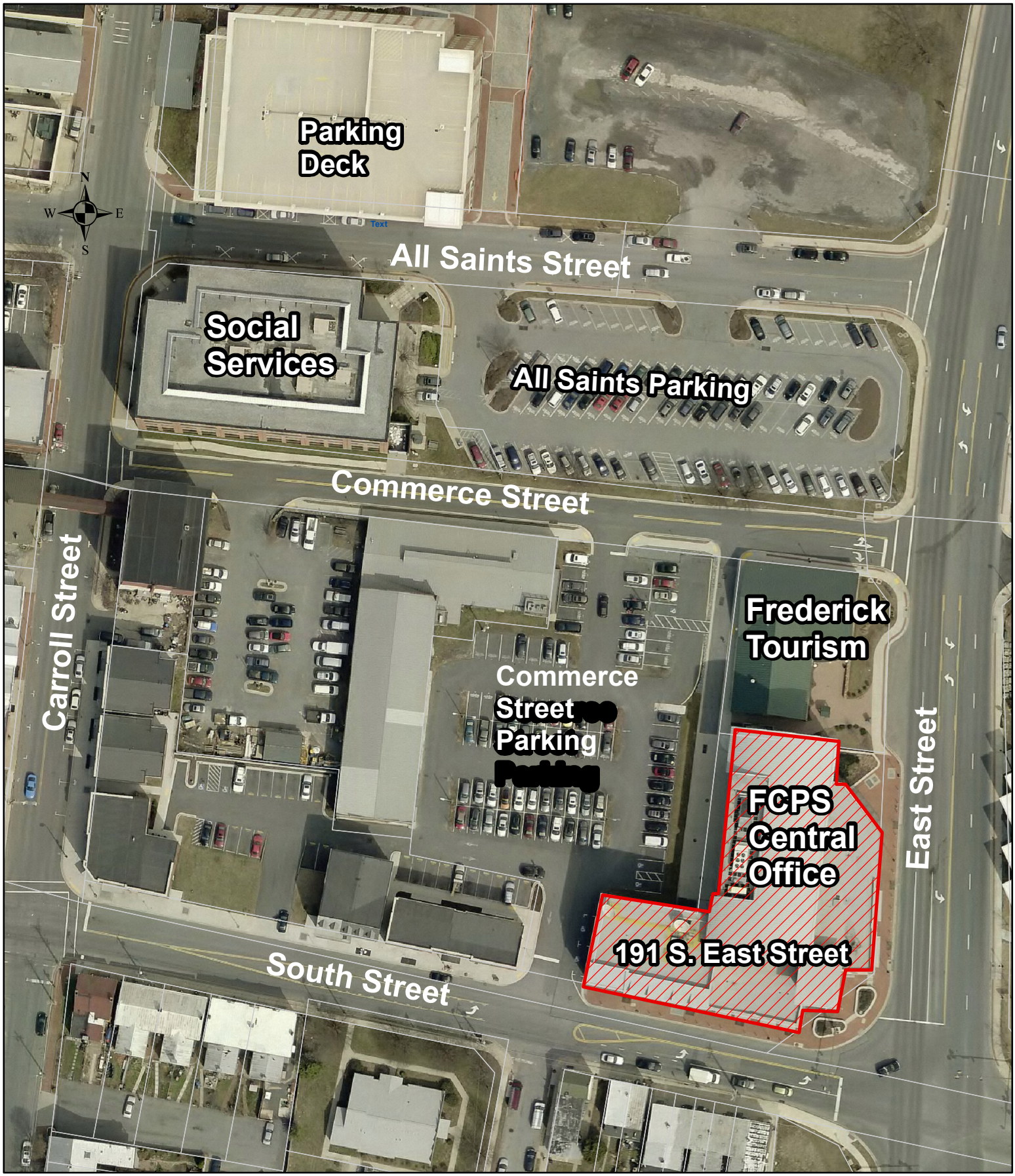

Frederick County Public Schools
191 S. East Street

THE SCHOOL YEAR AT A GLANCE

2020

August 31 (Monday)	First Day of School
September 7 (Monday)	Schools* and Offices Closed
September 25 (Friday)	Schools* Closed
September 28 (Monday)	Schools* Closed
October 2 (Friday)	2-Hour Early Dismissal for Students
October 16 (Friday)	Schools* Closed for Students
October 21 (Wednesday)	4-Hour Delayed Opening: Elementary and Middle Only (Parent-Teacher Conferences), No Pre-K; High Schools Open on Time
October 22 (Thursday)	4-Hour Delayed Opening: Elementary and Middle Only (Parent-Teacher Conferences), No Pre-K; High Schools Open on Time
October 23 (Friday)	3 ½-Hour Early Dismissal: Elementary and Middle Only (Parent-Teacher Conferences), No Pre-K; High Schools Open Full Day
November 3 (Tuesday)	Schools** Closed
November 9 (Monday)	Schools* Closed for Students
November 25 (Wednesday)	Schools* and Offices Closed
November 26-27 (Thursday-Friday)	Schools** and Offices Closed
December 11 (Friday)	2-Hour Early Dismissal for Students
December 24-25 (Thursday-Friday)	Schools** and Offices Closed
December 28-31 (Monday-Thursday)	Schools** Closed

All dates are subject to change, as the COVID-19 pandemic continues to impact educational programs and school operations during the 2020-2021 school year. The *Maryland Strong Roadmap to Recovery* and the Maryland State Department of Education's *Recovery Plan for Education* guide FCPS in determining responses that will best keep students and staff safe as we work to achieve our mission to reach, challenge and prepare all students for success. Please check www.fcps.org/update and monitor FCPS FindOutFirst messages for the newest information. ★

2021

January 1 (Friday)	Schools** and Offices Closed
January 18 (Monday)	Schools** and Offices Closed
January 29 (Friday)	Schools* Closed for Students
February 15 (Monday)	Schools** and Offices Closed
March 3 (Wednesday)	2-Hour Early Dismissal for Students
March 29-31 (Monday-Wednesday)	Schools* Closed
April 1 (Thursday)	Schools* Closed
April 2-5 (Friday-Monday)	Schools** and Offices Closed
April 12 (Monday)	Schools* Closed for Students
May 18 (Tuesday)	2-Hour Early Dismissal for Students
May 31 (Monday)	Schools** and Offices Closed
June 22*** (Tuesday)	2-Hour Early Dismissal/Last Day of School for Students

**BOE Determined*

***State Mandated (See page 40)*

****This calendar includes 5 days for snow or other emergency closings. FCPS will make up days closed for inclement weather or other emergencies in the following sequence: June 16, 17, 18, 21, and 22. If no snow days are used, the last day for students is Tuesday, June 15. The June 2-hour early dismissal will occur on the last day of school for students. If some but not all days are needed, the school year will be shortened by the number of unused days to provide 180 days for students. Dates are subject to BOE revision.*

Get Calendar Details:

www.fcps.org/calendar

Like us on Facebook: FCPS Maryland

Follow us on Twitter: @FCPSMaryland

Select FindOutFirst email calendar updates and emergency-closing text messages: www.fcps.org/fof

See the Calendar Handbook months pages

FCPS Maryland **@FCPSMaryland** **www.fcps.org/fof**

DIRECTORY OF SCHOOLS

ELEMENTARY

1. **Ballenger Creek** ◗ **240-236-2500**
Ms. Megan Stein, Principal
5250 Kingsbrook Drive
Frederick, MD 21703
Fax 240-236-2501

2. **Brunswick** ◗◆ **240-236-2900**
Mr. Justin McConnaughey, Principal
400 Central Avenue
Brunswick, MD 21716
Fax 240-236-2901

3. **Butterfly Ridge** ◗●◆★ **240-566-0300**
Dr. Patricia Hosfelt, Principal
601 Contender Way
Frederick, MD 21703
Fax 240-566-0301

4. **Carroll Manor** ◗◆ **240-236-3800**
Ms. Kimberly Robertson, Principal
5624 Adamstown Road
Adamstown, MD 21710
Fax 240-236-3801

5. **Centerville** **240-566-0100**
Ms. Karen Hopson, Principal
3601 Carriage Hill Drive
Frederick, MD 21704
Fax 240-566-0101

6. **Deer Crossing** **240-236-5900**
Ms. Amy Routzahn, Principal
10601 Finn Drive
New Market, MD 21774
Fax 240-236-5901

7. **Emmitsburg** ● **240-236-1750**
Ms. Amber Madigan, Principal
300 South Seton Avenue
Emmitsburg, MD 21727
Fax 240-236-1751

8. **Glade** ◗◆ **240-236-2100**
Mr. Stephen Raff, Principal
9525 Glade Road
Walkersville, MD 21793
Fax 240-236-2101

9. **Green Valley** **240-236-3400**
Dr. Giuseppe Di Monte, Principal
11501 Fingerboard Road
Monrovia, MD 21770
Fax 240-236-3401

10. **Hillcrest** ◗●◆★ **240-236-3200**
Mr. Karl Williams, Principal
1285 Hillcrest Drive
Frederick, MD 21703
Fax 240-236-3201

11. **Kemptown** **240-236-3500**
Ms. Kathryn Golightly, Principal
3456 Kemptown Church Road
Monrovia, MD 21770
Fax 240-236-3501

12. **Lewistown** ◆ **240-236-3750**
Ms. Belinda Fockler, Principal
11119 Hessong Bridge Road
Thurmont, MD 21788
Fax 240-236-3751

13. **Liberty** **240-236-1800**
Ms. Jana Strohmeyer, Principal
11820 Liberty Road
Frederick, MD 21701
Fax 240-236-1801

14. **Lincoln** ●◆★ **240-236-2650**
Mr. Eric Rhodes, Principal
200 Madison Street
Frederick, MD 21701
Fax 240-236-2651

15. **Middletown** **240-236-1100**
Grades 3-5
Ms. Jan Hollenbeck, Principal
201 East Green Street
Middletown, MD 21769
Fax 240-236-1150

16. **Middletown Primary** ◗◆ **240-566-0200**
Grades Pre-K–2
Ms. Sandra Fox, Principal
403 Franklin Street
Middletown, MD 21769
Fax 240-566-0201

17. **Monocacy** ◗●★ **240-236-1400**
Mr. Troy Barnes, Principal
7421 Hayward Road
Frederick, MD 21702
Fax 240-236-1401

18. **Myersville** **240-236-1900**
Ms. Dana Austin, Principal
429 Main Street
Myersville, MD 21773
Fax 240-236-1901

19. **New Market** ◗ **240-236-1300**
Mr. Jason Bowser, Principal
93 West Main Street
New Market, MD 21774
Fax 240-236-1301

20. **New Midway-Woodsboro**
Ms. Kimberly Clifford, Principal
A) New Midway **240-236-1500**
Grades 3-5
12226 Woodsboro Pike
Keymar, MD 21757
Fax 240-236-1501
B) Woodsboro ● **240-236-3700**
Grades Pre-K–2
101 Liberty Road
Woodsboro, MD 21798
Fax 240-236-3701

21. **North Frederick** ◗●◆★ **240-236-2000**
Ms. Tracy Poquette, Principal
1010 Fairview Avenue
Frederick, MD 21701
Fax 240-236-2001

22. **Oakdale** **240-236-3300**
Ms. Leigh Warren, Principal
5830 Oakdale School Road
Ijamsville, MD 21754
Fax 240-236-3301

23. **Orchard Grove** ●◆ **240-236-2400**
Mr. Jay Corrigan, Principal
5898 Hannover Drive
Frederick, MD 21703
Fax 240-236-2401

24. **Parkway** **240-236-2600**
Ms. Nicole Bell, Principal
300 Carroll Parkway
Frederick, MD 21701
Fax 240-236-2601

25. **Sabillasville** **240-236-6000**
Ms. Kate Krietz, Principal
16210-B Sabillasville Road
Sabillasville, MD 21780
Fax 240-236-6001

26. **Spring Ridge** ◗◆ **240-236-1600**
Dr. DeVeda Coley, Principal
9051 Ridgefield Drive
Frederick, MD 21701
Fax 240-236-1601

27. **Sugarloaf** **240-566-0500**
Ms. Tess Blumenthal, Principal
3400 Stone Barn Drive
Frederick, MD 21704
Fax 240-566-0501

28. **Thurmont** **240-236-0900**
Grades 3-5
Ms. Debra O'Donnell, Principal
805 East Main Street
Thurmont, MD 21788
Fax 240-236-0901

29. **Thurmont Primary** ● **240-236-2800**
Grades Pre-K–2
Dr. Michele Baisey, Principal
7989 Rocky Ridge Road
Thurmont, MD 21788
Fax 240-236-2801

30. **Tuscarora** ● **240-566-0000**
Dr. Kimberly Mazaleski, Principal
6321 Lambert Drive
Frederick, MD 21703
Fax 240-566-0001

31. **Twin Ridge** ◆ **240-236-2300**
Ms. Heather Hobbs Michael, Principal
1106 Leafy Hollow Circle
Mt. Airy, MD 21771
Fax 240-236-2301

32. **Urbana** ◆ **240-236-2200**
Ms. Tracy Hilliard, Principal
3554 Urbana Pike
Frederick, MD 21704
Fax 240-236-2201

33. **Valley** ● **240-236-3000**
Ms. Jennifer Hyde, Principal
3519 Jefferson Pike
Jefferson, MD 21755
Fax 240-236-3001

34. **Walkersville** ◗ **240-236-1000**
Ms. Christina McKeever, Principal
83 West Frederick Street
Walkersville, MD 21793
Fax 240-236-1050

35. **Waverley** ◗●◆ **240-236-3900**
Dr. Allie Watkins, Principal
201 Waverley Drive
Frederick, MD 21702
Fax 240-236-3901

36. **Whittier** ◗●◆ **240-236-3100**
Mr. Lorcán ÓhEithir, Principal
2400 Whittier Drive
Frederick, MD 21702
Fax 240-236-3101

37. **Wolfsville** **240-236-2250**
Ms. Linda Stuart, Principal
12520 Wolfsville Road
Myersville, MD 21773
Fax 240-236-2251

38. **Yellow Springs** **240-236-1700**
Ms. Susan Gullo, Principal
8717 Yellow Springs Road
Frederick, MD 21702
Fax 240-236-1701

Middle (continued)

50. **West Frederick** **240-236-4000**
Ms. Pattie Barnes, Principal
515 West Patrick Street
Frederick, MD 21701
Fax 240-236-4050

51. **Windsor Knolls** **240-236-5000**
Mr. Brian Vasquenza, Principal
11150 Windsor Road
Ijamsville, MD 21754
Fax 240-236-5001

HIGH

52. **Brunswick** **240-236-8600**
Mr. Michael Dillman, Principal
101 Cummings Drive
Brunswick, MD 21716
Fax 240-236-8601

53. **Catoctin** **240-236-8100**
Ms. Jennifer Clements, Principal
14745 Sabillasville Road
Thurmont, MD 21788
Fax 240-236-8101

54. **Frederick** **240-236-7000**
Dr. David Franceschina, Principal
650 Carroll Parkway
Frederick, MD 21701
Fax 240-236-7015

55. **Governor Thomas Johnson** **240-236-8200**
Ms. Tracey K. Kibler, Principal
1501 North Market Street
Frederick, MD 21701
Fax 240-236-8201

56. **Linganore** **240-566-9700**
Ms. Cynthia Hanlon, Principal
12013 Old Annapolis Road
Frederick, MD 21701
Fax 240-566-9701

57. **Middletown** **240-236-7400**
Mr. Bernard Quesada, Principal
200 Schoolhouse Drive
Middletown, MD 21769
Fax 240-236-7450

58. **Oakdale** **240-566-9400**
Ms. Lisa Smith, Principal
5850 Eaglehead Drive
Ijamsville, MD 21754
Fax 240-566-9401

59. **Tuscarora** **240-236-6400**
Mr. Christopher Berry, Principal
5312 Ballenger Creek Pike
Frederick, MD 21703
Fax 240-236-6401

KEY

- ◗ Half-day pre-kindergarten program available
- ● Full-day pre-kindergarten program available
- ◆ Special education pre-kindergarten available
- ★ STAR (Title I) Schools

MIDDLE

39. **Ballenger Creek** **240-236-5700**
Mr. Jay Schill, Principal
5525 Ballenger Creek Pike
Frederick, MD 21703
Fax 240-236-5701

40. **Brunswick** **240-236-5400**
Mr. Everett Warren, Principal
301 Cummings Drive
Brunswick, MD 21716
Fax 240-236-5401

41. **Crestwood** **240-566-9000**
Mr. Neal Case, Principal
7100 Foxcroft Drive
Frederick, MD 21703
Fax 240-566-9001

42. **Governor Thomas Johnson** **240-236-4900**
Ms. Maggie Gilgallon, Principal
1799 Schifferstadt Boulevard
Frederick, MD 21701
Fax 240-236-4901

43. **Middletown** **240-236-4200**
Mr. Paul Fer, Principal
100 Martha Mason Street
Middletown, MD 21769
Fax 240-236-4250

44. **Monocacy** **240-236-4700**
Mr. Reginald Gunter, Principal
8009 Opossumtown Pike
Frederick, MD 21702
Fax 240-236-4701

45. **New Market** **240-236-4600**
Ms. T.C. Suter, Principal
125 West Main Street
New Market, MD 21774
Fax 240-236-4650

46. **Oakdale** **240-236-5500**
Mr. Daniel Enck, Principal
5810 Oakdale School Road
Ijamsville, MD 21754
Fax 240-236-5501

47. **Thurmont** **240-236-5100**
Ms. Janine Smith, Principal
408 East Main Street
Thurmont, MD 21788
Fax 240-236-5101

48. **Urbana** **240-566-9200**
Mr. Andrew Kibler, Principal
3511 Pontius Court
Ijamsville, MD 21754
Fax 240-566-9201

49. **Walkersville** **240-236-4400**
Mr. Frank Vetter, Principal
55 West Frederick Street
Walkersville, MD 21793
Fax 240-236-4401

60. **Urbana** **240-236-7600**
Mr. David Kehne, Principal
3471 Campus Drive
Ijamsville, MD 21754
Fax 240-236-7601

61. **Walkersville** **240-236-7200**
Dr. Stephanie Ware, Principal
81 West Frederick Street
Walkersville, MD 21793
Fax 240-236-7250

OTHER

62. **Career and Technology Center** **240-236-8500**
Mr. Michael Concepcion, Principal
7922 Opossumtown Pike
Frederick, MD 21702
Fax 240-236-8501

63. **Carroll Creek Montessori Public Charter School *** **240-566-0600**
Ms. Marilyn Horan, Principal
7215 Corporate Court
Frederick, MD 21703
Fax 240-566-0601

64. **Frederick Classical Charter School** **240-236-1200**
Dr. Camille S. Bell, Principal
8445 Spires Way, Suite CC
Frederick, MD 21701
Fax 240-236-1201

65. **Frederick County Virtual School (includes Flexible Evening High School)** **240-236-8450**
TBD, Principal
c/o GTJMS
1799 Schifferstadt Boulevard
Room 116
Frederick, MD 21701
Fax 240-236-8451

66. **Heather Ridge School** **240-236-8000**
Ms. Elizabeth Stiffler, Principal
1445 Taney Avenue
Frederick, MD 21702
Fax 240-236-8001

67. **Monocacy Valley Montessori Public Charter School *** **240-236-6100**
Ms. Amy Dorman, Principal
217 Dill Avenue
Frederick, MD 21701
Fax 240-236-6101

68. **Rock Creek School** **240-236-8700**
Ms. Katie Buckley, Principal
191 Waverley Drive
Frederick, MD 21702
Fax 240-236-8701

STATE OF MARYLAND

DEPARTMENT OF LABOR
DIVISION OF LABOR AND INDUSTRY
PREVAILING WAGE SECTION
1100 N. Eutaw Street, Room 607
Baltimore, MD 21201
(410) 767-2342

11/17/2020

REQUEST FOR ADVERTISEMENT AND NOTICE TO PROCEED

Kim Miskell - Procurement Officer
Frederick County Public Schools
7446 Hayward Road
Frederick, MD 21702

Re: Lincoln A Elementary Roof Replacement

Project No: PSC #10.003.21

Enclosed please find the Prevailing Wage Determination and Instructions for Contractors for the project referenced above.

Upon advertisement for bid or proposal of this project, you are requested to submit to this office the date and name of publication in which such advertisement appeared.

Once awarded, you are further directed to submit to this office, the NOTICE TO PROCEED for the project, complete with the date of notice, the name of the general contractor, and the dollar amount of the project. In addition, we ask that a representative of the prevailing wage Unit be invited to attend the Pre-Construction Conference.

Any questions concerning this matter may be referred to PrevailingWage@dllr.state.md.us

Sincerely,

Enclosures
Wage Determination
Instruction for the Contractor

Prevailing Wage Unit

PREVAILING WAGE INSTRUCTIONS FOR THE CONTRACTOR & SUBCONTRACTOR

The contractor shall electronically submit completed copies of certified payroll records to the Commissioner of Labor & Industry, Prevailing Wage Unit by going on-line to https://www.dllr.state.md.us/prevwage and following the instructions for submitting payroll information (NOTE: A contractor must register prior to submitting on-line certified payroll information).

If you have technical questions regarding electronic submittal, contact the Department at dldliprevailingwage-dllr@maryland.gov.

All certified payroll records shall have an accurate week beginning and ending date. The contractor shall be responsible for certifying and submitting to the Commissioner of Labor and Industry, Prevailing Wage Unit all of their subcontractors' payroll records covering work performed directly at the work site. By certifying the payroll records, the contractor is attesting to the fact that the wage rates contained in the payroll records are not less than those established by the Commissioner as set forth in the contract, the classification set forth for each worker or apprentice conforms with the work performed, and the contractor or subcontractor has complied with the provisions of the law.

A contractor or subcontractor may make deductions that are (1) required by law; (2) required by a collective bargaining agreement between a bona fide labor organization and the contractor or subcontractor; or (3) contained in a written agreement between an employee and an employer undertaken at the beginning of employment, if the agreement is submitted by the employer to the public body awarding the public work and is approved by the public body as fair and reasonable.

A contractor or subcontractor is required to submit information on-line on their fringe benefit packages including a list of fringe benefits for each craft employed by the contractor or subcontractor, by benefit and hourly amount. Where fringe benefits are paid in cash to the employee or to an approved plan, fund, or program, the contribution is required to be indicated.

Payroll records must be electronically submitted and received within 14 calendar days after the end of each payroll period. If the contractor is delinquent in submitting payroll records, processing of partial payment estimates may be held in abeyance pending receipt of the records. In addition, if the contractor is delinquent in submitting the payroll records, the contractor shall be liable to the contracting public body for liquidated damages. The liquidated damages are $10.00 for each calendar day the records are late.

Only apprentices registered with the Maryland Apprenticeship and Training Council shall be employed on prevailing wage projects. Apprentices shall be paid a percentage of the determined journey person 's wage for the specific craft.

Overtime rates shall be paid by the contractor and any subcontractors under its contracts and agreements with their employees which in no event shall be less than time and one-half the prevailing hourly rate of wages for all hours worked in excess of ten (10) hours in any one calendar day; in excess of forty (40) hours per workweek; and work performed on Sundays and legal holidays.

Contractors and subcontractors employing a classification of worker for which a wage rate was not issued SHALL notify the Commissioner of Labor & Industry, Prevailing Wage Unit, for the purpose of obtaining the wage rate for said classification PRIOR TO BEING EMPLOYED on the project. To obtain a prevailing wage rate which was NOT listed on the Wage Determination, a contractor or subcontractor can look on the LABOR webpage under prevailing wage.

Contractors and subcontractors shall maintain a valid copy of proper State and county licenses that permit the contractor and a subcontractor to perform construction work in the State of Maryland. These licenses must be retained at the worksite and available for review upon request by the Commissioner of Labor and Industry’s designee.

**Each contractor under a public work contract subject to Section 17-219 shall:

1. Post a clearly legible statement of each prevailing wage rate to be paid under the public work contract; and
2. Keep the statement posted during the full time that any employee is employed on the public work contract.
3. The statement of prevailing wage rates shall be posted in a prominent and easily accessible place at the site of the public work.

****Penalty - Subject to Section 10-1001 of the State Goverment Article, the Commissioner may impose on a person that violates this section a civil penalty of up to $50.00 per violation.**

Under the Maryland Apprenticeship and Training Council requirements, consistent with proper supervision, training and continuity of employment and applicable provisions in collective bargaining agreements, a ratio of one journey person regularly employed to one apprentice shall be allowed. No deviation from this ratio shall be permitted without prior written approval from the Maryland Apprenticeship and Training Council.

Laborers may NOT assist mechanics in the performance of the mechanic's work, NOR USE TOOLS peculiar to established trades.

ALL contractors and subcontractors shall employ only competent workers and apprentices and may NOT employ any individual classified as a HELPER or TRAINEE on a prevailing wage project.

The State Apprenticeship and Training Fund (Fund) law provides that contractors and certain subcontractors performing work on certain public work contracts are required to make contributions toward apprenticeship. See §17-601 through 17-606, State Finance and Procurement, Annotated Code of Maryland. Contractors and subcontractors have three options where they can choose to make their contributions: (1) participate in a registered apprenticeship training program; (2) contribute to an organization that has a registered apprenticeship training program; or (3) contribute to the State Apprenticeship and Training Fund.

The Department of Labor (LABOR) is moving forward with final adoption of regulations. The regulations were published in the December 14, 2012 edition of the Maryland Register.

IMPORTANT: Please note that the obligations under this law will become effective on JULY 1, 2013. This law will require that contractors and certain subcontractors make contributions toward apprenticeship and report those contributions on their certified payroll records that they submit pursuant to the prevailing wage law.

The Department is offering outreach seminars to any interested parties including contractors, trade associations, and any other stakeholders. Please contact the Department at dldliprevailingwage-dllr@maryland.gov or (410) 767-2968 for seminar times and locations. In addition, information regarding this law will be provided at pre-construction meetings for projects covered by the Prevailing Wage law.

For additional information, contact:
Division of Labor and Industry
Maryland Apprenticeship and Traning
1100 North Eutaw Street, Room 606
Baltimore, Maryland 21201
(410) 767-2246
E-Mail Address: matp@dllr.state.md.us.

STATE OF MARYLAND

DEPARTMENT OF LABOR
DIVISION OF LABOR AND INDUSTRY
PREVAILING WAGE SECTION
1100 N. Eutaw Street, Room 607
Baltimore, MD 21201
(410) 767-2342

The wage rates to be paid laborers and mechanics for the locality described below is announced by order of Commissioner of Labor and Industry.

It is mandatory upon the successful bidder and any subcontractor under him, to pay not less than the specific rates to all workers employed by them in executing contracts in this locality. Reference: Annotated Code of Maryland State Finance and Procurement, Section 17-201 thru 17-226.

These wage rates were taken from the locality survey of 2019 for Frederick County, issued pursuant to the Commissioner's authority under State Finance and Procurement Article Section 17-209, Annotated Code of Maryland or subsequent modification.

**Note: If additional Prevailing Wage Rates are needed for this project beyond those listed below, contact the Prevailing Wage Unit. Phone: (410) 767-2342, email: prevailingwage@dllr.state.md.us.

Name and Title of Requesting Officer: Kim Miskell - Procurement Officer

Department, Agency or Bureau: Frederick County Public Schools
7446 Hayward Road Frederick, MD 21702

Project Number
PSC #10.003.21

Location and Description of work:

Frederick County: This project include the replacement of two roof sections totaling approximately 24,465 square feet of built-up roof.

Determination Number
45478

Date of Issue: Nov 17, 2020

BUILDING CONSTRUCTION

CLASSIFICATION	MODIFICATION REASON	BASIC HOURLY RATE	BORROWED FROM	FRINGE BENEFIT PAYMENT
BALANCING TECHNICIAN	AD	$40.77		$21.38
BRICKLAYER	AD	$32.00		$11.56
CARPENTER	AD	$26.66		$15.00
CARPENTER - SHORING SCAFFOLD BUILDER	AD	$26.66		$15.00
CARPET LAYER	AD	$29.22		$13.40
CEMENT MASON	AD	$25.00	031	$0.00
COMMUNICATION INSTALLER TECHNICIAN	AD	$28.05	031	$10.91
DRYWALL - SPACKLING, TAPING, & FINISHING	AD	$26.66		$15.00
ELECTRICIAN	AD	$37.25		$19.24
ELEVATOR MECHANIC	AD	$46.88		$39.37
FIREPROOFER - BY HAND	AD	$19.19	033	$4.69

FIREPROOFER - SPRAYER	AD	$25.68	033	$1.67
FIRESTOPPER	AD	$28.59	033	$7.53
GLAZIER	AD	$31.26	033	$12.50
INSULATION WORKER	AD	$35.13		$15.37
IRONWORKER - FENCE ERECTOR	AD	$20.17		$0.00
IRONWORKER - ORNAMENTAL	AD	$32.50	033	$22.39
IRONWORKER - REINFORCING	AD	$27.95	033	$20.16
IRONWORKER - STRUCTURAL	AD	$32.50	033	$22.39
MILLWRIGHT	AD	$34.49	033	$13.25
PAINTER	AD	$25.20		$10.42
PILEDRIVER	AD	$31.89	033	$11.98
PLASTERER	AD	$29.70	033	$7.48
PLASTERER - MIXER	AD	$18.50	031	$4.24
PLUMBER	AD	$40.10		$20.31
POWER EQUIPMENT OPERATOR - ASPHALT DISTRIBUTOR	AD	$33.68		$10.32
POWER EQUIPMENT OPERATOR - BACKHOE	AD	$21.00		$6.08
POWER EQUIPMENT OPERATOR - BROOM / SWEEPER	AD	$24.32	031	$9.43
POWER EQUIPMENT OPERATOR - BULLDOZER	AD	$29.05	033	$12.10
POWER EQUIPMENT OPERATOR - CRANE	AD	$35.70		$15.90
POWER EQUIPMENT OPERATOR - DRILL - RIG	AD	$38.44	033	$9.50
POWER EQUIPMENT OPERATOR - EXCAVATOR	AD	$30.23		$13.17
POWER EQUIPMENT OPERATOR - FORKLIFT	AD	$35.00	033	$7.00
POWER EQUIPMENT OPERATOR - GRADALL	AD	$29.00	033	$0.00
POWER EQUIPMENT OPERATOR - HOIST	AD	$24.68	031	$12.97
POWER EQUIPMENT OPERATOR - LOADER	AD	$29.61		$8.75
POWER EQUIPMENT OPERATOR - MILLING MACHINE	AD	$17.61	031	$5.59
POWER EQUIPMENT OPERATOR - PAVER	AD	$17.47	031	$6.36
POWER EQUIPMENT OPERATOR - ROLLER - ASPHALT	AD	$21.35	031	$5.38
POWER EQUIPMENT OPERATOR - ROLLER - EARTH	AD	$22.80	033	$0.00
POWER EQUIPMENT OPERATOR - SCRAPER	AD	$16.50	033	$0.00
POWER EQUIPMENT OPERATOR - SCREED	AD	$17.00	031	$0.25
POWER EQUIPMENT OPERATOR - SKID STEER (BOBCAT)	AD	$29.23		$13.17
POWER EQUIPMENT OPERATOR - SKIDDER	AD	$28.73	033	$8.65
POWER EQUIPMENT OPERATOR - TRIMMER	AD	$36.69		$0.00
POWER EQUIPMENT OPERATOR-VACCUM TRUCK	AD	$26.00	033	$3.24
RESILIENT FLOOR	AD	$29.22		$13.40
ROOFER/WATERPROOFER	AD	$20.21	031	$1.85
SHEETMETAL WORKER (INCLUDING METAL ROOFING)	AD	$40.77		$21.38
SPRINKLERFITTER	AD	$29.86	033	$18.99
STEAMFITTER/PIPEFITTER	AD	$40.10		$20.31
STONE MASON	AD	$38.81	033	$18.29
TILE & TERRAZZO FINISHER	AD	$24.10		$11.24
TILE & TERRAZZO MECHANIC	AD	$29.12		$12.27
TRUCK DRIVER - DUMP	AD	$19.57	031	$1.06
TRUCK DRIVER - DUMP - ARTICULATING	AD	$23.00	033	$7.32
TRUCK DRIVER - LOWBOY	AD	$25.25	031	$8.56

TRUCK DRIVER - TACK/TAR TRUCK	AD	$20.00	031	$0.25
TRUCK DRIVER - TANDEM	AD	$27.60	033	$6.98
TRUCK DRIVER - WATER	AD	$18.50		$2.61
LABORER GROUP II				
LABORER - ASPHALT RAKER	AD	$21.18		$5.09
LABORER - COMMON	AD	$21.18		$5.09
LABORER - CONCRETE PUDDLER	AD	$21.18		$5.09
LABORER - CONCRETE TENDER	AD	$21.18		$5.09
LABORER - CONCRETE VIBRATOR	AD	$21.18		$5.09
LABORER - DENSITY GAUGE	AD	$21.18		$5.09
LABORER - FIREPROOFER - MIXER	AD	$21.18		$5.09
LABORER - FLAGGER	AD	$21.18		$5.09
LABORER - GRADE CHECKER	AD	$21.18		$5.09
LABORER - HAND ROLLER	AD	$21.18		$5.09
LABORER - JACKHAMMER	AD	$21.18		$5.09
LABORER - LANDSCAPING	AD	$21.18		$5.09
LABORER - LAYOUT	AD	$21.18		$5.09
LABORER - LUTEMAN	AD	$21.18		$5.09
LABORER - MORTAR MIXER	AD	$21.18		$5.09
LABORER - PLASTERER - HANDLER	AD	$21.18		$5.09
LABORER - TAMPER	AD	$21.18		$5.09
LABORERS GROUP I				
LABORER - AIR TOOL OPERATOR	AD	$25.05	033	$8.91
LABORER - ASPHALT PAVER	AD	$25.05	033	$8.91
LABORER - BLASTER - DYNAMITE	AD	$25.05	033	$8.91
LABORER - BURNER	AD	$25.05	033	$8.91
LABORER - CONCRETE SURFACER	AD	$25.05	033	$8.91
LABORER - HAZARDOUS MATERIAL HANDLER	AD	$25.05	033	$8.91
LABORER - MASON TENDER	AD	$25.05	033	$8.91
LABORER - PIPELAYER	AD	$25.05	033	$8.91
LABORER - SCAFFOLD BUILDER	AD	$25.05	033	$8.91

Incidental Craft Data: Caulker, Man Lift Operator, Rigger, Scaffold Builder, and Welder receive the wage and fringe rates prescribed for the craft performing the operation to which welding, scaffold building, rigging, operating a Man Lift, or caulking is incidental.

These **Informational Prevailing Wage Rates** may not be substituted for the requirements of pre-advertisement or onsite job posting for a public work contract that exceeds $500,000 in value and either of the following criteria are met: (1) the contracting body is a unit of State government or an instrumentality of the State and there is any State funding for the project; or (2) the contracting body is a political subdivision, agency, person or entity (such as a county) and the State funds 50% or more of the project.

Modification Codes:

(AD) 17-209 Annual Determination from Survey Wage Data Received
(CH) 17-211 Commissioners' Hearing
(CR) 17-208 Commissioners' Review
(SR) 17-208 Survey Review by Staff

Each "Borrowed From" county is identified with the FIPS 3-digit county code unique for the specific jurisdiction in Maryland.

For additional information on the FIPS (Federal Information Processing Standard) code, see http://www.census.gov/datamap/fipslist/AllSt.txt

The Prevailing Wage rates appearing on this form were originally derived from Maryland's annual Wage Survey. The Commissioner of Labor & Industry encourages all contractors and interested groups to participate in the voluntary Wage Survey, detailing wage rates paid to workers on various types of construction throughout Maryland.

A mail list of both street and email addresses is maintained by the Prevailing Wage Unit to enable up-to-date prevailing wage information, including Wage Survey notices to be sent to contractors and other interested parties. If you would like to be included in the mailing list, please forward (1) your Name, (2) the name of your company (if applicable), (3) your complete postal mailing address, (4) your email address and (5) your telephone number to PWMAILINGLIST@dllr.state.md.us. Requests for inclusion can also be mailed to: Prevailing Wage, 1100 N. Eutaw Street - Room 607, Baltimore MD 21201-2201.

AIA® Document A701™ – 2018

Instructions to Bidders

for the following Project:
(Name, location, and detailed description)

Lincoln "A" Facility
Roof Replacement
250 Madison Street
Frederick, Maryland 21701
FCPS Bid 21C5

THE OWNER:
(Name, legal status, address, and other information)

The Board of Education of Frederick County
191 South East Street
Frederick, Maryland 21701-5918

THE ARCHITECT:
(Name, legal status, address, and other information)

Bushey Feight Morin Architects
473 North Potomac Street
Hagerstown, Maryland 21740
Telephone Number: (301) 733-5600
Fax Number: (301) 733-5612

TABLE OF ARTICLES

1 DEFINITIONS

2 BIDDER'S REPRESENTATIONS

3 BIDDING DOCUMENTS

4 BIDDING PROCEDURES

5 CONSIDERATION OF BIDS

6 POST-BID INFORMATION

7 PERFORMANCE BOND AND PAYMENT BOND

8 FORM OF AGREEMENT BETWEEN OWNER AND CONTRACTOR

ADDITIONS AND DELETIONS:
The author of this document has added information needed for its completion. The author may also have revised the text of the original AIA standard form. An *Additions and Deletions Report* that notes added information as well as revisions to the standard form text is available from the author and should be reviewed. A vertical line in the left margin of this document indicates where the author has added necessary information and where the author has added to or deleted from the original AIA text.

This document has important legal consequences. Consultation with an attorney is encouraged with respect to its completion or modification.

FEDERAL, STATE, AND LOCAL LAWS MAY IMPOSE REQUIREMENTS ON PUBLIC PROCUREMENT CONTRACTS. CONSULT LOCAL AUTHORITIES OR AN ATTORNEY TO VERIFY REQUIREMENTS APPLICABLE TO THIS PROCUREMENT BEFORE COMPLETING THIS FORM.

It is intended that AIA Document G612™–2017, Owner's Instructions to the Architect, Parts A and B will be completed prior to using this document.

AIA Document A701™ – 2018. Copyright © 1970, 1974, 1978, 1987, 1997 and 2018 by The American Institute of Architects. All rights reserved. The "American Institute of Architects," "AIA," the AIA Logo, and "AIA Contract Documents" are registered trademarks and may not be used without permission. This document was produced by AIA software at 12:16:24 ET on 11/11/2020 under Order No.6115176972 which expires on 09/19/2021, is not for resale, is licensed for one-time use only, and may only be used in accordance with the AIA Contract Documents® Terms of Service. To report copyright violations, e-mail copyright@aia.org.
User Notes: (1449359471)

ARTICLE 1 DEFINITIONS

§ 1.1 Bidding Documents include the Bidding Requirements and the Proposed Contract Documents. The Bidding Requirements consist of the advertisement or invitation to bid, Instructions to Bidders, supplementary instructions to bidders, the bid form, and any other bidding forms. The Proposed Contract Documents consist of the unexecuted form of Agreement between the Owner and Contractor and that Agreement's Exhibits, Conditions of the Contract (General, Supplementary and other Conditions), Drawings, Specifications, all Addenda issued prior to execution of the Contract.

§ 1.2 Definitions set forth in the General Conditions of the Contract for Construction, or in other Proposed Contract Documents apply to the Bidding Documents.

§ 1.3 Addenda are written or graphic instruments issued by the Architect, which, by additions, deletions, clarifications, or corrections, modify or interpret the Bidding Documents.

§ 1.4 A Bid is a complete and properly executed proposal to do the Work for the sums stipulated therein, submitted in accordance with the Bidding Documents including Addenda.

§ 1.5 The Base Bid is the sum stated in the Bid for which the Bidder offers to perform the Work described in the Bidding Documents, to which Work may be added or deleted by sums stated in Alternate Bids.

§ 1.6 An Alternate Bid (or Alternate) is an amount stated in the Bid to be added to or deducted from, or that does not change, the Base Bid if the corresponding change in the Work, as described in the Bidding Documents, is accepted.

§ 1.7 A Unit Price is an amount stated in the Bid as a price per unit of measurement for materials, equipment, or services, or a portion of the Work, as described in the Bidding Documents.

§ 1.8 A Bidder is a person or entity who submits a Bid and who meets the requirements set forth in the Bidding Documents.

§ 1.9 A Sub-bidder is a person or entity who submits a bid to a Bidder for materials, equipment, or labor for a portion of the Work.

ARTICLE 2 BIDDER'S REPRESENTATIONS

§ 2.1 By submitting a Bid, the Bidder represents that:

- **.1** the Bidder has read and understands the Bidding Documents;
- **.2** the Bidder understands how the Bidding Documents relate to other portions of the Project, if any, being bid concurrently or presently under construction;
- **.3** the Bid complies with the Bidding Documents;
- **.4** the Bidder has visited the site, become familiar with local conditions under which the Work is to be performed, and has correlated the Bidder's observations with the requirements of the Proposed Contract Documents;
- **.5** the Bid is based upon the materials, equipment, and systems required by the Bidding Documents without exception; and
- **.6** the Bidder has read and understands the provisions for liquidated damages, if any, set forth in the form of Agreement between the Owner and Contractor.

ARTICLE 3 BIDDING DOCUMENTS

§ 3.1 Distribution

§ 3.1.1 Bidders may obtain complete sets of the Bidding Documents from the issuing office designated in the Advertisement or Invitation to Bid.

(Indicate how, su
Documents.)

.

§ 3.1.2 Bidders shall use complete Bidding Documents in preparing Bids. Neither the Owner nor Architect assumes responsibility for errors or misinterpretations resulting from the use of incomplete Bidding Documents.

AIA Document A701™ – 2018. Copyright © 1970, 1974, 1978, 1987, 1997 and 2018 by The American Institute of Architects. All rights reserved. The "American Institute of Architects," "AIA," the AIA Logo, and "AIA Contract Documents" are registered trademarks and may not be used without permission. This document was produced by AIA software at 12:16:24 ET on 11/11/2020 under Order No.6115176972 which expires on 09/19/2021, is not for resale, is licensed for one-time use only, and may only be used in accordance with the AIA Contract Documents® Terms of Service. To report copyright violations, e-mail copyright@aia.org.
User Notes: (1449359471)

(Paragraphs deleted)

§ 3.1.3 The Bidding Documents will be available for the sole purpose of obtaining Bids on the Work. No license or grant of use is conferred by distribution of the Bidding Documents.

§ 3.2 Modification or Interpretation of Bidding Documents

§ 3.2.1 The Bidder shall carefully study and compare the Bidding Documents with each other, and with other work being bid concurrently or presently under construction to the extent that it relates to the Work for which the Bid is submitted, shall examine the site and local conditions, and shall at once report to the Architect errors, inconsistencies or ambiguities discovered.

§ 3.2.2 Requests for clarification or interpretation of the Bidding Documents shall be submitted by the Bidder in writing and shall be received by the Architect at least seven days prior to the date for receipt of Bids.

(Indicate how, such as by e-
clarification and interpretation.)

§ 3.2.3 Modifications and interpretations of the Bidding Documents shall be made by Addendum. Modifications and interpretations of the Bidding Documents made in any other manner shall not be binding, and Bidders shall not rely upon them.

§ 3.3 Substitutions

§ 3.3.1 The materials, products, and equipment described in the Bidding Documents establish a standard of required function, dimension, appearance, and quality to be met by any proposed substitution.

§ 3.3.2 Substitution Process

§ 3.3.2.1 Written requests for substitutions shall be received by the Architect at least ten days prior to the date for receipt of Bids. Requests shall be submitted in the same manner as that established for submitting clarifications and interpretations in Section 3.2.2.

§ 3.3.2.2 Bidders shall submit substitution requests on a Substitution Request Form if one is provided in the Bidding Documents.

§ 3.3.2.3 If a Substitution Request Form is not provided, requests shall include (1) the name of the material or equipment specified in the Bidding Documents; (2) the reason for the requested substitution; (3) a complete description of the proposed substitution including the name of the material or equipment proposed as the substitute, performance and test data, and relevant drawings; and (4) any other information necessary for an evaluation. The request shall include a statement setting forth changes in other materials, equipment, or other portions of the Work, including changes in the work of other contracts or the impact on any Project Certifications (such as LEED), that will result from incorporation of the proposed substitution.

§ 3.3.3 The burden of proof of the merit of the proposed substitution is upon the proposer. The Architect's decision of approval or disapproval of a proposed substitution shall be final.

§ 3.3.4 If the Architect approves a proposed substitution prior to receipt of Bids, such approval shall be set forth in an Addendum. Approvals made in any other manner shall not be binding, and Bidders shall not rely upon them.

§ 3.3.5 No substitutions will be considered after the Contract award unless specifically provided for in the Contract Documents.

§ 3.4 Addenda

§ 3.4.1 Addenda will be available to all who are known by the issuing office to have received a complete set of Bidding Documents at no charge, unless the addenda is informational and does not affect in any way the fit, form or function of any technical and design of this project. In that case, the potential contractor will be responsible for any printing costs.

§ 3.4.2 Addenda will be available where Bidding Documents are on file.

AIA Document A701™ – 2018. Copyright © 1970, 1974, 1978, 1987, 1997 and 2018 by The American Institute of Architects. All rights reserved. The "American Institute of Architects," "AIA," the AIA Logo, and "AIA Contract Documents" are registered trademarks and may not be used without permission. This document was produced by AIA software at 12:16:24 ET on 11/11/2020 under Order No.6115176972 which expires on 09/19/2021, is not for resale, is licensed for one-time use only, and may only be used in accordance with the AIA Contract Documents® Terms of Service. To report copyright violations, e-mail copyright@aia.org.
User Notes: (1449359471)

§ 3.4.3 Addenda will be issued no later than four days prior to the date for receipt of Bids, except an Addendum withdrawing the request for Bids or one which includes postponement of the date for receipt of Bids.

§ 3.4.4 Prior to submitting a Bid, each Bidder shall ascertain that the Bidder has received all Addenda issued, and the Bidder shall acknowledge their receipt in the Bid.

ARTICLE 4 BIDDING PROCEDURES

§ 4.1 Preparation of Bids

§ 4.1.1 Bids shall be submitted on the forms included with or identified in the Bidding Documents.

§ 4.1.2 All blanks on the bid form shall be legibly executed. Paper bid forms shall be executed in a non-erasable medium.

§ 4.1.3 Sums shall be expressed in both words and numbers, unless noted otherwise on the bid form. In case of discrepancy, the amount entered in words shall govern.

§ 4.1.4 Edits to entries made on paper bid forms must be initialed by the signer of the Bid.

§ 4.1.5 All requested Alternates shall be bid. If no change in the Base Bid is required, enter "No Change" or as required by the bid form.

§ 4.1.6 Where two or more Bids for designated portions of the Work have been requested, the Bidder may, without forfeiture of the bid security, state the Bidder's refusal to accept award of less than the combination of Bids stipulated by the Bidder. The Bidder shall make no additional stipulations on the bid form nor qualify the Bid in any other manner.

§ 4.1.7 Each copy of the Bid shall state the legal name and legal status of the Bidder. As part of the documentation submitted with the Bid, the Bidder shall provide evidence of its legal authority to perform the Work in the jurisdiction where the Project is located. Each copy of the Bid shall be signed by the person or persons legally authorized to bind the Bidder to a contract. A Bid by a corporation shall further name the state of incorporation and have the corporate seal affixed. A Bid submitted by an agent shall have a current power of attorney attached, certifying the agent's authority to bind the Bidder.

§ 4.1.8 A Bidder shall incur all costs associated with the preparation of its Bid.

§ 4.2 Bid Security

§ 4.2.1 Each Bid shall be accompanied by a bid security in the form and amount required as stipulated in the Instructions to Bidders. The Bidder pledges to enter into a Contract with the Owner on the terms stated in the Bid and will, if required, furnish bonds covering the faithful performance of the Contract and payment of all obligations arising thereunder. Should the Bidder refuse to enter into such Contract or fail to furnish such bonds if required, the amount of the bid security shall be forfeited to the Owner as liquidated damages, not as a penalty. The amount of the bid security shall not be forfeited to the Owner in the event the Owner fails to comply with Section 6.2.

[illegible] amount of bid

§ 4.2.2 The surety bond that is required as bid security, shall be written on AIA Document A310™, Bid Bond, unless otherwise provided in the Bidding Documents. The attorney-in-fact who executes the bond on behalf of the surety shall affix to the bond a certified and current copy of an acceptable power of attorney. The Bidder shall provide surety bonds from a company or companies lawfully authorized to issue surety bonds in the jurisdiction where the Project is located.

§ 4.2.3 The Owner will have the right to retain the bid security of Bidders to whom an award is being considered until (a) the Contract has been executed and bonds, if required, have been furnished; (b) the specified time has elapsed so that Bids may be withdrawn; or (c) all Bids have been rejected.

(Paragraph deleted)

§ 4.3 Submission of Bids

§ 4.3.1 All copies of the Bid, the bid security, if any, and any other documents required to be submitted with the Bid shall be enclosed in a sealed opaque envelope. The envelope shall be addressed to the party receiving the Bids and shall be

AIA Document A701™ – 2018. Copyright © 1970, 1974, 1978, 1987, 1997 and 2018 by The American Institute of Architects. All rights reserved. The "American Institute of Architects," "AIA," the AIA Logo, and "AIA Contract Documents" are registered trademarks and may not be used without permission. This document was produced by AIA software at 12:16:24 ET on 11/11/2020 under Order No.6115176972 which expires on 09/19/2021, is not for resale, is licensed for one-time use only, and may only be used in accordance with the AIA Contract Documents® Terms of Service. To report copyright violations, e-mail copyright@aia.org.
User Notes: (1449359471)

identified with the Project name, the Bidder's name and address and, if applicable, the designated portion of the Work for which the Bid is submitted. If the Bid is sent by mail, the sealed envelope shall be enclosed in a separate mailing envelope with the notation "SEALED BID ENCLOSED" on the face thereof.

(Indicate l

§ 4.3.2 Bids shall be submitted by the date and time and at the place indicated in the invitation to bid. Bids submitted after the date and time for receipt of Bids, or at an incorrect place, will not be accepted and will be returned unopened.

§ 4.3.3 The Bidder shall assume full responsibility for timely delivery at the location designated for receipt of Bids.

§ 4.3.4 A Bid submitted by any method other than as provided in this Section 4.3 will not be accepted.

(Paragraph deleted)

§ 4.4 Modification or Withdrawal of Bid

§ 4.4.1 A Bid may not be modified, withdrawn or canceled by the Bidder during the stipulated time period following the time and date designated for the receipt of Bids, and each Bidder so agrees in submitting a Bid.

§ 4.4.2 Prior to the date and time designated for receipt of Bids, a Bidder may submit a new Bid to replace a Bid previously submitted, or withdraw its Bid entirely, by notice to the party designated to receive the Bids. Such notice shall be received and duly recorded by the receiving party on or before the date and time set for receipt of Bids. The receiving party shall verify that replaced or withdrawn Bids are removed from the other submitted Bids and not considered. Notice of submission of a replacement Bid or withdrawal of a Bid shall be worded so as not to reveal the amount of the original Bid.

§ 4.4.3 Withdrawn Bids may be resubmitted up to the date and time designated for the receipt of Bids in the same format as that established in Section 4.3, provided they fully conform with these Instructions to Bidders. Bid security shall be in an amount sufficient for the Bid as resubmitted.

§ 4.4.4 After the date and time designated for receipt of Bids, a Bidder who discovers that it made a clerical error in its Bid shall notify the Owner of such error within twenty-four hours requesting withdrawal of its Bid. Upon providing evidence of such error to the reasonable satisfaction of the Owner, the Bid shall be withdrawn and not resubmitted. If a Bid is withdrawn pursuant to this Section 4.4.3, the bid security may be retained at the Owner's discretion.

(St

ARTICLE 5 CONSIDERATION OF BIDS

§ 5.1 Opening of Bids

If stipulated in an advertisement or invitation to bid, or when otherwise required by law, Bids properly identified and received within the specified time limits will be publicly opened and read aloud. A summary of the Bids may be made available to Bidders.

§ 5.2 Rejection of Bids

Unless otherwise prohibited by law, the Owner shall have the right to reject any or all Bids.

§ 5.3 Acceptance of Bid (Award)

§ 5.3.1 It is the intent of the Owner to award a Contract to the lowest responsive and responsible Bidder, provided the Bid has been submitted in accordance with the requirements of the Bidding Documents. Unless otherwise prohibited by law, the Owner shall have the right to waive informalities and irregularities in a Bid received and to accept the Bid which, in the Owner's judgment, is in the Owner's best interests.

§ 5.3.2 Unless otherwise prohibited by law, the Owner shall have the right to accept Alternates in any order or combination, unless otherwise specifically provided in the Bidding Documents, and to determine the lowest responsive and responsible Bidder on the basis of the sum of the Base Bid and Alternates accepted.

AIA Document A701™ – 2018. Copyright © 1970, 1974, 1978, 1987, 1997 and 2018 by The American Institute of Architects. All rights reserved. The "American Institute of Architects," "AIA," the AIA Logo, and "AIA Contract Documents" are registered trademarks and may not be used without permission. This document was produced by AIA software at 12:16:24 ET on 11/11/2020 under Order No.6115176972 which expires on 09/19/2021, is not for resale, is licensed for one-time use only, and may only be used in accordance with the AIA Contract Documents® Terms of Service. To report copyright violations, e-mail copyright@aia.org.
User Notes: (1449359471)

ARTICLE 6 POST-BID INFORMATION

§ 6.1 Contractor's Qualification Statement

Bidders to whom award of a Contract is under consideration shall submit to the Owner, upon request and within the timeframe specified by the Owner, a properly executed AIA Document A305™, Contractor's Qualification Statement, unless such a Statement has been previously required and submitted for this Bid.

§ 6.2 Submittals

(Paragraphs deleted)

§ 6.2.1 After notification of selection for the award of the Contract, the Bidder shall, as soon as practicable or as stipulated in the Bidding Documents, submit in writing to the Owner:

- **.1** a designation of the Work to be performed with the Bidder's own forces;
- **.2** names of the principal products and systems proposed for the Work and the manufacturers and suppliers of each; and
- **.3** names of persons or entities (including those who are to furnish materials or equipment fabricated to a special design) proposed for the principal portions of the Work.

§ 6.2.2 The Bidder will be required to establish to the satisfaction of the Owner the reliability and responsibility of the persons or entities proposed to furnish and perform the Work described in the Bidding Documents.

§ 6.2.3 Prior to the execution of the Contract, the Owner will notify the Bidder after due investigation, has reasonable objection to a person or entity proposed by the Bidder. If the Owner has reasonable objection to a proposed person or entity, the Bidder may, at the Bidder's option, withdraw the Bid or submit an acceptable substitute person or entity. The Bidder may also submit any required adjustment in the Base Bid or Alternate Bid to account for the difference in cost occasioned by such substitution. The Owner may accept the adjusted bid price or disqualify the Bidder. In the event of either withdrawal or disqualification, bid security will not be forfeited.

§ 6.2.4 Persons and entities proposed by the Bidder and to whom the Owner have made no reasonable objection must be used on the Work for which they were proposed and shall not be changed except with the written consent of the Owner.

ARTICLE 7 PERFORMANCE BOND AND PAYMENT BOND

§ 7.1 Bond Requirements

§ 7.1.1 If stipulated in the Bidding Documents, the Bidder shall furnish bonds covering the faithful performance of the Contract and payment of all obligations arising thereunder.

§ 7.1.2 If the furnishing of such bonds is stipulated in the Bidding Documents, the cost shall be included in the Bid. If the furnishing of such bonds is required after receipt of bids and before execution of the Contract, the cost of such bonds shall be added to the Bid in determining the Contract Sum.

§ 7.1.3 The Bidder shall provide surety bonds from a company or companies lawfully authorized to issue surety bonds in the jurisdiction where the Project is located.

§ 7.1.4 Unless otherwise indicated below, the Penal Sum of the Payment and Performance Bonds shall be the amount of the Contract Sum.
(If Payment or Performance Bonds are to be in an amount other than 100% of the Contract Sum, indicate the dollar amount or percentage of the Contract Sum.)

§ 7.2 Time of Delivery and Form of Bonds

§ 7.2.1 The Bidder shall deliver the required bonds to the Owner not later than ten days following the date of the Official Notice to Award. If the Work is to commence sooner in response to a letter of intent, the Bidder shall, prior to commencement of the Work, submit evidence satisfactory to the Owner that such bonds will be furnished and delivered in accordance with this Section 7.2.1.

AIA Document A701™ – 2018. Copyright © 1970, 1974, 1978, 1987, 1997 and 2018 by The American Institute of Architects. All rights reserved. The "American Institute of Architects," "AIA," the AIA Logo, and "AIA Contract Documents" are registered trademarks and may not be used without permission. This document was produced by AIA software at 12:16:24 ET on 11/11/2020 under Order No.6115176972 which expires on 09/19/2021, is not for resale, is licensed for one-time use only, and may only be used in accordance with the AIA Contract Documents® Terms of Service. To report copyright violations, e-mail copyright@aia.org.
User Notes: (1449359471)

§ 7.2.2 Unless otherwise provided, the bonds shall be written on Comar Document 21.07.02.10, Performance Bond and Payment Bond.

§ 7.2.3 The bonds shall be dated on or after the date of the Contract.

§ 7.2.4 The Bidder shall require the attorney-in-fact who executes the required bonds on behalf of the surety to affix to the bond a certified and current copy of the power of attorney.

ARTICLE 8 FORM OF AGREEMENT BETWEEN OWNER AND CONTRACTOR

Unless otherwise required in the Bidding Documents, the Agreement for the work will be written on AIA Document A101, Standard Form of Agreement Between Owner and Contractor Where the Basis of Payment is a Stipulated Sum and AIA Document A201, General Conditions of the Contract for Construction as modified by Frederick County Public Schools.

(Table deleted)(Paragraphs deleted)(Paragraphs deleted)

AIA Document A701™ – 2018. Copyright © 1970, 1974, 1978, 1987, 1997 and 2018 by The American Institute of Architects. All rights reserved. The "American Institute of Architects," "AIA," the AIA Logo, and "AIA Contract Documents" are registered trademarks and may not be used without permission. This document was produced by AIA software at 12:16:24 ET on 11/11/2020 under Order No.6115176972 which expires on 09/19/2021, is not for resale, is licensed for one-time use only, and may only be used in accordance with the AIA Contract Documents® Terms of Service. To report copyright violations, e-mail copyright@aia.org.
User Notes: (1449359471)

Additions and Deletions Report for

AIA® Document A701™ – 2018

This Additions and Deletions Report, as defined on page 1 of the associated document, reproduces below all text the author has added to the standard form AIA document in order to complete it, as well as any text the author may have added to or deleted from the original AIA text. Added text is shown underlined. Deleted text is indicated with a horizontal line through the original AIA text.

Note: This Additions and Deletions Report is provided for information purposes only and is not incorporated into or constitute any part of the associated AIA document. This Additions and Deletions Report and its associated document were generated simultaneously by AIA software at 12:16:24 ET on 11/11/2020.

PAGE 1

(Name, location, and detailed description)

Lincoln "A" Facility
Roof Replacement
250 Madison Street
Frederick, Maryland 21701
FCPS Bid 21C5

...

The Board of Education of Frederick County
191 South East Street
Frederick, Maryland 21701-5918

...

Bushey Feight Morin Architects
473 North Potomac Street
Hagerstown, Maryland 21740
Telephone Number: (301) 733-5600
Fax Number: (301) 733-5612

...

8 ~~ENUMERATION OF THE PROPOSED CONTRACT DOCUMENTS~~FORM OF AGREEMENT BETWEEN OWNER AND CONTRACTOR

PAGE 2

§ 1.1 Bidding Documents include the Bidding Requirements and the Proposed Contract Documents. The Bidding Requirements consist of the advertisement or invitation to bid, Instructions to Bidders, supplementary instructions to bidders, the bid form, and any other bidding forms. The Proposed Contract Documents consist of the unexecuted form of Agreement between the Owner and Contractor and that Agreement's Exhibits, Conditions of the Contract (General, Supplementary and other Conditions), Drawings, Specifications, all ~~Addenda, and all other documents enumerated in Article 8 of these Instructions.~~Addenda issued prior to execution of the Contract.

...

§ 1.4 A Bid is a complete and properly executed proposal to do the Work for the sums stipulated therein, submitted in accordance with the Bidding ~~Documents.~~Documents including Addenda.

...

Additions and Deletions Report for AIA Document A701™ – 2018. Copyright © 1970, 1974, 1978, 1987, 1997 and 2018 by The American Institute of Architects. All rights reserved. The "American Institute of Architects," "AIA," the AIA Logo, and "AIA Contract Documents" are registered trademarks and may not be used without permission. This document was produced by AIA software at 12:16:24 ET on 11/11/2020 under Order No.6115176972 which expires on 09/19/2021, is not for resale, is licensed for one-time use only, and may only be used in accordance with the AIA Contract Documents® Terms of Service. To report copyright violations, e-mail copyright@aia.org.
User Notes:

§ 3.1.1 Bidders ~~shall obtain complete Bidding Documents, as indicated below,~~ may obtain complete sets of the Bidding Documents from the issuing office designated in the ~~advertisement or invitation to bid, for the deposit sum, if any, stated therein.~~Advertisement or Invitation to Bid.

...

.

§ 3.1.2 ~~Any required deposit shall be refunded to Bidders who submit a bona fide Bid and return the paper Bidding Documents in good condition within ten days after receipt of Bids. The cost to replace missing or damaged paper documents will be deducted from the deposit. A Bidder receiving a Contract award may retain the paper Bidding Documents, and the Bidder's deposit will be refunded.~~Bidders shall use complete Bidding Documents in preparing Bids. Neither the Owner nor Architect assumes responsibility for errors or misinterpretations resulting from the use of incomplete Bidding Documents.

~~**§ 3.1.3** Bidding Documents will not be issued directly to Sub-bidders unless specifically offered in the advertisement or invitation to bid, or in supplementary instructions to bidders.~~

~~**§ 3.1.4** Bidders shall use complete Bidding Documents in preparing Bids. Neither the Owner nor Architect assumes responsibility for errors or misinterpretations resulting from the use of incomplete Bidding Documents.~~

§ ~~3.1.5~~ 3.1.3 The Bidding Documents will be available for the sole purpose of obtaining Bids on the Work. No license or grant of use is conferred by distribution of the Bidding Documents.

PAGE 3

§ 3.2.1 The Bidder shall carefully study ~~the Bidding Documents,~~ and compare the Bidding Documents with each other, and with other work being bid concurrently or presently under construction to the extent that it relates to the Work for which the Bid is submitted, shall examine the site and local conditions, and shall ~~notify the Architect of errors, inconsistencies, or ambiguities discovered and request clarification or interpretation pursuant to Section 3.2.2.~~at once report to the Architect errors, inconsistencies or ambiguities discovered.

...

§ 3.4.1 Addenda will be ~~transmitted to Bidders~~ available to all who are known by the issuing office to have received ~~complete Bidding Documents.~~a complete set of Bidding Documents at no charge, unless the addenda is informational and does not affect in any way the fit, form or function of any technical and design of this project. In that case, the potential contractor will be responsible for any printing costs.

PAGE 4

§ 4.1.6 Where two or more Bids for designated portions of the Work have been requested, the Bidder may, without forfeiture of the bid security, state the Bidder's refusal to accept award of less than the combination of Bids stipulated by the Bidder. The Bidder shall ~~neither~~ make no additional stipulations on the bid form nor qualify the Bid in any other manner.

...

§ 4.2.1 Each Bid shall be accompanied by ~~the following bid security:~~a bid security in the form and amount required as stipulated in the Instructions to Bidders. The Bidder pledges to enter into a Contract with the Owner on the terms stated in the Bid and will, if required, furnish bonds covering the faithful performance of the Contract and payment of all obligations arising thereunder. Should the Bidder refuse to enter into such Contract or fail to furnish such bonds if required, the amount of the bid security shall be forfeited to the Owner as liquidated damages, not as a penalty. The amount of the bid security shall not be forfeited to the Owner in the event the Owner fails to comply with Section 6.2.

...

§ 4.2.2 The ~~Bidder pledges to enter into a Contract with the Owner on the terms stated in the Bid and shall, if required, furnish bonds covering the faithful performance of the Contract and payment of all obligations arising thereunder. Should the Bidder refuse to enter into such Contract or fail to furnish such bonds if required, the amount of the bid~~

Additions and Deletions Report for AIA Document A701™ – 2018. Copyright © 1970, 1974, 1978, 1987, 1997 and 2018 by The American Institute of Architects. All rights reserved. The "American Institute of Architects," "AIA," the AIA Logo, and "AIA Contract Documents" are registered trademarks and may not be used without permission. This document was produced by AIA software at 12:16:24 ET on 11/11/2020 under Order No.6115176972 which expires on 09/19/2021, is not for resale, is licensed for one-time use only, and may only be used in accordance with the AIA Contract Documents® Terms of Service. To report copyright violations, e-mail copyright@aia.org.
User Notes:

~~security shall be forfeited to the Owner as liquidated damages, not as a penalty. In the event the Owner fails to comply with Section 6.2, the amount of the bid security shall not be forfeited to the Owner.~~surety bond that is required as bid security, shall be written on AIA Document A310™, Bid Bond, unless otherwise provided in the Bidding Documents. The attorney-in-fact who executes the bond on behalf of the surety shall affix to the bond a certified and current copy of an acceptable power of attorney. The Bidder shall provide surety bonds from a company or companies lawfully authorized to issue surety bonds in the jurisdiction where the Project is located.

§ 4.2.3 ~~If a surety bond is required as bid security, it shall be written on AIA Document A310™, Bid Bond, unless otherwise provided in the Bidding Documents. The attorney-in-fact who executes the bond on behalf of the surety shall affix to the bond a certified and current copy of an acceptable power of attorney. The Bidder shall provide surety bonds from a company or companies lawfully authorized to issue surety bonds in the jurisdiction where the Project is located.~~The Owner will have the right to retain the bid security of Bidders to whom an award is being considered until (a) the Contract has been executed and bonds, if required, have been furnished; (b) the specified time has elapsed so that Bids may be withdrawn; or (c) all Bids have been rejected.

~~**§ 4.2.4** The Owner will have the right to retain the bid security of Bidders to whom an award is being considered until (a) the Contract has been executed and bonds, if required, have been furnished; (b) the specified time has elapsed so that Bids may be withdrawn; or (c) all Bids have been rejected. However, if no Contract has been awarded or a Bidder has not been notified of the acceptance of its Bid, a Bidder may, beginning days after the opening of Bids, withdraw its Bid and request the return of its bid security.~~

§ 4.3.1 ~~A Bidder shall submit its Bid as indicated below:~~All copies of the Bid, the bid security, if any, and any other documents required to be submitted with the Bid shall be enclosed in a sealed opaque envelope. The envelope shall be addressed to the party receiving the Bids and shall be identified with the Project name, the Bidder's name and address and, if applicable, the designated portion of the Work for which the Bid is submitted. If the Bid is sent by mail, the sealed envelope shall be enclosed in a separate mailing envelope with the notation "SEALED BID ENCLOSED" on the face thereof.

PAGE 5

§ 4.3.2 ~~Paper copies of the Bid, the bid security, and any other documents required to be submitted with the Bid shall be enclosed in a sealed opaque envelope. The envelope shall be addressed to the party receiving the Bids and shall be identified with the Project name, the Bidder's name and address, and, if applicable, the designated portion of the Work for which the Bid is submitted. If the Bid is sent by mail, the sealed envelope shall be enclosed in a separate mailing envelope with the notation "SEALED BID ENCLOSED" on the face thereof.~~Bids shall be submitted by the date and time and at the place indicated in the invitation to bid. Bids submitted after the date and time for receipt of Bids, or at an incorrect place, will not be accepted and will be returned unopened.

§ 4.3.3 ~~Bids shall be submitted by the date and time and at the place indicated in the invitation to bid. Bids submitted after the date and time for receipt of Bids, or at an incorrect place, will not be accepted.~~The Bidder shall assume full responsibility for timely delivery at the location designated for receipt of Bids.

§ 4.3.4 ~~The Bidder shall assume full responsibility for timely delivery at the location designated for receipt of Bids.~~A Bid submitted by any method other than as provided in this Section 4.3 will not be accepted.

~~**§ 4.3.5** A Bid submitted by any method other than as provided in this Section 4.3 will not be accepted.~~

§ 4.4.1 ~~Prior to the date and time designated for receipt of Bids, a Bidder may submit a new Bid to replace a Bid previously submitted, or withdraw its Bid entirely, by notice to the party designated to receive the Bids. Such notice shall be received and duly recorded by the receiving party on or before the date and time set for receipt of Bids. The receiving party shall verify that replaced or withdrawn Bids are removed from the other submitted Bids and not considered. Notice of submission of a replacement Bid or withdrawal of a Bid shall be worded so as not to reveal the amount of the original~~ A Bid may not be modified, withdrawn or canceled by the Bidder during the stipulated time period following the time and date designated for the receipt of Bids, and each Bidder so agrees in submitting a Bid.

Additions and Deletions Report for AIA Document A701™ – 2018. Copyright © 1970, 1974, 1978, 1987, 1997 and 2018 by The American Institute of Architects. All rights reserved. The "American Institute of Architects," "AIA," the AIA Logo, and "AIA Contract Documents" are registered trademarks and may not be used without permission. This document was produced by AIA software at 12:16:24 ET on 11/11/2020 under Order No.6115176972 which expires on 09/19/2021, is not for resale, is licensed for one-time use only, and may only be used in accordance with the AIA Contract Documents® Terms of Service. To report copyright violations, e-mail copyright@aia.org.
User Notes:

§ 4.4.2 ~~Withdrawn Bids may be resubmitted up~~ Prior to the date and time designated for ~~the receipt of Bids in the same format as that established in Section 4.3, provided they fully conform with these Instructions to Bidders. Bid security shall be in an amount sufficient for the Bid as resubmitted.~~receipt of Bids, a Bidder may submit a new Bid to replace a Bid previously submitted, or withdraw its Bid entirely, by notice to the party designated to receive the Bids. Such notice shall be received and duly recorded by the receiving party on or before the date and time set for receipt of Bids. The receiving party shall verify that replaced or withdrawn Bids are removed from the other submitted Bids and not considered. Notice of submission of a replacement Bid or withdrawal of a Bid shall be worded so as not to reveal the amount of the original Bid.

§ 4.4.3 ~~After~~ Withdrawn Bids may be resubmitted up to the date and time designated for ~~receipt of Bids, a Bidder who discovers that it made a clerical error in its Bid shall notify the Architect of such error within two days, or pursuant to a timeframe specified by the law of the jurisdiction where the Project is located, requesting withdrawal of its Bid. Upon providing evidence of such error to the reasonable satisfaction of the Architect, the Bid shall be withdrawn and not resubmitted. If a Bid is withdrawn pursuant to this Section 4.4.3, the bid security will be attended to as follows:~~the receipt of Bids in the same format as that established in Section 4.3, provided they fully conform with these Instructions to Bidders. Bid security shall be in an amount sufficient for the Bid as resubmitted.

§ 4.4.4 After the date and time designated for receipt of Bids, a Bidder who discovers that it made a clerical error in its Bid shall notify the Owner of such error within twenty-four hours requesting withdrawal of its Bid. Upon providing evidence of such error to the reasonable satisfaction of the Owner, the Bid shall be withdrawn and not resubmitted. If a Bid is withdrawn pursuant to this Section 4.4.3, the bid security may be retained at the Owner's discretion.

PAGE 6

Bidders to whom award of a Contract is under consideration shall submit to the ~~Architect,~~ Owner, upon request and within the timeframe specified by the ~~Architect,~~ Owner, a properly executed AIA Document A305™, Contractor's Qualification Statement, unless such a Statement has been previously required and submitted for this Bid.

§ 6.2 ~~Owner's Financial Capability~~

~~A Bidder to whom award of a Contract is under consideration may request in writing, fourteen days prior to the expiration of the time for withdrawal of Bids, that the Owner furnish to the Bidder reasonable evidence that financial arrangements have been made to fulfill the Owner's obligations under the Contract. The Owner shall then furnish such reasonable evidence to the Bidder no later than seven days prior to the expiration of the time for withdrawal of Bids. Unless such reasonable evidence is furnished within the allotted time, the Bidder will not be required to execute the Agreement between the Owner and Contractor.~~Submittals

~~§ 6.3 Submittals~~

~~§ 6.3.1~~ ~~After notification of selection for the award of the Contract, the Bidder shall, as soon as practicable or as stipulated in the Bidding Documents, submit in writing to the Owner through the Architect:~~

- ~~**.1** a designation of the Work to be performed with the Bidder's own forces;~~
- ~~**.2** names of the principal products and systems proposed for the Work and the manufacturers and suppliers of each; and~~
- ~~**.3** names of persons or entities (including those who are to furnish materials or equipment fabricated to a special design) proposed for the principal portions of the Work.~~

~~§ 6.3.2~~ ~~The Bidder will be required to establish to the satisfaction of the Architect and Owner the reliability and responsibility of the persons or entities proposed to furnish and perform the Work described in the Bidding Documents.~~

~~§ 6.3.3~~ ~~Prior to the execution of the Contract, the Architect will notify the Bidder if either the Owner or Architect, after due investigation, has reasonable objection to a person or entity proposed by the Bidder. If the Owner or Architect has reasonable objection to a proposed person or entity, the Bidder may, at the Bidder's option, withdraw the Bid or submit an acceptable substitute person or entity. The Bidder may also submit any required adjustment in the Base Bid or Alternate Bid to account for the difference in cost occasioned by such substitution. The Owner may accept the adjusted bid price or disqualify the Bidder. In the event of either withdrawal or disqualification, bid security will not be forfeited.~~

Additions and Deletions Report for AIA Document A701™ – 2018. Copyright © 1970, 1974, 1978, 1987, 1997 and 2018 by The American Institute of Architects. All rights reserved. The "American Institute of Architects," "AIA," the AIA Logo, and "AIA Contract Documents" are registered trademarks and may not be used without permission. This document was produced by AIA software at 12:16:24 ET on 11/11/2020 under Order No.6115176972 which expires on 09/19/2021, is not for resale, is licensed for one-time use only, and may only be used in accordance with the AIA Contract Documents® Terms of Service. To report copyright violations, e-mail copyright@aia.org.
User Notes:

~~§ 6.3.4 Persons and entities proposed by the Bidder and to whom the Owner and Architect have made no reasonable objection must be used on the Work for which they were proposed and shall not be changed except with the written consent of the Owner and Architect.~~

§ 6.2.1 After notification of selection for the award of the Contract, the Bidder shall, as soon as practicable or as stipulated in the Bidding Documents, submit in writing to the Owner:

.1 a designation of the Work to be performed with the Bidder's own forces;

.2 names of the principal products and systems proposed for the Work and the manufacturers and suppliers of each; and

.3 names of persons or entities (including those who are to furnish materials or equipment fabricated to a special design) proposed for the principal portions of the Work.

§ 6.2.2 The Bidder will be required to establish to the satisfaction of the Owner the reliability and responsibility of the persons or entities proposed to furnish and perform the Work described in the Bidding Documents.

§ 6.2.3 Prior to the execution of the Contract, the Owner will notify the Bidder after due investigation, has reasonable objection to a person or entity proposed by the Bidder. If the Owner has reasonable objection to a proposed person or entity, the Bidder may, at the Bidder's option, withdraw the Bid or submit an acceptable substitute person or entity. The Bidder may also submit any required adjustment in the Base Bid or Alternate Bid to account for the difference in cost occasioned by such substitution. The Owner may accept the adjusted bid price or disqualify the Bidder. In the event of either withdrawal or disqualification, bid security will not be forfeited.

§ 6.2.4 Persons and entities proposed by the Bidder and to whom the Owner have made no reasonable objection must be used on the Work for which they were proposed and shall not be changed except with the written consent of the Owner.

...

§ 7.2.1 The Bidder shall deliver the required bonds to the Owner not later than ~~three~~ ten days following the date of ~~execution of the Contract.~~ the Official Notice to Award. If the Work is to commence sooner in response to a letter of intent, the Bidder shall, prior to commencement of the Work, submit evidence satisfactory to the Owner that such bonds will be furnished and delivered in accordance with this Section 7.2.1.

§ 7.2.2 Unless otherwise provided, the bonds shall be written on ~~AIA Document A312,~~ Comar Document 21.07.02.10, Performance Bond and Payment Bond.

PAGE 7

~~ARTICLE 8 ENUMERATION OF THE PROPOSED CONTRACT DOCUMENTS~~

ARTICLE 8 FORM OF AGREEMENT BETWEEN OWNER AND CONTRACTOR

Unless otherwise required in the Bidding Documents, the Agreement for the work will be written on AIA Document A101, Standard Form of Agreement Between Owner and Contractor Where the Basis of Payment is a Stipulated Sum and AIA Document A201, General Conditions of the Contract for Construction as modified by Frederick County Public Schools.

~~§ 8.1 Copies of the proposed Contract Documents have been made available to the Bidder and consist of the following documents:~~

~~.1 AIA Document A101™–2017, Standard Form of Agreement Between Owner and Contractor, unless otherwise stated below.~~

~~*(Insert the complete AIA Document number, including year, and Document title.)*~~

~~.2 AIA Document A101™–2017, Exhibit A, Insurance and Bonds, unless otherwise stated below.~~

~~*(Insert the complete AIA Document number, including year, and Document title.)*~~

Additions and Deletions Report for AIA Document A701™ – 2018. Copyright © 1970, 1974, 1978, 1987, 1997 and 2018 by The American Institute of Architects. All rights reserved. The "American Institute of Architects," "AIA," the AIA Logo, and "AIA Contract Documents" are registered trademarks and may not be used without permission. This document was produced by AIA software at 12:16:24 ET on 11/11/2020 under Order No.6115176972 which expires on 09/19/2021, is not for resale, is licensed for one-time use only, and may only be used in accordance with the AIA Contract Documents® Terms of Service. To report copyright violations, e-mail copyright@aia.org.

User Notes: (1449359471)

.3 AIA Document A201™–2017, General Conditions of the Contract for Construction, unless otherwise stated below.
(Insert the complete AIA Document number, including year, and Document title.)

.4 AIA Document E203™–2013, Building Information Modeling and Digital Data Exhibit, dated as indicated below:
(Insert the date of the E203-2013.)

.5 Drawings

Number	Title	Date

.6 Specifications

Section	Title	Date	Pages

.7 Addenda:

Number	Date	Pages

.8 Other Exhibits:
(Check all boxes that apply and include appropriate information identifying the exhibit where required.)

[ ] AIA Document E204™–2017, Sustainable Projects Exhibit, dated as indicated below:
(Insert the date of the E204-2017.)

[ ] The Sustainability Plan:

Title	Date	Pages

[ ] Supplementary and other Conditions of the Contract:

Document	Title	Date	Pages

.9 Other documents listed below:
(List here any additional documents that are intended to form part of the Proposed Contract Documents.)

Additions and Deletions Report for AIA Document A701™ – 2018. Copyright © 1970, 1974, 1978, 1987, 1997 and 2018 by The American Institute of Architects. All rights reserved. The "American Institute of Architects," "AIA," the AIA Logo, and "AIA Contract Documents" are registered trademarks and may not be used without permission. This document was produced by AIA software at 12:16:24 ET on 11/11/2020 under Order No.6115176972 which expires on 09/19/2021, is not for resale, is licensed for one-time use only, and may only be used in accordance with the AIA Contract Documents® Terms of Service. To report copyright violations, e-mail copyright@aia.org.
User Notes:

Certification of Document's Authenticity

AIA® Document D401™ – 2003

I, , hereby certify, to the best of my knowledge, information and belief, that I created the attached final document simultaneously with its associated Additions and Deletions Report and this certification at 12:16:24 ET on 11/11/2020 under Order No. 6115176972 from AIA Contract Documents software and that in preparing the attached final document I made no changes to the original text of AIA® Document A701™ – 2018, Instructions to Bidders, as published by the AIA in its software, other than those additions and deletions shown in the associated Additions and Deletions Report.

_____

(Signed)

_____

(Title)

_____

(Dated)

AIA Document D401™ – 2003. Copyright © 1992 and 2003 by The American Institute of Architects. All rights reserved. The "American Institute of Architects," "AIA," the AIA Logo, and "AIA Contract Documents" are registered trademarks and may not be used without permission. This document was produced by AIA software at 12:16:24 ET on 11/11/2020 under Order No.6115176972 which expires on 09/19/2021, is not for resale, is licensed for one-time use only, and may only be used in accordance with the AIA Contract Documents® Terms of Service. To report copyright violations, e-mail copyright@aia.org.
User Notes: (1449359471)

BID 21C5, LINCOLN A FACILITY ROOF REPLACEMENT PROJECT
FREDERICK COUNTY PUBLIC SCHOOLS (FCPS)
SUPPLEMENTAL INSTRUCTIONS TO AIA DOCUMENT A701

1. BIDDER REGISTRATION

All Frederick County Public School vendors and or contractors interested in bidding on FCPS projects must register with eMaryland Marketplace Advantage www.procurement.maryland.gov. FCPS will no longer accept bidder's applications.

2. PRE-BID MEETING

a. A Pre-Bid Meeting will be held at the date and time indicated on the cover page of this solicitation package.

b. Attendance at the Pre-Bid Meeting is not mandatory; however, all vendors are strongly encouraged to attend.

c. The agenda for this Pre-Bid Meeting will include the following: introduction of staff; description of scope of work; timeline/scheduling; budget priorities/concerns; and procurement responsibilities.

d. Questions shall be submitted, via email, to the person(s) indicated on the cover page of this solicitation package. Due to possible changes and/or additions to the specifications, bids should not be submitted prior to the Pre-Bid meeting. Questions received after said date will not be considered. Neither the Owner nor its employees, agents nor representative shall be responsible for oral instructions.

e. If FCPS offices are closed, or operating on a modified schedule, due to inclement weather on the day a Pre-Bid is scheduled, the Pre-Bid is cancelled and will not be rescheduled unless an addendum is issued. Bidders are advised that they are to email questions to the identified Contract Manager by the date and time required within this solicitation. For the fastest, most reliable information, regarding closures and/or delays check the following:

- www.fcps.org
- Social Media: FCPS on Twitter and FCPS on Facebook
- Email/Text Messages: Sign up for FindOutFirst email and emergency-only text messages
- FCPS TV: Comcast Channel 18 (Frederick area)
- Local radio and tv stations

3. RECEIPT OF BIDS

a. Bids received prior to the time of opening will be time stamped and securely kept unopened. No bid received thereafter will be considered. FCPS will not be responsible for the premature opening of bids received that are not properly addressed or identified. Any bid may be withdrawn before the scheduled time for opening bids.

b. All inner and outer envelopes and packaging, used by Fed Ex, UPS and etc., are to be labeled with the following:

- Bidder Name
- Bid Number and Name
- Due Date and Time

c. Bids received after the designated date and/or time will not be accepted, regardless of when they were mailed or given to a delivery carrier.

d. Bids not received by the date, time, and location designated on the solicitation cover sheet, due to improper labeling, may be considered non-responsive.

e. In the event of inclement weather on the date when bids are scheduled to be opened and the FCPS offices are closed, or operating under a modified schedule, bids will be opened on the next business day at the same time as previously scheduled. Bids will be accepted until the scheduled time of opening on the next business day. (Often when schools are closed due to inclement weather, administrative offices remain open. When in doubt, call the Purchasing Department.)

4. ADDENDA

a. All changes to the bid solicitation will be made through appropriate addenda issued from the Purchasing Department.

b. Addenda will be available on the FCPS Purchasing Department webpage. All vendors who are known by the Purchasing Department to have downloaded the bid documents will receive an email notification.

c. Addenda will be issued a minimum of four (4) days prior to the bid opening date, unless the addenda issued extends the due date.

d. Each bidder shall ascertain, prior to submitting a bid that they have received all Addenda issued and the bidder shall acknowledge receipt on the Signature Acknowledgement Form. Failure of any bidder to acknowledge the receipt of addenda will not relieve that bidder from any obligations under this solicitation as amended by addenda. All addenda so issued will become a part of the award and contract documents.

5. PREPARATION OF BID

a. The attention of all contractors, subcontractors and material supply bidders is directed to the Invitation to Bid, Proposal Form(s), AIA documents A701, A101 and A201, and Supplemental Instructions to Bidders to AIA A701 for information pertinent to the bidding process.

b. Should any bidder be in doubt as to the meaning of the specifications, or should they find any discrepancy or omission, they shall notify the Contract Manager listed on the solicitation cover sheet. If required, bidders will be notified of clarifications and/or additional information by means of addenda.

c. Bidder must submit one (1) original proposal, with original signatures, unless otherwise specified. Bids must be prepared on the proposal form(s) provided.

d. Each bid will be sealed, show the full business address and contact information of the bidder and be signed by the person(s) legally authorized to sign contracts. All correspondence concerning the bid and contract, including notice of award, copy of contract, and purchase order, will be emailed, or mailed, to the address shown on the bid in the absence of written instructions from the bidder to the contrary.

e. The following items must be included in submission (if applicable):

i. Proposal pages completely and accurately filled out.
ii. Minority Business Enterprise Attachment “A” Form completed and signed.
iii. Minority Business Enterprise Attachment “B” Form completed and signed.
iv. Statutory Affidavit and Non-Collusion Certification form completed and signed.

v. Certificate of Compliance form completed and signed.
vi. Vendor Conflict of Interest Disclosure form completed and signed.
vii. AIA A310 Bid Bond (for 5% of the total bid amount).

f. Bidders shall be required under Article 56, Section 270(4), Annotated Code of Maryland, to provide proof of Certificate of Registry and must be licensed to do business in the State of Maryland and must provide a tax certification number. Visit the following website to ensure compliance: www.Egov.maryland.gov/BusinessExpress

g. Bids by partnerships must be signed with the partnership name, followed by the signature and designation of the person having authority to sign. When requested, satisfactory evidence of authority of the person signing will be furnished. Anyone signing the bid as an agent shall file satisfactory evidence of their authority to do so, if requested.

h. Bids by corporations must be signed with the name of the corporation, followed by the signature and designation of the person having authority to sign. When requested, satisfactory evidence of authority of the person signing will be furnished. Anyone signing the bid as an agent shall file satisfactory evidence of their authority to do so, if requested.

i. Failure to sign the bid document will result in rejection of the bid as non-responsive.

j. FCPS will not be responsible for any costs incurred by a bidder in preparing and submitting a proposal in response to this solicitation.

k. FCPS will accept all bid responses, however, only companies approved by FCPS' Purchasing Department will be considered for contract award.

6. MBE REQUIREMENTS (if applicable)

a. The contract or supplier who provides materials, supplies, equipment and/or services for this construction project shall attempt to achieve the result that a minimum of 15% percent of the total contract value with a certified Minority Business Enterprises, with a minimum of 0% percent from certified African American-owned businesses, a minimum of 0% percent from Asian American-owned businesses, and the balance from any certified Minority Business Enterprises. All contractors, including certified MBE firms, when submitting bids or proposals as prime contractors, are required to attempt to achieve the MBE goal and subgoals from certified MBEs.

b. Effective May 13, 2013, all contracts containing certified MBE participation goals shall contain a liquidated damages provision that applies if the contractor fails to comply in good faith with the provisions of State MBE laws or the pertinent terms of the procurement contract. (Code of Maryland Regulations (COMAR) 21.11.03.10(E)).

c. Liquidated Damages Provision
This contract requires the contractor to make good faith efforts to comply with the Minority Business Enterprise (MBE) Program and contract provisions. The State and the Contractor acknowledge and agree that the State will incur damages, including but not limited to loss of goodwill, detrimental impact on economic development, and diversion of internal staff resources, if the Contractor does not make good faith efforts to comply with the requirements of the MBE Program and MBE contract provisions. The parties further acknowledge and agree that the damages the State might reasonably be anticipated to accrue as a result of such lack of compliance are difficult to ascertain with precision.

Therefore, upon a determination by the State that the Contractor failed to make good faith efforts to comply with one or more of the specified MBE Program requirements or contract provisions, the Contractor agrees to pay liquidated damages to the State at the rates set forth below. The Contractor expressly agrees that the State may withhold payment on any invoices as a set-off against liquidated

damages owed. The Contractor further agrees that for each specified violation, the agreed upon liquidated damages are reasonably proximate to the loss the State is anticipated to incur as a result of such violation.

i. Failure to submit each monthly payment report in full compliance with COMAR 21.11.03.13B (3): $211.40 per day until the monthly report is submitted as required.

ii. Failure to include in its agreements with MBE subcontractors a provision requiring submission of payment reports in full compliance with COMAR 21.11.03.13B (4): $105.70 per MBE subcontractor.

iii. Failure to comply with COMAR 21.11.03.12 in terminating, canceling, or changing the scope of work/value of a contract with an MBE subcontractor and/or amendment of the MBE participation schedule: the difference between the dollar value of the MBE participation commitment on the MBE participation schedule for that specific MBE firm and the dollar value of the work performed by the MBE firm for the contract.

iv. Failure to meet the Contractor's total MBE participation goal and subgoal commitments: the difference between the dollar value of the total MBE participation commitment on the MBE participation schedule and the MBE participation actually achieved.

v. [Do Not Include In Contracts That Are Subject To Section 15-226 Of The State Finance And Procurement Article – Construction Contracts – Prompt Payment Of Subcontractors]. Failure to promptly pay all undisputed amounts to an MBE subcontractor in full compliance with the prompt payment provisions of this contract: not to exceed $100.00 per day until the undisputed amount due to the MBE subcontractor is paid.

Notwithstanding the use of liquidated damages, the State reserves the right to terminate the contract and exercise all other rights and remedies provided in the contract or by law.

7. PREVAILING WAGE RATES (Applicable)

When applicable, the vendor will comply with Section 17-201 through 17-226 of the State Finance and Procurement Article of the Annotated Code of Maryland, as amended, which requires payment of prevailing wages as determined by the Commissioner of Labor on public works projects.

8. BID BOND

a. Each bidder shall submit with their bid a certified check, cashier's check or bid bond acceptable to the FCPS, for at least five percent (5%) of the amount of TOTAL BID. Each bidder agrees that they will, if awarded the contract, at the time of entering into agreement, furnish to FCPS proper payment and performance bonds naming the Board of Education of Frederick County for the full amount of the contract guaranteeing the faithful performance of all conditions thereof, and the payment in full to all parties furnishing labor and materials or other services on its account.

b. Failure to furnish the required documentation within ten (10) calendar days after receipt of the Notice of Award letter may result in the forfeiture of the submitted surety unless FCPS is responsible for the delay.

c. Certified checks, or cashier's checks, submitted as bid surety will be returned to the awarded vendor upon receipt of required documentation.

9. PRODUCT SUBSTITUTIONS

Bidders are referred to paragraphs contained within the General Requirements and the Technical Specifications for information concerning product substitution.

10. TAXES

a. No charge will be allowed for federal excise, state, and/or municipal sales and use taxes, from which the Board of Education of Frederick County is exempt.

b. A contractor is not eligible, per the Maryland Comptroller's Office, to utilize the tax exemption certificate for governmental agencies.

11. BID OPENING

a. Sealed bids will be opened at the location, date, and time indicated on the solicitation cover sheet.

b. All bids received must include original signatures; no photo copies will be accepted. Unless specifically authorized, facsimile or emailed bids will not be considered. No bids will be accepted via telephone.

c. Complete evaluation of the proposals will not take place at the bid opening and no indication of award will be made. A final recommendation(s) shall be prepared for review and approval by the Board of Education of Frederick County.

d. The recommended award will be posted to the FCPS BoardDocs website a minimum of five days prior to the Board of Education meeting in which it will be presented.

e. Final award recommendation, and the bid tabulation, will be posted on the FCPS webpage, www.fcps.org/bidlist, after the Board of Education of Frederick County approval.

12. ERRORS IN BID SUBMISSIONS

a. Bidders, or their authorized representatives, are expected to fully inform themselves as to the conditions and requirements of the specifications before submitting bids. Failure to do so will be at the bidder's own risk.

b. If the bidder has made an error, the bidder may request, in writing, to have their bid withdrawn. The request must be received in the Purchasing Department within one business day after the time established for the bid opening and include written documentation substantiating the error. Approval of a bidder's request is not automatic and may be given only by the Purchasing Manager. Requests for withdrawal are usually denied, unless the bidder proves to the satisfaction of the Purchasing Manager that the mistake was either a scrivener's error or another type of clearly unintentional error so departing from customary and reasonable business practices as to be obvious and to legitimately and substantially impair the vendor's business.

c. Neither law nor regulations make allowance for errors either of omission or commission on the part of the bidders. In case of error in multiplication of unit price when arriving at total price per line item, the unit price shall govern. If there is a discrepancy between the price written in numbers and the price written in words, the words will govern.

13. AWARDS OR REJECTION OF BIDS

a. The basis of award shall be the lowest responsible bidder submitting a responsive bid that conforms to the specifications established in the solicitation with consideration given to the quantities involved, time required for delivery, purpose for which required, competency and responsibility of bidder, the ability of the bidder to perform satisfactory service, and the plan for utilization of minority contractors, if applicable.

b. FCPS reserves the right to determine completeness and/or timeliness of bids, to reject any or all bids in whole or in part, to make partial awards, to waive any informality in any quotation, to increase or decrease quantities if quantities are listed in the bid, to reject any bid that shows any omissions, alterations of form, additions not called for, conditions, or alternate proposals, and to make any such award as is deemed to be in its best interest.

c. Bidders may be required, before the awarding of a contract, to show to the complete satisfaction of FCPS, that they have the necessary facilities, ability and financial resources to execute the contract in a satisfactory manner, and within the time specified. Bidders may be required to demonstrate they have the necessary experience, history and references to assure FCPS of their qualifications.

d. The Board of Education of Frederick County reserves the right to award the bid within 90 days from the date of the bid opening unless a different time period is stated in the bid document.

e. In the event of a tie, where all other factors, such as past performance, are considered comparable, the award shall be made to the Frederick County based bidder; the closest Maryland out-of-county based bidder; and the closest out-of-state based bidder, in that order of preference.

f. FCPS does not have local, state or federal preference requirements except when mandated by a targeted funding source.

g. If, after competitive sealed bids have been opened, the Purchasing Manager determines that only one responsible bidder has submitted a responsive bid, the procurement contract may be negotiated with that one bidder as sole source procurement.

h. A recommendation for the award of a contract will be presented to the Board of Education of Frederick County for approval. Upon approval of the award of contract, the bidder(s) shall be notified of their award(s). If applicable, an FCPS contract document shall also be issued.

i. The Board of Education of Frederick County reserves the right to reject the bid of a bidder who has, in the opinion of FCPS, failed to properly perform under previous contracts, or, who investigation shows, is not in a position to perform the contract.

j. The Board of Education of Frederick County retains the right to reject any and all bids, if it is deemed in the best interest of FCPS to do so.

k. If, during the life of the contract, a product or service does not meet the solicitation terms and conditions, FCPS retains the right to cancel the awarded item(s) and award to a new bidder, as long as that bidder mutually agrees to the award.

14. CONTRACT FORMATION

a. Notification of the contract award will be made by letter after approval by the Board of Education of Frederick County.

b. The form of contract between the owner and the awarded bidder shall be AIA Document A101,

Standard Form of Agreement Between Owner and Contractor (2007 edition) including the AIA A201 General Conditions of the Contract for Construction (2007 edition), together with any Frederick County Public Schools' agreed upon schedules, addenda, shop drawings, and documents associated with the bid solicitation/submission/award.

c. No amendment, modification or change to the contract shall be effective unless such change is in writing and mutually agreed upon by authorized representatives of FCPS and the awarded vendor(s). Changes may not significantly alter the original scope of the agreement.

15. PERFORMANCE AND PAYMENT BONDS

a. If applicable, the awarded vendor(s) may be required to submit either one or both of the following two bonds to the Purchasing Department ten (10) calendar days after receipt of the Notice of Award and in accordance with the terms stated below:

   i. **Performance Bond** in the amount of 100% of the contract value covering faithful performance of the contract; and

   ii. **Payment Bond** in the amount of 100% of the contract value as security for the payment of all persons performing labor and furnishing materials in connection therewith.

b. The cost of the performance bond and payment bonds will be borne by the bidder(s) in all instances.

c. Certified checks in the amounts stated above will be accepted in lieu of the performance bond and payment bond only upon prior approval of the Purchasing Manager. If checks are approved for acceptance in lieu of either bond, they should be in the same amount as these bonds; be separate checks; and should clearly designate the purpose - i.e., performance or payment.

d. Certified checks, if submitted, will be deposited in an FCPS bank account(s). Upon successful completion of the contract, check(s) will be drawn upon the FCPS bank account(s) for the full amounts of both certified checks.

e. Bonds must be approved by surety companies which are named in the most current Circular 570 "Surety Companies Acceptable on Federal Bonds" as issued by the U.S. Treasury, Bureau of Government Finance Operations, Division of Banking and Cash Management, Washington, D.C. 20111. Maryland Code 21-102 – A certificate of authority, or certified copy of a certificate of authority, issued by the Commissioner to a surety insurer shall be accepted as evidence of qualification to become sole surety on a bond, undertaking, recognizance, or other obligation required or allowed by law, or in the charter, ordinances, rules, or regulations of a municipal corporation, board, organization, court, judge, or public officer, without further proof or qualification regarding solvency, credit, or financial sufficiency to act as a surety or bidders must use bonding companies rated by A.M. Best Company of at least A-/VIII.

f. If a bonding company is used that is not on the most current Circular 570, the vendor will be contacted to obtain a bond from an approved surety company and re-submit it to the Purchasing Department within ten (10) calendar days after notification.

g. Upon receipt and approval of the performance bond and payment bond, or the certified check(s), an official purchase order will be issued.

h. The awarded vendor's security will be retained until they have signed the Owner-Contractor Agreement and Addendum and furnished the required Payment Bond and Performance Bond, guaranteeing payment of damages in the event of failure to perform as agreed, including the prevailing wage rate clause. The Owner reserves the right to retain the security of all bidding contractors until the

selected bidder enters into contract, or until ninety (90) calendar days after the bid opening, whichever is shorter. If any bidder refuses to enter into a contract, the Owner may retain his bid security as liquidated damages, but not as a penalty.

i. If bonds are required, and the awarded vendor fails to perform according to the terms of the contract, the bonding company will be notified in writing with a copy sent to the vendor.

16. INSURANCE REQUIREMENTS

Reference AIA Document A101-2007 Article 10, Insurance and Bonds for insurance requirement types and limits.

17. DATE OF COMMENCEMENT AND SUBSTANTIAL COMPLETION

a. It is anticipated that construction will commence on or around June 24, 2021.

b. Substantial completion shall be achieved by August 10, 2021.

18. PROTESTS

a. The Purchasing Manager or designee (when the Purchasing Manager administers the bid being protested) shall attempt to resolve, informally, all protests of bid award recommendations. Bidders are encouraged to present their concerns promptly to the Contract Manager for consideration.

i. The bidder must submit their concern, in writing, addressed to the Purchasing Manager. It should include the following:

- Name, address, contact information of the protestor;
- Statement of reasons for the protest;
- Supporting documentation to substantiate the claim;
- The remedy sought.

ii. The protest must be received by the Purchasing Manager at least two calendar days prior to the date of the Board of Education meeting at which the recommendation will be presented. It is the vendor's responsibility to ascertain the date and time of award.

iii. A bidder who does not file a timely protest before the contract is awarded by the Board of Education of Frederick County is deemed to have waived any objection.

1. The Purchasing Manager shall inform the Chief Financial Officer and/or general counsel upon receipt of the protest, and shall confer with them prior to the issuance of a decision regarding disputes of contracts or awards valued at $25,000 or above.

2. The Purchasing Manager shall issue a decision in writing.

3. Should the protestor disapprove of the Purchasing Manager's decision, they have the right to address the Board of Education of Frederick County during the public comment section of the same Board meeting where the award recommendation is scheduled for award.

4. The Board of Education of Frederick County's decision is deemed the final action at the local level.

5. A bidder may appeal a decision of the Board directly to the Maryland State Board of Education in accordance with Board Policy 105.11 and Maryland law.

19. MULTI-YEAR CONTRACT

a. Contracts that require funding appropriation for more than one fiscal year automatically terminate if money sufficient for the continued performance is not appropriated for any fiscal year. The date of termination is the last day of the fiscal year for which money was last appropriated, or the date provided in the termination clause of the procurement contract, whichever is earlier.

b. If the multi-year contract is terminated due to lack of funding, FCPS shall reimburse the vendor for the reasonable value of any nonrecurring costs that were incurred as a result of the multi-year contract, but not amortized in the price of the supplies or services delivered under the multi-year contract. The reasonable value will be negotiated, and mutually agreed upon, by FCPS and the vendor.

c. The cost of termination may be paid from any appropriation available for that purpose.

20. TERMINATION FOR DEFAULT

a. When an awarded vendor has not performed or has unsatisfactorily performed the contract, payment shall be withheld at the discretion of FCPS. FCPS may, by written notice of default to the vendor, terminate the whole or any part of the contract in any of the following circumstances:

   i. If the vendor fails to perform the services or provide the products within the time and manner specific herein or any extension thereof, or:

   ii. If the vendor fails to perform any of the provisions of this contact, or fails to make progress as to endanger performance of this contract, in accordance with its terms and in either of these two circumstances does not cure such failure within a period of ten calendar days (or longer as authorized by the Purchasing Manager) after receipt of written notice from the Purchasing Manager of such failure, or:

   iii. If the vendor willfully attempts to perform the services other than specified as to coverage, limits, protections, and quality or otherwise, without specified authorization in the form of contract amendment, or:

   iv. If a determination is made by FCPS that the obtaining of the contract was influenced by an employee FCPS having received a gratuity, or a promise therefore, in any way or form.

b. In the event FCPS terminates the contract in whole or in part, FCPS may procure such products and services, in a manner the Purchasing Manager deems appropriate, and the vendor shall be liable to FCPS for any additional cost(s) incurred.

c. If, after notice of termination of this contract under provisions of this clause, it is determined for any reason that the vendor was not in default under the provisions of this clause, or that the default was excusable under the provisions of this clause, the rights and obligations of the parties shall be the same as if the notice of termination had been issued pursuant to a termination for convenience.

21. TERMINATION FOR CONVENIENCE

The contract may be terminated by FCPS in accordance with this clause in whole, or in part, whenever FCPS determines that such a termination is in the best interest of FCPS. Written notice shall be given a minimum of 30 days in advance. FCPS will pay for all services, in accordance with contract pricing, up to the date of the termination. However, the awarded vendor(s) shall not be reimbursed for any anticipatory profits that have not been earned up to the date of termination. Under this contract, the awarded vendor does not have a right to unilateral termination for convenience.

22. HOLD HARMLESS

It is understood that the awarded vendor(s) shall defend and hold harmless the Board of Education of Frederick County, and its representatives, from all suits, actions, or claims of any kind brought about as a result of any injuries or damages sustained by person(s) or property during the performance of this contract.

23. CONTRACT DISPUTES

a. Any dispute arising under this contract shall be decided by the Contract Administrator, the Contract Manager and the Purchasing Manager, who will communicate their decision to writing and furnish a copy to the vendor. This decision shall be final and conclusive unless, within 30 days, the vendor furnishes a written appeal addressed to the Board of Education of Frederick County. The local Board of Education has the right to hear appeals as provided by Maryland law.

b. The Board of Education of Frederick County, or its duly authorized representative, will review the appeal for the determination of such appeal and their finding shall be final and conclusive. In connection with any appeal preceding under this clause, the vendor will be afforded an opportunity to be heard and to offer evidence in support of his appeal. Pending final decision of a dispute, the vendor shall proceed diligently with the performance of the contract and in strict accordance with the FCPS staff's decision. Exceptions are decisions determined by a court of competent jurisdiction to have been fraudulent, capricious, arbitrary, or so grossly erroneous as to imply bad faith, or not supported by evidence.

c. This clause does not preclude consideration of laws questioned in connection with the decision provided for above.

24. LIQUIDATED DAMAGES

a. AIA Document A101, Article 3.3.2 clarification:

In the event that the Contractor does not achieve Substantial Completion as stipulated, including approved extensions, the Contractor and the Contractor's surety shall be liable for and shall pay liquidated damages to the Owner.

The liquidated damages sum of $1.00 per student based on the expected enrollment of **500** students for total liquidated damages in the amount of **$500.00** per day.

25. PROVISION OF PORTABLE SANITATION AND REMOVAL OF DEBRIS

a. Vendors are responsible for removal of trash and debris and will confine their apparatus, materials, supplies, and equipment in such orderly fashion at the work site so that it will not unduly interfere with the progress of the work of any other vendor.

b. It will be the vendor's responsibility to provide portable sanitation facilities on the work site and secure Health Department or local subdivision approval, when required.

c. They will not interfere with FCPS personnel or students in the performance of this contract. FCPS reserves first right of salvage on all materials removed from FCPS facilities and no salvage values should be assumed in bidding on the project unless so stated in the specifications. Vendors will pay all disposal fees and can recuperate them only by including them in their bid pricing.

d. At the completion of the work, and before final payment is made, vendors will remove all rubbish and

debris and will leave the work site clean, including site restoration. Vendors will remove all tools, scaffolding and surplus materials from and about the building. In case of dispute, FCPS may remove the rubbish and/or repair property and charge such costs to the vendor.

26. PROTECTION OF WORK AND PROPERTY

a. The vendor will be solely responsible for initiating, maintaining and supervising all safety precautions and programs in the performance of this contract and will be responsible for observing the safety regulations of MOSHA, OSHA, and local life safety agencies.

b. The vendor will erect and maintain, as required by conditions and progress of the work, all necessary safeguards for safety and protection, including fences, railing, barricades, lighting, posting of danger signs and other warnings against hazards.

c. The vendor will comply with applicable laws, ordinances, regulations and orders of governing authorities having jurisdiction for the safety of persons and property to protect them from damage, injury or loss. Any damage, loss or injury resulting from the failure of the vendor to safe guard their work and FCPS property will be borne by the vendor.

d. In the case of inclement weather, or an emergency that threatens the loss or damage of property or life safety, the vendor will be allowed to act in a diligent manner without instructions from FCPS. The vendor will notify the Contract Administrator of their actions as soon as possible. Any claim for compensation by the vendor due to such extra work will be submitted promptly to FCPS for approval

27. LAWS AND REGULATIONS

a. The vendor will comply with all Federal, State, and local laws, ordinances and regulations pertaining to work under their charge. If the vendor performs any work which it knows or should know to be contrary to such laws, ordinance, and regulations and without such notices to FCPS they shall bear all costs arising therefrom.

b. All vendors and subcontractors must abide by the Board of Education of Frederick County policies and FCPS regulations while working on school property.

c. The vendor certifies that their firm adheres to or follows non-discriminatory practices with respect to the employment and promotion of personnel without regard to color, creed, race, sex, or national origin.

28. AMERICAN STEEL ACT

The vendor will comply with the provisions of Sections 17-301 through 17-306 of the State Finance and Procurement Article of the Annotated Code of Maryland, as amended entitled "Steel Procurement for Public Works." The vendor's affidavit of compliance with these provisions may be required before payment can be made.

29. EMPLOYMENT OF CHILD SEX OFFENDERS AND PERSONS WITH UNCONTROLLED ACCESS TO STUDENTS

a. Be advised that individuals who are registered sex offenders are not eligible to work on any FCPS' project. The awarded supplier(s) must initially check the Maryland Department of Public Safety & Correctional Services' Maryland Sex Offender Registry and search for the name of any employee to be assigned to work on this project. This applies to subcontractors and material/equipment suppliers as well. For projects lasting more than a few months, the supplier will periodically re-check the names of workers against the registry to ensure ongoing compliance. In the event that a registered sex offender

is discovered to be working on a FCPS project, whether through employment by the supplier, subcontractor or equipment or material supplier, FCPS will notify the site superintendent to immediately remove the individual from the premises and permanently terminate his work assignment. FCPS may terminate this contract at no additional costs, as a result if the supplier is unable to demonstrate they have exercised care and diligence in the past in checking the Maryland registry.

b. Contracted service providers who have regular, direct and unsupervised access to children cannot begin service without undergoing the same process as new employees per FCPS Regulation 300-33. If required, an awarded supplier(s) is responsible for payment of the full cost of the criminal background check. Additional information regarding this requirement will be found in Section II – FCPS Specific Terms and Conditions.

c. The awarded supplier(s), or subcontractor(s), may not knowingly assign an employee to work on FCPS school premises with direct, unsupervised, and uncontrolled access to children, if the employee has been convicted of a crime identified as a crime of violence.

d. The awarded supplier(s) will not assign employees who has been convicted of an offense under § 3-307 or § 3-308 of the Criminal Law Article or an offense under the laws of another state that would constitute a violation of § 3-307 or § 3-308 of the Criminal Law Article if committed in the state.

e. An awarded supplier will not assign employee who has been convicted of a crime of violence as defined in § 14-101 of the Criminal Law Article, or an offense under the laws of another state that would be a violation of § 14-101 of the Criminal Law Article if committed in this state.

f. With the passing of Maryland Law MD. Code, Educ. 6-113.2, employers of all contracted staff must obtain background information relating to child sexual abuse or sexual misconduct**.** This means that all contracted staff having direct contact with students must meet all of the FCPS and Maryland State Department of Education (MSDE) requirements before doing business with FCPS. For additional information, visit:
   - Maryland State Department of Education Website;
   - House Bill 486 Child Sexual Abuse and Sexual Misconduct Prevention;
   - MSDE Guidelines For MD. Code, Educ. 6113.2;
   - Employment History Review Form for Child Abuse and Sexual Misconduct

Effective immediately, we will not fingerprint staff provided to FCPS by contractors or staffing agencies. Based on recent procedural review and guidance received from the state of Maryland, it is confirmed that the fingerprint records from the state's Criminal Justice Information System (CJIS) are to be processed and kept by employers only. This means that the contractors providing staff to FCPS are responsible to perform the CJIS fingerprint check since they are the employers of staff being provided to FCPS under various agreements. The fingerprint check required by FCPS and all Maryland school districts is the Adam Walsh Act background transaction (commonly referred to as the Child Care background check).

30. DRUG, ALCOHOL, AND TOBACCO-FREE WORKPLACE

a. All awarded vendors and subcontractors must abide by Board Policy 112 while working on any FCPS property at all times.

b. The Board of Education of Frederick County endorses the provisions of Public Law 100-690, Title V, Subtitle D (Drug-Free Workplace Act of 1988) and Public Law 101-226 (The Drug-Free Schools and Communities Act of 1989) and regulations promulgated there under and establishes a drug-free and alcohol-free workplace and school system.

c. Maryland State Law (COMAR 13A.02.04) provides that each local school system is required to

maintain a tobacco-free school environment.

31. WEAPON POSSESSION ON SCHOOL PROPERTY

a. The criminal code of Maryland makes it illegal to possess a weapon on school property.

b. No person shall carry or possess any rifle, gun, knife, or deadly weapon of any kind on FCPS property.

c. Any awarded vendor(s) whose employees violate this clause may be subject to the termination of the contact for cause.

32. ILLEGAL IMMIGRANT LABOR

The use of illegal immigrant labor to fulfill contracts solicited by FCPS is in violation of the law and is strictly prohibited. Awarded vendor(s) and subcontractors must verify employment eligibility of workers in order to assure that they are not violating federal/state/local laws regarding illegal immigration. A compliance audit may be conducted.

33. STUDENT/STAFF CONFIDENTIALITY

Under no circumstances may any vendor/contractor/provider/consultant release, disclose, sell or otherwise use names, addresses, or any other information related to students, or staff, of FCPS and may only use this information for purposes required under any contract/agreement or memorandum of understanding.

34. PUBLIC INFORMATION ACT NOTICE

a. Bidders should identify those portions of their solicitation, which they deem to be confidential, or to contain proprietary commercial information or trade secrets. Bidders should provide justification why such material, upon request, should not be disclosed by FCPS under the Public Information Act, Title 4, General Provisions Article, Annotated Code of Maryland.

b. Unless portions of a solicitation are identified as confidential, all records are considered public. A person or governmental unit that wishes to inspect a public record, or receive copies of a public record, shall submit a written or electronic request and direct it to the Office of Legal Services per FCPS Regulation 200-42.

35. FORCE MAJEURE

Force Majeure is defined as an occurrence beyond the control of the affected party and not avoidable by reason of diligence. It includes the acts of nature, war, riots, strikes, fire, floods, epidemics, terrorism, or other similar occurrences. If either party is delayed by Force Majeure, said party shall provide written notification to the other within 48 hours. Delays shall cease as soon as practicable and written notification of same provided. The time of contract completion may be extended by contract modification, for a period of time equal to that delay caused under this condition. FCPS may also consider requests for price increase for raw materials that are directly attributable to the cause of delay. FCPS reserves the right to cancel the contract and/or purchase materials, equipment or services from the best available source during the time of Force Majeure, and the vendor shall have no recourse against FCPS. Further, except for payment of sums due, neither party shall be liable to the other or deemed in default under this contract, if and to the extent that such party's performance of this contract is prevented by reason of Force Majeure as defined herein.

36. ETHICS POLICY

a. The Board of Education of Frederick County has an Ethics Policy, which covers conflict of interest, financial disclosure and lobbying. All bidders are expected to comply with any and all Ethics Policies that may apply to them individually or as a business entity.

b. All bidders should carefully review Board Policy 109, Ethics, which prohibits FCPS employees from benefiting from business with the school system.

37. NON-COLLUSION

a. Bidder represents and certifies that prices for these services have been arrived at independently without consultation, communication, or agreement for the purpose of restricting competition or any matter related to such prices with any competitor or other bidder. Prices quoted in this bid have not been knowingly disclosed directly or indirectly to any competitor or other vendor prior to the opening of this bid.

b. Bidder represents and certifies that it has not employed or retained any other company or person (other than a full-time bona fide employee working exclusively for the bidder) with the primary intent to solicit or secure the contract.

38. CONFLICT OF INTEREST

The bidder will advise FCPS in writing as soon as possible, but not later than the date of award of the contract, of any known relationships with a third party, or FCPS employee or representative, which would present a significant advantage to one bidder over another bidder or present a conflict of interest with the rendering of products and services under this agreement.

39. eMARYLAND MARKETPLACE ADVANTAGE REGISTRATION

Contractors are required to register with eMaryland Marketplace Advantage www.procurement.maryland.gov within five days following notice of award. Maryland law requires local and state agencies to post award notices on eMaryland Marketplace Advantage. This cannot be done without the contractor's self-registration in the system. Registration is free. Failure to comply with this requirement may be considered grounds for default. It is recommended that any interested bidder register with eMaryland Marketplace Advantage regardless of the award outcome for this procurement as it is a valuable resource for bid notification for municipalities through Maryland

FREDERICK COUNTY PUBLIC SCHOOLS
PURCHASING DEPT.
191 SOUTH EAST STREET
FREDERICK, MD 21701
PHONE: 301-644-5219
FAX: 301-644-5213

FORM OF PROPOSAL

Project: FCPS: Lincoln 'A' Facility Roof Replacement
Bid Number: 21C5
BFM Project No. 20045

In compliance with your invitation to bids, the undersigned proposes to provide to furnish and deliver all labor, materials, equipment and incidentals in accordance with the accompanying specifications and "Instructions and General Conditions" required to perform work in strict accordance with the plans and specifications as issued:

A. BASE BID: ROOF AREAS (BID WITHOUT PREVAILING WAGES)

1. BASE BID - Roof Replacement of the Designated Roof Area plus Total Unit Sum Price.

($_____) _____
Numeric Written in Words

A1. BASE BID: ROOF AREAS (BID WITH PREVAILING WAGES)

1. BASE BID - Roof Replacement of the Designated Roof Area plus Total Unit Sum Price.

($_____) _____
Numeric Written in Words

B. UNIT PRICE SCHEDULE:

Please complete unit price schedule and return with Bid Proposal. Unit prices are required on the following items to provide for the addition or deletion of work if the Engineer's estimated quantities vary more than ±10 percent from the actual work required. Unit prices shall include all supervision, labor, equipment, materials, mark-up, overhead and profit and bond. These prices are based on performance during the period of the contract. Do not exceed (>10%) the estimated quantity of work without written notice from Frederick County Public Schools.

UNIT PRICE SCHEDULE: In accordance with Section 01010, Article 1.06, provide the following Unit Prices.

Item Bid		Description	Estimated Quantity	Unit Price	Item Price
a.	UP.1	Patch hole in metal deck less than 1 s.f each	20 s.f. @	$_____/s.f.	= $_____
b.	UP.2	Replace deteriorated metal deck in quantities greater than 1 s.f. each	300 s.f. @	$_____/s.f.	= $_____
c.	UP.3	Replace deteriorated wood blocking, with 2x4 pressure-treated lumber.	200 l.f. @	$_____/l.f	= $_____

d. UP.4 Replace deteriorated wood blocking, with 2x6 pressure-treated lumber. 200 l.f. @ $_____/l.f = $_____

e. UP.5 Replace deteriorated wood blocking, with 2x8 pressure-treated lumber. 200 l.f. @ $_____/l.f = $_____

Unit Price Total of UP.1 through UP.5 $_____
(include total sum in Base Bid Lump Sum Price)

Unused quantities of the above contingency materials shall be credited from the contract at the end of the project per the unit price cost.

I/We certify that this bid/proposal is made without previous understanding, agreement, or connection with any person, firm, or corporation submitting a bid/proposal for the same goods/services and is, in all respects fair and without collusion or fraud; that none of this company's officers, directors, partners or its employees have been convicted of bribery, attempted bribery, or conspiracy to bribe under the laws of any state or federal government; and that no member of the Board of Education of Frederick County, Administrative or Supervisory Personnel or other employees of the Frederick County Public Schools, has any interest in the bidding company except as follows:

COMPANY: _____

dba: _____

REGISTERED MARYLAND CONTRACTOR NUMBER: _____

FEDERAL IDENTIFICATION: _____ DATE: _____

The undersigned has familiarized themselves with the conditions affecting the work, the specifications, and is legally authorized to make this proposal on behalf of the Contractor listed above.

NAME (please print): _____

SIGNATURE OF ABOVE: _____

TITLE: _____

ADDRESS: _____

_____

TELEPHONE # _____ FAX # _____

E-MAIL ADDRESS (for correspondence): _____

E-MAIL ADDRESS (for receiving Purchase Orders): _____
(DO NOT COMPLETE THIS AREA IF YOUR COMPANY IS UNABLE TO RECEIVE PURCHASE ORDERS ELECTRONICALLY)

ACKNOWLEDGMENT OF ADDENDA (if applicable)

The above-signed company/firm acknowledges the receipt of the following addenda for the above-referenced solicitation.

Date Received by Proposer/Bidder:

Addendum #1	_____	Addendum #2	_____
Addendum #3	_____	Addendum #4	_____
Addendum #5	_____	Addendum #6	_____
Addendum #7	_____	Addendum #8	_____

AIA® Document A310™ – 2010

Bid Bond

CONTRACTOR:
(Name, legal status and address)

SURETY:
(Name, legal status and principal place of business)

OWNER:
(Name, legal status and address)
The Board of Education of Frederick County
191 South East Street
Frederick, Maryland 21701-5918

BOND AMOUNT: $

PROJECT:
(Name, location or address, and Project number, if any)
Lincoln "A" Facility
Roof Replacement
250 Madison Street
Frederick, Maryland 21701
FCPS Bid 21C5

The Contractor and Surety are bound to the Owner in the amount set forth above, for the payment of which the Contractor and Surety bind themselves, their heirs, executors, administrators, successors and assigns, jointly and severally, as provided herein. The conditions of this Bond are such that if the Owner accepts the bid of the Contractor within the time specified in the bid documents, or within such time period as may be agreed to by the Owner and Contractor, and the Contractor either (1) enters into a contract with the Owner in accordance with the terms of such bid, and gives such bond or bonds as may be specified in the bidding or Contract Documents, with a surety admitted in the jurisdiction of the Project and otherwise acceptable to the Owner, for the faithful performance of such Contract and for the prompt payment of labor and material furnished in the prosecution thereof; or (2) pays to the Owner the difference, not to exceed the amount of this Bond, between the amount specified in said bid and such larger amount for which the Owner may in good faith contract with another party to perform the work covered by said bid, then this obligation shall be null and void, otherwise to remain in full force and effect. The Surety hereby waives any notice of an agreement between the Owner and Contractor to extend the time in which the Owner may accept the bid. Waiver of notice by the Surety shall not apply to any extension exceeding sixty (60) days in the aggregate beyond the time for acceptance of bids specified in the bid documents, and the Owner and Contractor shall obtain the Surety's consent for an extension beyond sixty (60) days.

If this Bond is issued in connection with a subcontractor's bid to a Contractor, the term Contractor in this Bond shall be deemed to be Subcontractor and the term Owner shall be deemed to be Contractor.

When this Bond has been furnished to comply with a statutory or other legal requirement in the location of the Project, any provision in this Bond conflicting with said statutory or legal requirement shall be deemed deleted herefrom and provisions conforming to such statutory or other legal requirement shall be deemed incorporated herein. When so

ADDITIONS AND DELETIONS:
The author of this document has added information needed for its completion. The author may also have revised the text of the original AIA standard form. An *Additions and Deletions Report* that notes added information as well as revisions to the standard form text is available from the author and should be reviewed. A vertical line in the left margin of this document indicates where the author has added necessary information and where the author has added to or deleted from the original AIA text.

This document has important legal consequences. Consultation with an attorney is encouraged with respect to its completion or modification.

Any singular reference to Contractor, Surety, Owner or other party shall be considered plural where applicable.

Init.
/

AIA Document A310™ – 2010. Copyright © 1963, 1970 and 2010 by The American Institute of Architects. All rights reserved. The "American Institute of Architects," "AIA," the AIA Logo, and "AIA Contract Documents" are registered trademarks and may not be used without permission. This document was produced by AIA software at 12:21:54 ET on 11/11/2020 under Order No.6115176972 which expires on 09/19/2021, is not for resale, is licensed for one-time use only, and may only be used in accordance with the AIA Contract Documents® Terms of Service. To report copyright violations, e-mail copyright@aia.org.
User Notes: (1181177712)

furnished, the intent is that this Bond shall be construed as a statutory bond and not as a common law bond.

Signed and sealed this day of ,

	(Contractor as Principal) *(Seal)*
(Witness)	*(Title)*
	(Surety) *(Seal)*
(Witness)	*(Title)*

AIA Document A310™ – 2010. Copyright © 1963, 1970 and 2010 by The American Institute of Architects. All rights reserved. The "American Institute of Architects," "AIA," the AIA Logo, and "AIA Contract Documents" are registered trademarks and may not be used without permission. This document was produced by AIA software at 12:21:54 ET on 11/11/2020 under Order No.6115176972 which expires on 09/19/2021, is not for resale, is licensed for one-time use only, and may only be used in accordance with the AIA Contract Documents® Terms of Service. To report copyright violations, e-mail copyright@aia.org.
User Notes: (1181177712)

Additions and Deletions Report for

AIA® Document A310™ – 2010

This Additions and Deletions Report, as defined on page 1 of the associated document, reproduces below all text the author has added to the standard form AIA document in order to complete it, as well as any text the author may have added to or deleted from the original AIA text. Added text is shown underlined. Deleted text is indicated with a horizontal line through the original AIA text.

Note: This Additions and Deletions Report is provided for information purposes only and is not incorporated into or constitute any part of the associated AIA document. This Additions and Deletions Report and its associated document were generated simultaneously by AIA software at 12:21:54 ET on 11/11/2020.

PAGE 1

The Board of Education of Frederick County
191 South East Street
Frederick, Maryland 21701-5918

...

Lincoln "A" Facility
Roof Replacement
250 Madison Street
Frederick, Maryland 21701
FCPS Bid 21C5

Additions and Deletions Report for AIA Document A310™ – 2010. Copyright © 1963, 1970 and 2010 by The American Institute of Architects. All rights reserved. The "American Institute of Architects," "AIA," the AIA Logo, and "AIA Contract Documents" are registered trademarks and may not be used without permission. This document was produced by AIA software at 12:21:54 ET on 11/11/2020 under Order No.6115176972 which expires on 09/19/2021, is not for resale, is licensed for one-time use only, and may only be used in accordance with the AIA Contract Documents® Terms of Service. To report copyright violations, e-mail copyright@aia.org.
User Notes:

Certification of Document's Authenticity

AIA® Document D401™ – 2003

I, , hereby certify, to the best of my knowledge, information and belief, that I created the attached final document simultaneously with its associated Additions and Deletions Report and this certification at 12:21:54 ET on 11/11/2020 under Order No. 6115176972 from AIA Contract Documents software and that in preparing the attached final document I made no changes to the original text of AIA® Document A310™ – 2010, Bid Bond, as published by the AIA in its software, other than those additions and deletions shown in the associated Additions and Deletions Report.

_____

(Signed)

_____

(Title)

_____

(Dated)

AIA Document D401™ – 2003. Copyright © 1992 and 2003 by The American Institute of Architects. All rights reserved. The "American Institute of Architects," "AIA," the AIA Logo, and "AIA Contract Documents" are registered trademarks and may not be used without permission. This document was produced by AIA software at 12:21:54 ET on 11/11/2020 under Order No.6115176972 which expires on 09/19/2021, is not for resale, is licensed for one-time use only, and may only be used in accordance with the AIA Contract Documents® Terms of Service. To report copyright violations, e-mail copyright@aia.org.
User Notes: (1181177712)

PROJECT: _____
PSC#: _____

Attachment A

CERTIFIED MINORITY BUSINESS ENTERPRISE UTILIZATION AND FAIR SOLICITATION AFFIDAVIT

***NOTE: You must include this document with your bid or offer*. If you do not submit the form with your bid or offer, the procurement officer shall deem your bid non-responsive or your offer not reasonably susceptible of being selected for award.**

* * * * * * * * * * * * * * *

Part I.

I acknowledge the:

- Overall certified MBE subcontract participation goal of __15__ %. and
- The subgoals, if applicable, of:
  - __0__ % for certified African American-owned businesses and
  - __0__ % for certified Asian American-owned businesses.

I have made a good-faith effort to achieve this goal. If awarded the contract, I will continue to attempt to increase MBE participation during the project.

Part II.

Check ONE Box

NOTE: FAILURE TO CHECK ONE OF BOXES 1, 2, or 3 BELOW WILL RENDER A BID NON-RESPONSIVE OR AN OFFER NOT REASONABLY SUSCEPTIBLE OF BEING SELECTED FOR AWARD

NOTE: INCONSISTENCY BETWEEN THE ASSERTIONS ON THIS FORM AND THE INFORMATION PROVIDED ON THE *MBE PARTICIPATION SCHEDULE* (ATTACHMENT B) MAY RENDER A BID NON-RESPONSIVE OR AN OFFER NOT REASONABLY SUSCEPTIBLE OF BEING SELECTED FOR AWARD

1 ☐ I have met the overall MBE goal and MBE subgoals for this project. I submit with this Affidavit [Attachment A] the *MBE Participation Schedule* [Attachment B], which details how I will reach that goal.

or

2 ☐ After having made a good-faith effort to achieve the overall MBE goal and MBE subgoals for this project, I can achieve partial success only. I submit with this Affidavit [Attachment A] the *MBE Participation Schedule* [Attachment B], which details the MBE participation I have achieved.

I request a partial waiver as follows:

- Waiver of overall MBE subcontract participation goal: ____ %
- Waiver of MBE subcontract participation subgoals, if applicable:
  - ____ % for certified African American-owned businesses and
  - ____ % for certified Asian American-owned businesses.

Within 10 days of being informed that I am the apparent awardee, I will submit *MBE Waiver Documentation* [Attachment F] (with supporting documentation).

3 ☐ After having made a good faith effort to achieve the overall MBE goal and MBE subgoals for this project, I am unable to achieve any portion of the goal or subgoals. I submit with this Affidavit [Attachment A] the *MBE Participation Schedule* [Attachment B].

I request a full waiver.

Within 10 days of being informed that I am the apparent awardee, I will submit *MBE Waiver Documentation* [Attachment F] (with supporting documentation).

Part III.

I understand that if I am the apparent awardee or conditional awardee, I must submit **within 10 working days** after receiving notice of the potential award or within 10 days after the date of conditional award – whichever is earlier – the:

- *Outreach Efforts Compliance Statement* (Attachment C)
- *Subcontractor Project Participation Statement* (Attachment D)
- *Minority Subcontractors Unavailability Certificate* (Attachment E) (if applicable)
- Any other documentation the Procurement Officer requires to ascertain my responsibility in connection with the MBE participation goal and subgoals

I acknowledge that if I fail to timely return complete documents, the Procurement Officer may determine that I am not responsible and therefore not eligible for contract award. If the contract has been awarded, the award is voidable.

I acknowledge that the MBE subcontractors/suppliers listed in the *MBE Participation Schedule* and any additional MBE subcontractor/suppliers identified in the *Subcontractor Project Participation Statement* will be used to accomplish the percentage of MBE participation that I intend to achieve.

In the solicitation of subcontract quotations or offers, MBE subcontractors were provided the same information and amount of time to respond as were non-MBE subcontractors.

The solicitation process was conducted in such a manner so as to not place MBE subcontractors at a competitive disadvantage to non-MBE subcontractors.

I solemnly affirm under the penalties of perjury that this Affidavit is true to the best of my knowledge, information, and belief.

_____	_____
Bidder/Offeror Name	Affiant Signature
_____	_____
Address	Printed Name & Title
_____	_____
Address (continued)	Date

October 2017

ATTACHMENT B
MBE PARTICIPATION SCHEDULE REVISED

This document must be included with the bid or offer. If the bidder or offeror fails to submit this form with the bid or offer as required, the procurement officer shall deem the bid non- responsive or shall determine that the offer is not reasonably susceptible of being selected for award.

1. Prime Contractor's Name	2. Prime Contractor's Address/Telephone Number
3. Project/School Name	4. Project/School Location
5. LEA Name:. PSC Number:	6. Base Bid Amount $ _____ Acceptance Alternates $ _____ Total $ _____

7a.
Minority Firm Name: _____
Minority Firm Address: _____ Telephone Number: _____
MDOT Firm Certification Number: _____ NAICS Code: _____
□African American □ Asian American □ Native American □ Women □ Hispanic □ Disabled

Subcontractor Firm (Select One)	Allowable Percentage	Percentage of Total Contract	Subcontractor Dollar Amount	Participation Amount
MDOT Certified Firm	100%		$	$
MDOT Certified Prime Contractor	50% of established goal OR 100% of one subgroup contract subgoal		$	$
MDOT Certified Supplier, Wholesaler and Regular Dealer	60%		$	$

7b
Minority Firm Name: _____
Minority Firm Address: _____ Telephone Number: _____
MDOT Firm Certification Number: _____ NAICS Code: _____
□African American □ Asian American □ Native American □ Women □ Hispanic □ Disabled

Subcontractor Firm (Select One)	Allowable Percentage	Percentage of Total Contract	Subcontractor Dollar Amount	Participation Amount
MDOT Certified Firm	100%		$	$
MDOT Certified Prime Contractor	50% of established goal OR 100% of one subgroup contract subgoal		$	$
MDOT Certified Supplier, Wholesaler and Regular Dealer	60%		$	$

7c
Minority Firm Name: _____
Minority Firm Address: _____ Telephone Number: _____
MDOT Firm Certification Number: _____ NAICS Code: _____
□African American □ Asian American □ Native American □ Women □ Hispanic □ Disabled

Subcontractor Firm (Select One)	Allowable Percentage	Percentage of Total Contract	Subcontractor Dollar Amount	Participation Amount
MDOT Certified Firm	100%		$	$
MDOT Certified Prime Contractor	50% of established goal OR 100% of one subgroup contract subgoal		$	$
MDOT Certified Supplier, Wholesaler and Regular Dealer	60%		$	$

8. MBE Total Amount	9. Total MBE Percent of Entire Contract
10. Form Prepared by: Name: _____ Title: _____ Date: _____	11. Reviewed and Accepted by Board of Edu. MBE Liaison Name: _____ Title: _____ Date _____

Total MBE Participation: $ _____ _____%
Total African-American Participation: $ _____ _____%
Total Asian-American MBE Participation: $ _____ _____%
Total Other Participation: $_____ _____%

AIA® Document A101® – 2017

Standard Form of Agreement Between Owner and Contractor *where the basis of payment is a Stipulated Sum*

AGREEMENT made as of the day of in the year
(In words, indicate day, month and year.)

BETWEEN the Owner:
(Name, legal status, address and other information)

The Board of Education of Frederick County
191 South East Street
Frederick, Maryland 21701-5918

and the Contractor:
(Name, legal status, address and other information)

for the following Project:
(Name, location and detailed description)

Lincoln "A" Facility
Roof Replacement
250 Madison Street
Frederick, Maryland 21701
FCPS Bid 21C5

The Architect:
(Name, legal status, address and other information)

Bushey Feight Morin Architects
473 North Potomac Street
Hagerstown, Maryland 21740
Telephone Number: (301) 733-5600
Fax Number: (301) 733-5612

The Owner and Contractor agree as follows.

ADDITIONS AND DELETIONS:
The author of this document has added information needed for its completion. The author may also have revised the text of the original AIA standard form. An *Additions and Deletions Report* that notes added information as well as revisions to the standard form text is available from the author and should be reviewed. A vertical line in the left margin of this document indicates where the author has added necessary information and where the author has added to or deleted from the original AIA text.

This document has important legal consequences. Consultation with an attorney is encouraged with respect to its completion or modification.

The parties should complete A101®–2017, Exhibit A, Insurance and Bonds, contemporaneously with this Agreement. AIA Document A201®–2017, General Conditions of the Contract for Construction, is adopted in this document by reference. Do not use with other general conditions unless this document is modified.

Init.
/

AIA Document A101® – 2017. Copyright © 1915, 1918, 1925, 1937, 1951, 1958, 1961, 1963, 1967, 1974, 1977, 1987, 1991, 1997, 2007 and 2017 by The American Institute of Architects. All rights reserved. The "American Institute of Architects," "AIA," the AIA Logo, "A101," and "AIA Contract Documents" are registered trademarks and may not be used without permission. This document was produced by AIA software at 12:24:35 ET on 11/11/2020 under Order No.6115176972 which expires on 09/19/2021, is not for resale, is licensed for one-time use only, and may only be used in accordance with the AIA Contract Documents® Terms of Service. To report copyright violations, e-mail copyright@aia.org.
User Notes: (1383748425)

TABLE OF ARTICLES

1 THE CONTRACT DOCUMENTS

2 THE WORK OF THIS CONTRACT

3 DATE OF COMMENCEMENT AND SUBSTANTIAL COMPLETION

4 CONTRACT SUM

5 PAYMENTS

6 DISPUTE RESOLUTION

7 TERMINATION OR SUSPENSION

8 MISCELLANEOUS PROVISIONS

9 ENUMERATION OF CONTRACT DOCUMENTS

ARTICLE 1 THE CONTRACT DOCUMENTS

The Contract Documents consist of this Agreement, Conditions of the Contract (General, Supplementary, and other Conditions), Drawings, Specifications, Addenda issued prior to execution of this Agreement, other documents listed in this Agreement, and Modifications issued after execution of this Agreement, all of which form the Contract, and are as fully a part of the Contract as if attached to this Agreement or repeated herein. The Contract represents the entire and integrated agreement between the parties hereto and supersedes prior negotiations, representations, or agreements, either written or oral. An enumeration of the Contract Documents, other than a Modification, appears in Article 9.

ARTICLE 2 THE WORK OF THIS CONTRACT

§ 2.1 The Contractor shall fully execute the Work described in the Contract Documents, except as specifically indicated in the Contract Documents to be the responsibility of others. In addition to performing the Work as described in the Contract Documents, the Contractor shall perform the Work in accordance with all applicable ordinances, building codes, statutes, regulations and guidelines of all federal, state and local government authorities having jurisdiction over the Project.

§ 2.2 The Architect will schedule and the Contractor shall attend the Pre-Construction Meeting and Progress Meetings. The Contractor shall require the attendance of Subcontractors at the meetings as needed or as required by the Architect or Owner. The Contractor shall provide to the Architect and Owner either prior to or during each progress meeting such reports and documentation requested by the Architect and Owner regarding the progress and performance of the Work and the percentage of completion of Contract and all Subcontracts.

§ 2.3 In addition to progress and review meetings, the Contractor shall attend additional meetings with the Owner as needed and at the Owner's sole discretion. The Owner may designate the location and time of such meetings.

§ 2.4 Within (14) days after the Owner issues the notice to proceed the Contractor shall submit a Preliminary Contractor Schedule, the Preliminary Contractor Schedule shall indicate task(s) (the work), duration(s) (start and completion) and be compliant with the dates indicated for Substantial Completion as required by the contract. Preliminary Contractor Schedule shall be in a Critical Path Method (CPM) and bar chart format, indicating sufficient detail, task(s) (the work) and durations(s) (start and completion) of each major item of the Work, the current status of each major item of Work indicating staffing and equipment to comply with the Schedule. The Contract Schedule must be submitted for the Owners review as a condition precedent to the Contractor submission of the first application for Payment. Contractor shall provide additional detail when requested by the Architect or Owner and update the Contractor Schedule to be compliant with the Substantial Completion date(s) including only owner approves time extensions. Within 7 days of a request by the Architect or Owner, the Contractor shall furnish to the Architect and Owner a Progress Schedule showing the current progress and completion stage of the Work as compared to the Contract Schedule. Progress Schedule shall clearly identify any item of Work, which is behind the Contract Schedule

AIA Document A101® – 2017. Copyright © 1915, 1918, 1925, 1937, 1951, 1958, 1961, 1963, 1967, 1974, 1977, 1987, 1991, 1997, 2007 and 2017 by The American Institute of Architects. All rights reserved. The "American Institute of Architects," "AIA," the AIA Logo, "A101," and "AIA Contract Documents" are registered trademarks and may not be used without permission. This document was produced by AIA software at 12:24:35 ET on 11/11/2020 under Order No.6115176972 which expires on 09/19/2021, is not for resale, is licensed for one-time use only, and may only be used in accordance with the AIA Contract Documents® Terms of Service. To report copyright violations, e-mail copyright@aia.org.
User Notes:
(1383748425)

along with the Contractor's increase in manpower and equipment necessary to comply with the updated Contract Schedule.

ARTICLE 3 DATE OF COMMENCEMENT AND SUBSTANTIAL COMPLETION

§ 3.1 The date of commencement of the Work shall be:
(Check one of the following boxes.)

[ ] The date of this Agreement.

[X] A date set forth in a notice to proceed issued by the Owner.

[ ] Established as follows:
(Insert a date or a means to determine the date of commencement of the Work.)

If a date of commencement of the Work is not selected, then the date of commencement shall be the date of this Agreement.

§ 3.2 The Contract Time shall be measured from the date of commencement of the Work.

§ 3.3 Substantial Completion

§ 3.3.1 Subject to adjustments of the Contract Time as provided in the Contract Documents, the Contractor shall achieve Substantial Completion of the entire Work:
(Check one of the following boxes and complete the necessary information.)

[ ] Not later than ( ) calendar days from the date of commencement of the Work.

[X] By the following date:

§ 3.3.2 The Contractor acknowledges and agrees that time is of the essence in achieving Substantial Completion and that a delay in achieving Substantial Completion will result in increased costs to the Owner. In the event that the Contractor does not achieve Substantial Completion as stipulated in Article 3.3, including approved extensions, the Contractor and the Contractor's surety shall be liable for and shall pay liquidated damages to the Owner. For each calendar day required to achieve Substantial Completion beyond the Substantial Completion Date authorized by the Contract, the Contractor shall pay to the Owner all direct costs charged to the Owner plus liquidated damages on account of Owner's staff expense and on account of student inconvenience, disruption, and dislocation the sum of $1.00 per student based upon an expected enrollment of students for total liquidated damages in the amount of $ per day.

(Table deleted)

§ 3.3.3 Subject to adjustments of the Contract Time as provided in the Contract Documents, if portions of the Work are to be completed prior to Substantial Completion of the entire Work, the Contractor shall achieve Substantial Completion of such portions by the following dates:

Portion of Work	Substantial Completion Date

, subject to adjustments of this Contract Time as provided in the Contract Documents.
(Insert provisions, if any, for liquidated damages relating to failure to achieve Substantial Completion on time or for bonus payments for early completion of the Work.)

§ 3.4 The Contractor shall not be entitled to any form of damages for being able to achieve Substantial Completion earlier than the date set forth in Paragraph 3.3. Additionally, a Contractor shall not be entitled to any form of damages or other compensation from Owner by reason of delay or interruptions of its work caused by other contractors or utilities working on the project. Contractor shall indemnify Owner against any and all loss, cost, and damages that the

AIA Document A101® – 2017. Copyright © 1915, 1918, 1925, 1937, 1951, 1958, 1961, 1963, 1967, 1974, 1977, 1987, 1991, 1997, 2007 and 2017 by The American Institute of Architects. All rights reserved. The "American Institute of Architects," "AIA," the AIA Logo, "A101," and "AIA Contract Documents" are registered trademarks and may not be used without permission. This document was produced by AIA software at 12:24:35 ET on 11/11/2020 under Order No.6115176972 which expires on 09/19/2021, is not for resale, is licensed for one-time use only, and may only be used in accordance with the AIA Contract Documents® Terms of Service. To report copyright violations, e-mail copyright@aia.org.
User Notes: (1383748425)

Owner may be caused to sustain by reason of claims from any other contractor working on the Project caused in whole or in part by the acts of the Contractor or those for whom it is responsible

ARTICLE 4 CONTRACT SUM

§ 4.1 The Owner shall pay the Contractor the Contract Sum in current funds for the Contractor's performance of the Contract. The Contract Sum shall be ($), subject to additions and deductions as provided in the Contract Documents.

§ 4.2 Alternates

§ 4.2.1 Alternates, if any, included in the Contract Sum:

Item	Price

§ 4.2.2 Subject to the conditions noted below, the following alternates may be accepted by the Owner following execution of this Agreement. Upon acceptance, the Owner shall issue a Modification to this Agreement.
(Insert below each alternate and the conditions that must be met for the Owner to accept the alternate.)

Item	Price	Conditions for Acceptance

§ 4.3 Allowances, if any, included in the Contract Sum:
(Identify each allowance.)

Item	Price

§ 4.4 Unit prices, if any:
(Identify the item and state the unit price and quantity limitations, if any, to which the unit price will be applicable.)

Item	Units and Limitations	Price per Unit ($0.00)

§ 4.5 Liquidated damages, if any:
(Insert terms and conditions for liquidated damages, if any.)

See paragraph 3.3.2

§ 4.6 Other:
(Insert provisions for bonus or other incentives, if any, that might result in a change to the Contract Sum.)

ARTICLE 5 PAYMENTS

§ 5.1 Progress Payments

§ 5.1.1 Based upon Applications for Payment submitted to the Architect by the Contractor and Certificates for Payment issued by the Architect, the Owner shall make progress payments on account of the Contract Sum to the Contractor as provided below and elsewhere in the Contract Documents.

§ 5.1.2 The period covered by each Application for Payment shall be one calendar month ending on the last day of the month, or as follows:

The billing period shall be as required herein and as indicated by the specifications. Contactor is required to submit estimated billing by the 28th of each month for the current month. The Contractor must provide a pencil copy for the Architect and Owners review. Contractors' failure to provide estimate billing may delay processing the Application for Payment. Frederick County Public Schools requires overall estimates in compliance with Frederick County Government's funding requirements and in order to obtain funds for Contractor Applications for Payment.

AIA Document A101® – 2017. Copyright © 1915, 1918, 1925, 1937, 1951, 1958, 1961, 1963, 1967, 1974, 1977, 1987, 1991, 1997, 2007 and 2017 by The American Institute of Architects. All rights reserved. The "American Institute of Architects," "AIA," the AIA Logo, "A101," and "AIA Contract Documents" are registered trademarks and may not be used without permission. This document was produced by AIA software at 12:24:35 ET on 11/11/2020 under Order No.6115176972 which expires on 09/19/2021, is not for resale, is licensed for one-time use only, and may only be used in accordance with the AIA Contract Documents® Terms of Service. To report copyright violations, e-mail copyright@aia.org.
User Notes: (1383748425)

§ 5.1.3 Provided that an Application for Payment is received by the Architect not later than the first day of a month, the Owner shall make payment of the amount certified to the Contractor not later than the Twenty Fifth (25th) day of the same month. If an Application for Payment is received by the Architect after the application date fixed above, payment of the amount certified shall be made by the Owner not later than thirty (30) days after the Architect receives the Application for Payment.
(Federal, state or local laws may require payment within a certain period of time.)

§ 5.1.4 Each Application for Payment shall be based on the most recent schedule of values submitted by the Contractor in accordance with the Contract Documents. The schedule of values shall allocate the entire Contract Sum among the various portions of the Work. The schedule of values shall be prepared in such form, and supported by such data to substantiate its accuracy, as the Architect may require. This schedule of values shall be used as a basis for reviewing the Contractor's Applications for Payment.

§ 5.1.5 Applications for Payment shall show the percentage of completion of each portion of the Work as of the end of the period covered by the Application for Payment.

§ 5.1.6 In accordance with AIA Document A201™–2017, General Conditions of the Contract for Construction, and subject to other provisions of the Contract Documents, the amount of each progress payment shall be computed as follows:

.1 Take that portion of the Contract Sum properly allocable to completed Work as determined by multiplying the percentage completion of each portion of the Work by the share of the Contract Sum allocated to that portion of the Work in the schedule of values, less retainage of five percent (5 %). Pending final determination of cost to the Owner of changes in the Work, amounts not in dispute shall be included as provided in Section 7.3.9 of AIA Document A201™–2007, General Conditions of the Contract for Construction;

.2 Add that portion of the Contract Sum properly allocable to materials and equipment delivered and suitably stored at the site for subsequent incorporation in the completed construction (or, if approved in advance by the Owner, suitably stored off the site at a location agreed upon in writing), less retainage of five percent (5 %);

.3 Subtract the aggregate of previous payments made by the Owner; and

.4 Subtract amounts, if any, for which the Architect has withheld or nullified a Certificate for Payment as provided in Section 9.5 of AIA Document A201–2007 and,

.5 The requirements of 5.1.8 Reduction or limitation of retainage.

(Paragraphs deleted)
§ 5.1.7 Retainage The progress payment amount determined in accordance with Section 5.1.6 shall be further modified under the following circumstances:

.1 Add, upon Substantial Completion of the Work, a sum sufficient to increase the total payments to the full amount of the Contract Sum, less such amounts as the Architect shall determine for incomplete Work, retainage applicable to such work and unsettled claims; and
(Section 9.8.5 of AIA Document A201–2007 requires release of applicable retainage upon Substantial Completion of Work with consent of surety, if any.)

.2 Add, if final completion of the Work is thereafter materially delayed through no fault of the Contractor, any additional amounts payable in accordance with Section 9.10.3 of AIA Document A201–2007.

(Paragraphs deleted)
§ 5.1.8 Reduction or limitation of retainage, if any, shall be as follows:
(If it is intended, prior to Substantial Completion of the entire Work, to reduce or limit the retainage resulting from the percentages inserted in Sections 5.1.6.1 and 5.1.6.2 above, and this is not explained elsewhere in the Contract Documents, insert here provisions for such reduction or limitation.)

AIA Document A101® – 2017. Copyright © 1915, 1918, 1925, 1937, 1951, 1958, 1961, 1963, 1967, 1974, 1977, 1987, 1991, 1997, 2007 and 2017 by The American Institute of Architects. All rights reserved. The "American Institute of Architects," "AIA," the AIA Logo, "A101," and "AIA Contract Documents" are registered trademarks and may not be used without permission. This document was produced by AIA software at 12:24:35 ET on 11/11/2020 under Order No.6115176972 which expires on 09/19/2021, is not for resale, is licensed for one-time use only, and may only be used in accordance with the AIA Contract Documents® Terms of Service. To report copyright violations, e-mail copyright@aia.org.
User Notes: (1383748425)

Five percent (5%) retainage shall be held from progress payments. After issuance of a Certificate of Substantial Completion for the Contract Work, retainage may be reduced at the Owner's sole and discretion. When the Owner and Architect agree that the work, including all Punch List items, has been satisfactorily completed, the retainage may be reduced at the Owner's sole option to one percent (1%). Any retainage reduction must be approved by the Architect, Owner and Surety prior to submitting an Application for Payment reflecting such reductions and shall include an executed AIA G707A Consent of Surety to reduction in or Partial Release of Retainage or AIA G707 Consent of Surety to Final Payment.

§ 5.1.9 Except with the Owner's prior approval, the Contractor shall not make advance payments to suppliers for materials or equipment which have not been delivered and stored at the site.

§ 5.2 Final Payment

§ 5.2.1 Final payment, constituting the entire unpaid balance of the Contract Sum, shall be made by the Owner to the Contractor when

.1 the Contractor has fully performed the Contract except for the Contractor's responsibility to correct Work as provided in Article 12 of AIA Document A201–2017, and to satisfy other requirements, if any, which extend beyond final payment; and

.2 a final Certificate for Payment has been issued by the Architect.

§ 5.2.2 The Owner's final payment to the Contractor shall be made no later than Thirty (30) days after the issuance of the Architect's final Certificate for Payment, or as follows:

The Contractor shall deliver to the Owner:

a. Final Releases of Liens and Waiver of Claims from the Contractor; and
b. "As-built or Record Drawings" Plans and Specifications showing all changes, locations and installation shall be submitted to the architect for approval and forwarded to the Owner for his approval and acceptance, "As-built or Record Drawings" shall be provided on a drawing set sealed with the Architect's stamp; and
c. Three (3) complete sets of warranties and guarantees in three-ring binders, indexed with a table of contents approved by the Architect; and
d. A statement from the Contractor that there exist no pending or threatened claims against the Owner relating to the Work or for which the Owner may be liable which are unresolved or a statement of any unresolved issues; and
e. All punch list items shall be satisfactorily completed, each punch list item signed and dated indicating when the correction was completed and inspected by the Owner, Architect and Engineer; and
f. The Contractor shall deliver to the Owner attesting that various items of Work have been satisfactory completed in accordance with the requirements of the Contract Documents and in accordance with industry standards of workmanship.

(Paragraphs deleted)

ARTICLE 6 DISPUTE RESOLUTION

§ 6.1 Initial Decision Maker

The Architect will serve as the Initial Decision Maker pursuant to Article 15 of AIA Document A201–2017, unless the parties appoint below another individual, not a party to this Agreement, to serve as the Initial Decision Maker.
(If the parties mutually agree, insert the name, address and other contact information of the Initial Decision Maker, if other than the Architect.)

§ 6.2 Binding Dispute Resolution

For any Claim subject to, but not resolved by, mediation pursuant to Article 15 of AIA Document A201–2017, the method of binding dispute resolution shall be as follows:
(Check the appropriate box.)

[ ] Arbitration pursuant to Section 15.4 of AIA Document A201–2017

AIA Document A101® – 2017. Copyright © 1915, 1918, 1925, 1937, 1951, 1958, 1961, 1963, 1967, 1974, 1977, 1987, 1991, 1997, 2007 and 2017 by The American Institute of Architects. All rights reserved. The "American Institute of Architects," "AIA," the AIA Logo, "A101," and "AIA Contract Documents" are registered trademarks and may not be used without permission. This document was produced by AIA software at 12:24:35 ET on 11/11/2020 under Order No.6115176972 which expires on 09/19/2021, is not for resale, is licensed for one-time use only, and may only be used in accordance with the AIA Contract Documents® Terms of Service. To report copyright violations, e-mail copyright@aia.org.
User Notes: (1383748425)

[X] Litigation in a court of competent jurisdiction

[ ] Other *(Specify)*

If the Owner and Contractor do not select a method of binding dispute resolution, or do not subsequently agree in writing to a binding dispute resolution method other than litigation, Claims will be resolved by litigation in a court of competent jurisdiction.

ARTICLE 7 TERMINATION OR SUSPENSION

§ 7.1 The Contract may be terminated by the Owner or the Contractor as provided in Article 14 of AIA Document A201–2017.

§ 7.1.1 If the Contract is terminated for the Owner's convenience in accordance with Article 14 of AIA Document A201–2017, then the Owner shall pay the Contractor a termination fee as follows:
(Insert the amount of, or method for determining, the fee, if any, payable to the Contractor following a termination for the Owner's convenience.)

§ 7.2 The Work may be suspended by the Owner as provided in Article 14 of AIA Document A201–2017.

ARTICLE 8 MISCELLANEOUS PROVISIONS

§ 8.1 Where reference is made in this Agreement to a provision of AIA Document A201–2017 or another Contract Document, the reference refers to that provision as amended or supplemented by other provisions of the Contract Documents.

§ 8.2 Payments due and unpaid under the Contract shall bear interest from the date payment is due at the rate stated below, or in the absence thereof, at the legal rate prevailing from time to time at the place where the Project is located.
(Insert rate of interest agreed upon, if any.)

0.0 % zero percentage

(Paragraphs deleted)

§ 8.23 The Owner's representative:
(Name, address, email address, and other information)

Theresa R. Alban, Ph.D., Superintendent of Schools

§ 8.4 The Contractor's representative:
(Name, address, email address, and other information)

(Paragraphs deleted)

AIA Document A101® – 2017. Copyright © 1915, 1918, 1925, 1937, 1951, 1958, 1961, 1963, 1967, 1974, 1977, 1987, 1991, 1997, 2007 and 2017 by The American Institute of Architects. All rights reserved. The "American Institute of Architects," "AIA," the AIA Logo, "A101," and "AIA Contract Documents" are registered trademarks and may not be used without permission. This document was produced by AIA software at 12:24:35 ET on 11/11/2020 under Order No.6115176972 which expires on 09/19/2021, is not for resale, is licensed for one-time use only, and may only be used in accordance with the AIA Contract Documents® Terms of Service. To report copyright violations, e-mail copyright@aia.org.
User Notes:

§ 8.5 Neither the Owner's nor the Contractor's representative shall be changed without ten days' prior notice to the other party.

§ 8.6

(Paragraphs deleted)

Other provisions:

§ 8.6.1 The cost of reproducing copies of any additional Construction Documents required for construction shall be at the sole cost of the Contractor.

§ 8.6.2 The Contractor, Subcontractors and all employees shall conform to all Board of Education policies when on Board of Education property, including but not limited to no smoking and the possession of deadly weapons.

§ 8.6.3 The Contractor shall appoint a safety officer who shall be available to the Owner. On a regular basis such safety officer shall inspect the job site for compliance to OSHA and MOSHA requirements. In the event of any job site violations of OSHA or MOSHA, the Contractor shall immediately rectify the situation and bring the job site into compliance.

§ 8.6.4 The Owner may issue a Notice to Contractor for failure to comply with the Contract requirements and/or the Contract Documents. Contractor must respond to such notice as practical, and Owner must receive a written response within two (2) business days of the Contractor's receipt of such notice. Inspections by Owner or the Owner's failure to issue such Notices shall not relieve the Contractor from full compliance with the Contract Documents.

§ 8.6.5 When Work is to be completed during operation of and use of the building Contractor shall ensure all building systems and egress/ingress remain operable and effective during the hours that the school is in use as determined by the Principal. Dividing walls or partitions shall be erected to separate construction and demolition activities from building activities and egress/ingress shall be maintained as stipulated by the relevant Government authorities, including the Fire Marshal.

§ 8.6.6 The Contractor and its Subcontractors shall staff the project with competent and experienced superintendents, foreman, and journeyman. The Electrical contractor must provide a Master Electrician and the Plumbing contractor must provide a Master Plumber to work on the Project. The number of apprentices working on the Project shall not exceed the ratio of two apprentices for every journeyman. If requested, the Contractor shall, within twenty-four (24) hours, provide documentation outlining specific experience for a journeyman, foreman or superintendent.

§ 8.6.7 It is Contractor's sole responsibility to provide utilities, including but not limited to electricity, water, telephone, sewer and gas at the job site during the construction period, notwithstanding the indication of any utilities noted as existing in the Contract Documents.

§ 8.6.8 The Contractor shall promptly make available to the Owner complete copies of all executed Subcontracts and any changes, modifications or exclusions thereto, upon the Owner's request.

§ 8.6.9 The Architect or Engineer's approved shop drawings and or samples must be on site before work can begin on the applicable item of Work detailed on the shop drawings or stipulated in the specifications. The Contractor shall make the approved shop drawing available to the Owner's representative as needed to review the installation(s).

§ 8.6.10 All existing areas, interior and exterior, damaged during construction or renovation, are to be refurbished to their original condition.

§ 8.6.11 Any soil or excess excavation, including but not limited to rock, which is not required for the finished Work, shall be removed from the site as part of the Contract Sum.

§ 8.6.12 Notwithstanding any other contract provisions to the contrary, the mechanical system and plumbing system must be completely balances and such balance must be accepted by the Engineer, before the warranty/guarantee period will begin.

AIA Document A101® – 2017. Copyright © 1915, 1918, 1925, 1937, 1951, 1958, 1961, 1963, 1967, 1974, 1977, 1987, 1991, 1997, 2007 and 2017 by The American Institute of Architects. All rights reserved. The "American Institute of Architects," "AIA," the AIA Logo, "A101," and "AIA Contract Documents" are registered trademarks and may not be used without permission. This document was produced by AIA software at 12:24:35 ET on 11/11/2020 under Order No.6115176972 which expires on 09/19/2021, is not for resale, is licensed for one-time use only, and may only be used in accordance with the AIA Contract Documents® Terms of Service. To report copyright violations, e-mail copyright@aia.org.
User Notes:

§ 8.6.13 The Contractor shall provide not less than a 2 year warranty for the project, the 2 year warranty shall not diminish any extended warranty provided by equipment manufacturer's not limited to and including all HVAC equipment and Compressors.

§ 8.6.14 The Contractor and Subcontractors shall conform to all requirements of the following Maryland General Assembly Policies:

.1 Maryland General Assembly House Bill 642 – Children – Child Care Facilities, Public Schools and Nonpublic Schools – Contractors and Subcontractors.

.2 Maryland General Assembly Senate Bill 508 – Children Care Facilities, Public Schools and Nonpublic Schools – Contractors and Subcontractors.

.3 The Contractor and Subcontractors shall not knowingly hire or retain any individual who has been convicted of a crime involving:

1. An offense under 3-307 of the Criminal Law Article;
2. Child sexual abuse under 3-602 of the Criminal Law Article, or an offense under the laws of another state that would constitute child sexual abuse under 3-602 of the Criminal Law Article if committed in the State; or
3. A crime of violence as defined in 14-101 of the Criminal Law Article, or an offense under the laws of another state that would be a violation of 14-101 of the Criminal Law Article if committed in this State.

§ 8.7 Insurance and Bonds

§ 8.7.1 The Owner and the Contractor shall purchase and maintain insurance as set forth in AIA Document A101™–2017, Standard Form of Agreement Between Owner and Contractor where the basis of payment is a Stipulated Sum, Exhibit A, Insurance and Bonds, and elsewhere in the Contract Documents.**§ 8.7** Notice in electronic format, pursuant to Article 1 of AIA Document A201–2017, may be given in accordance with AIA Document E203™–2013, Building Information Modeling and Digital Data Exhibit, if completed, or as otherwise set forth below:
(If other than in accordance with AIA Document E203–2013, insert requirements for delivering notice in electronic format such as name, title, and email address of the recipient and whether and how the system will be required to generate a read receipt for the transmission.)

§ 8.8 Other provisions:

ARTICLE 9 ENUMERATION OF CONTRACT DOCUMENTS

§ 9.1 This Agreement is comprised of the following documents:

.1 AIA Document A101™–2017, Standard Form of Agreement Between Owner and Contractor

.2 AIA Document A201™–2017, General Conditions of the Contract for Construction

.3 AIA Document E203™–2013, Building Information Modeling and Digital Data Exhibit, if required, dated as indicated below:
(Insert the date of the E203-2013 incorporated into this Agreement.)

.5 Drawings

Number	Title	Date

.6 Specifications

Section	Title	Date	Pages

AIA Document A101® – 2017. Copyright © 1915, 1918, 1925, 1937, 1951, 1958, 1961, 1963, 1967, 1974, 1977, 1987, 1991, 1997, 2007 and 2017 by The American Institute of Architects. All rights reserved. The "American Institute of Architects," "AIA," the AIA Logo, "A101," and "AIA Contract Documents" are registered trademarks and may not be used without permission. This document was produced by AIA software at 12:24:35 ET on 11/11/2020 under Order No.6115176972 which expires on 09/19/2021, is not for resale, is licensed for one-time use only, and may only be used in accordance with the AIA Contract Documents® Terms of Service. To report copyright violations, e-mail copyright@aia.org.
User Notes:

.7 Addenda, if any:

Number	Date	Pages

Portions of Addenda relating to bidding or proposal requirements are not part of the Contract Documents unless the bidding or proposal requirements are also enumerated in this Article 9.

(Paragraphs deleted)

8 Other documents, if any, listed below:

(List here any additional documents that are intended to form part of the Contract Documents. AIA Document A201™–2017 provides that the advertisement or invitation to bid, Instructions to Bidders, sample forms, the Contractor's bid or proposal, portions of Addenda relating to bidding or proposal requirements, and other information furnished by the Owner in anticipation of receiving bids or proposals, are not part of the Contract Documents unless enumerated in this Agreement. Any such documents should be listed here only if intended to be part of the Contract Documents.)

Frederick County Public Schools Bid Documents for this projects Bid.

ARTICLE 10 INSURANCE AND BONDS

10.1 The Contractor shall purchase and maintain insurance and provide bonds as set forth in Article 11 of AIA Document A201–2017.

(State bonding requirements, if any, and limits of liability for insurance required in Article 11 of AIA Document A201–2017.)

10.2 Maryland Code 21-102 - A certificate of authority, or certified copy of a certificate of authority, issued by the Commissioner to a surety insurer shall be accepted as evidence of qualification to become sole surety on a bond, undertaking, recognizance, or other obligation required or allowed by law, or in the charter, ordinances, rules, or regulations of a municipal corporation, board, organization, court, judge, or public officer, without further proof or qualification regarding solvency, credit, or financial sufficiency to act as a surety or bidders may use bonding companies from Treasury approved sureties with an AM Best rating of A- or better rating.

10.3 The Contractor shall provide a Performance Bond with a Penal Sum equal to the Contract Sum. The Contractor shall provide a Payment Bond with a Penal Sum equal to the Contract Sum. All bonds shall be written on MD COMAR 21 07 02 10 Bond and will be from a surety company acceptable to the Owner.

10.4 The Contractor shall comply with the additional insurance requirements set forth below:

(a) The Board of Education of Frederick County, Frederick County Council, the State of Maryland and the other entities stipulated by the Owner shall be named as an additional insured for ongoing and completed operations on the Contractor policies other than Worker's Compensation.

(b) All policies shall stipulate the Owner is to receive written notice thirty (30) days before cancellation.
(c) The Owner is to receive insurance certificates evidencing the compliance of insurance requirements at least (10) ten days before Work commences.
(d) All insurance policies shall contain a Waiver of Subrogation in favor of the Owner.
(e) General Liability and Umbrella Insurance policies are to be in "Occurrence Form".
(f) Insurance policies shall provide primary coverage to The Board of Education of Frederick County and The Board of Commissioners of Frederick County and the State of Maryland as additional insureds for loss, injury and damage arising out of or associated with the Work under this agreement as opposed to pro-rate with, concurrent with excess to any other insurance coverages by the Owner other than insurance Worker's Compensation Insurance.
(g) The Contractor shall purchase and maintain all insurance from an insurer acceptable to the Owner and lawfully authorized to do business in Maryland.

AIA Document A101® – 2017. Copyright © 1915, 1918, 1925, 1937, 1951, 1958, 1961, 1963, 1967, 1974, 1977, 1987, 1991, 1997, 2007 and 2017 by The American Institute of Architects. All rights reserved. The "American Institute of Architects," "AIA," the AIA Logo, "A101," and "AIA Contract Documents" are registered trademarks and may not be used without permission. This document was produced by AIA software at 12:24:35 ET on 11/11/2020 under Order No.6115176972 which expires on 09/19/2021, is not for resale, is licensed for one-time use only, and may only be used in accordance with the AIA Contract Documents® Terms of Service. To report copyright violations, e-mail copyright@aia.org.
User Notes: (1383748425)

10.5 The Owner shall provide and maintain Builder's Risk Protection throughout the project. The Contractor shall pay the cost of any deductible(s) required by the Builders Risk Protection as provided by the Owner. This provision shall not release the contractor of the obligation to complete the work according to plans and specifications required by the contract and shall be obligated to full performance of the contract's undertaking. For projects where Builders Risk coverage is not applicable, the Contractor will insure all tools, equipment, and property to be installed.

10.6 The Contractor shall provide insurance pursuant to the requirements set forth below:

Type of insurance or bond	**Limit of liability or bond amount ($0.00)**
Part 1 Worker's Compensation Insurance	as required by statute
Part 2 Employers Liability:	
Bodily Injury by Accident	$ 500,000.00 each accident
Bodily Injury by Disease	$ 500,000.00 policy limits
Bodily Injury by Disease	$ 500,000.00 each employee
Commercial General Liability Insurance, to include, premises, products, completed operations, personal injury and contractual: Aggregate to apply Per Project./Per Location	$1,000,000.00
Each Occurrence	$1,000,000.00
General aggregate Limit (Per Site)	$2,000,000.00 aggregate limit
Products and complete operation	$1,000,000.00 each occurrence Limit
Personal & advertising injury	$1,000,000.00
Fire damage	$ 50,000.00
Medical Expense (Any One Person)	$ 5,000.00 each occurrence
General Liability insurance shall provide coverage for:	
Completed Operations to meet the Statute of Repose & Statute of Limitations;	
Independent Contractors	
Contractual Liability	
Broad From Property Damage	
Liability arising from Explosion, Collapse and Underground Damage (X, C, U)	
Additional insured Endorsement providing coverage as required in section 10.4 (a)	
Terrorism-Certified & Non Certified	
Option (b1)	
Automobile Liability Insurance, including owned, non-owned and hired vehicles	$1,000,000.00 each person
Bodily injury liability	$1,000,000.00 each occurrence
Property damage liability	
Option (b2)	$1,000,000.00 each accident
Combined single limit Bodily injury or property damage liability	
Umbrella Excess Liability (true following form)*	$5,000,000.00 per Occurrence $5,000,000.00 General Aggregate $5,000,000.00 Products & Completed Operations
Any construction contractor providing Mass Grading, Masonry, Structural Steel, Superstructure or foundation concrete, Mechanical or Electrical contractors shall be required to carry the following Umbrella Excess Liability (true following form) minimum limits:	$8,000,000.00 Each Occurrence $8,000,000.00 General Aggregate $8,000,000.00 Products & Completed Operations
Contractors Pollution Liability for contractors engaged in testing for,	

AIA Document A101® – 2017. Copyright © 1915, 1918, 1925, 1937, 1951, 1958, 1961, 1963, 1967, 1974, 1977, 1987, 1991, 1997, 2007 and 2017 by The American Institute of Architects. All rights reserved. The "American Institute of Architects," "AIA," the AIA Logo, "A101," and "AIA Contract Documents" are registered trademarks and may not be used without permission. This document was produced by AIA software at 12:24:35 ET on 11/11/2020 under Order No.6115176972 which expires on 09/19/2021, is not for resale, is licensed for one-time use only, and may only be used in accordance with the AIA Contract Documents® Terms of Service. To report copyright violations, e-mail copyright@aia.org.
User Notes:

monitoring, clean-up, removal, containing, detoxifying, neutralizing, transporting, handling, storage treatment, or disposing of or processing any waste pollutants. *CGL & Umbrella limits can vary, but the combined per Occurrence and Aggregate totals must meet or exceed the required occurrence and aggregate limits specified here	$1,000,000.00 per Occurrence $1,000,000.00 Aggregate

This Agreement entered into as of the day and year first written above.

OWNER *(Signature)*	**CONTRACTOR** *(Signature)*
Theresa R. Alban, Ph.D., Superintendent of Schools *(Printed name and title)*	*(Printed name and title)*

AIA Document A101® – 2017. Copyright © 1915, 1918, 1925, 1937, 1951, 1958, 1961, 1963, 1967, 1974, 1977, 1987, 1991, 1997, 2007 and 2017 by The American Institute of Architects. All rights reserved. The "American Institute of Architects," "AIA," the AIA Logo, "A101," and "AIA Contract Documents" are registered trademarks and may not be used without permission. This document was produced by AIA software at 12:24:35 ET on 11/11/2020 under Order No.6115176972 which expires on 09/19/2021, is not for resale, is licensed for one-time use only, and may only be used in accordance with the AIA Contract Documents® Terms of Service. To report copyright violations, e-mail copyright@aia.org.
User Notes:

Additions and Deletions Report for
AIA® Document A101® – 2017

This Additions and Deletions Report, as defined on page 1 of the associated document, reproduces below all text the author has added to the standard form AIA document in order to complete it, as well as any text the author may have added to or deleted from the original AIA text. Added text is shown underlined. Deleted text is indicated with a horizontal line through the original AIA text.

Note: This Additions and Deletions Report is provided for information purposes only and is not incorporated into or constitute any part of the associated AIA document. This Additions and Deletions Report and its associated document were generated simultaneously by AIA software at 12:24:35 ET on 11/11/2020.

PAGE 1

The Board of Education of Frederick County
191 South East Street
Frederick, Maryland 21701-5918

...

Lincoln "A" Facility
Roof Replacement
250 Madison Street
Frederick, Maryland 21701
FCPS Bid 21C5

...

Bushey Feight Morin Architects
473 North Potomac Street
Hagerstown, Maryland 21740
Telephone Number: (301) 733-5600
Fax Number: (301) 733-5612

PAGE 2

~~**EXHIBIT A INSURANCE AND BONDS**~~

...

~~The Contractor shall fully execute the Work described in the Contract Documents, except as specifically indicated in the Contract Documents to be the responsibility of others.~~ **§ 2.1** The Contractor shall fully execute the Work described in the Contract Documents, except as specifically indicated in the Contract Documents to be the responsibility of others. In addition to performing the Work as described in the Contract Documents, the Contractor shall perform the Work in accordance with all applicable ordinances, building codes, statutes, regulations and guidelines of all federal, state and local government authorities having jurisdiction over the Project.

§ 2.2 The Architect will schedule and the Contractor shall attend the Pre-Construction Meeting and Progress Meetings. The Contractor shall require the attendance of Subcontractors at the meetings as needed or as required by the Architect or Owner. The Contractor shall provide to the Architect and Owner either prior to or during each progress meeting such reports and documentation requested by the Architect and Owner regarding the progress and performance of the Work and the percentage of completion of Contract and all Subcontracts.

§ 2.3 In addition to progress and review meetings, the Contractor shall attend additional meetings with the Owner as needed and at the Owner's sole discretion. The Owner may designate the location and time of such meetings.

Additions and Deletions Report for AIA Document A101® – 2017. Copyright © 1915, 1918, 1925, 1937, 1951, 1958, 1961, 1963, 1967, 1974, 1977, 1987, 1991, 1997, 2007 and 2017 by The American Institute of Architects. All rights reserved. The "American Institute of Architects," "AIA," the AIA Logo, "A101," and "AIA Contract Documents" are registered trademarks and may not be used without permission. This document was produced by AIA software at 12:24:35 ET on 11/11/2020 under Order No.6115176972 which expires on 09/19/2021, is not for resale, is licensed for one-time use only, and may only be used in accordance with the AIA Contract Documents® Terms of Service. To report copyright violations, e-mail copyright@aia.org.
User Notes:

§ 2.4 Within (14) days after the Owner issues the notice to proceed the Contractor shall submit a Preliminary Contractor Schedule, the Preliminary Contractor Schedule shall indicate task(s) (the work), duration(s) (start and completion) and be compliant with the dates indicated for Substantial Completion as required by the contract. Preliminary Contractor Schedule shall be in a Critical Path Method (CPM) and bar chart format, indicating sufficient detail, task(s) (the work) and durations(s) (start and completion) of each major item of the Work, the current status of each major item of Work indicating staffing and equipment to comply with the Schedule. The Contract Schedule must be submitted for the Owners review as a condition precedent to the Contractor submission of the first application for Payment. Contractor shall provide additional detail when requested by the Architect or Owner and update the Contractor Schedule to be compliant with the Substantial Completion date(s) including only owner approves time extensions. Within 7 days of a request by the Architect or Owner, the Contractor shall furnish to the Architect and Owner a Progress Schedule showing the current progress and completion stage of the Work as compared to the Contract Schedule. Progress Schedule shall clearly identify any item of Work, which is behind the Contract Schedule along with the Contractor's increase in manpower and equipment necessary to comply with the updated Contract Schedule.

PAGE 3

[**X**] A date set forth in a notice to proceed issued by the Owner.

...

[**X**] By the following date:

§ 3.3.2 ~~Subject to adjustments of the Contract Time as provided in the Contract Documents, if portions of the Work are to be completed prior to Substantial Completion of the entire Work, the Contractor shall achieve Substantial Completion of such portions by the following dates:~~The Contractor acknowledges and agrees that time is of the essence in achieving Substantial Completion and that a delay in achieving Substantial Completion will result in increased costs to the Owner. In the event that the Contractor does not achieve Substantial Completion as stipulated in Article 3.3, including approved extensions, the Contractor and the Contractor's surety shall be liable for and shall pay liquidated damages to the Owner. For each calendar day required to achieve Substantial Completion beyond the Substantial Completion Date authorized by the Contract, the Contractor shall pay to the Owner all direct costs charged to the Owner plus liquidated damages on account of Owner's staff expense and on account of student inconvenience, disruption, and dislocation the sum of $1.00 per student based upon an expected enrollment of students for total liquidated damages in the amount of $ per day.

~~**Portion of Work** **Substantial Completion Date**~~

§ 3.3.3 ~~If the Contractor fails to achieve Substantial Completion as provided in this Section 3.3, liquidated damages, if any, shall be assessed as set forth in Section 4.5.~~Subject to adjustments of the Contract Time as provided in the Contract Documents, if portions of the Work are to be completed prior to Substantial Completion of the entire Work, the Contractor shall achieve Substantial Completion of such portions by the following dates:

Portion of Work **Substantial Completion Date**

, subject to adjustments of this Contract Time as provided in the Contract Documents.
(Insert provisions, if any, for liquidated damages relating to failure to achieve Substantial Completion on time or for bonus payments for early completion of the Work.)

§ 3.4 The Contractor shall not be entitled to any form of damages for being able to achieve Substantial Completion earlier than the date set forth in Paragraph 3.3. Additionally, a Contractor shall not be entitled to any form of damages or other compensation from Owner by reason of delay or interruptions of its work caused by other contractors or utilities working on the project. Contractor shall indemnify Owner against any and all loss, cost, and damages that the Owner may be caused to sustain by reason of claims from any other contractor working on the Project caused in whole or in part by the acts of the Contractor or those for whom it is responsible

PAGE 4

Additions and Deletions Report for AIA Document A101® – 2017. Copyright © 1915, 1918, 1925, 1937, 1951, 1958, 1961, 1963, 1967, 1974, 1977, 1987, 1991, 1997, 2007 and 2017 by The American Institute of Architects. All rights reserved. The "American Institute of Architects," "AIA," the AIA Logo, "A101," and "AIA Contract Documents" are registered trademarks and may not be used without permission. This document was produced by AIA software at 12:24:35 ET on 11/11/2020 under Order No.6115176972 which expires on 09/19/2021, is not for resale, is licensed for one-time use only, and may only be used in accordance with the AIA Contract Documents® Terms of Service. To report copyright violations, e-mail copyright@aia.org.
User Notes: (1383748425)

See paragraph 3.3.2

...

The billing period shall be as required herein and as indicated by the specifications. Contactor is required to submit estimated billing by the 28th of each month for the current month. The Contractor must provide a pencil copy for the Architect and Owners review. Contractors' failure to provide estimate billing may delay processing the Application for Payment. Frederick County Public Schools requires overall estimates in compliance with Frederick County Government's funding requirements and in order to obtain funds for Contractor Applications for Payment.

§ 5.1.3 Provided that an Application for Payment is received by the Architect not later than the first day of a month, the Owner shall make payment of the amount certified to the Contractor not later than the Twenty Fifth (25th) day of the same month. If an Application for Payment is received by the Architect after the application date fixed above, payment of the amount certified shall be made by the Owner not later than thirty (30) days after the Architect receives the Application for Payment.

PAGE 5

.1 Take that portion of the Contract Sum properly allocable to completed Work as determined by multiplying the percentage completion of each portion of the Work by the share of the Contract Sum allocated to that portion of the Work in the schedule of values, less retainage of five percent (5 %). Pending final determination of cost to the Owner of changes in the Work, amounts not in dispute shall be included as provided in Section 7.3.9 of AIA Document A201™–2007, General Conditions of the Contract for Construction;

.2 Add that portion of the Contract Sum properly allocable to materials and equipment delivered and suitably stored at the site for subsequent incorporation in the completed construction (or, if approved in advance by the Owner, suitably stored off the site at a location agreed upon in writing), less retainage of five percent (5 %);

.3 Subtract the aggregate of previous payments made by the Owner; and

.4 Subtract amounts, if any, for which the Architect has withheld or nullified a Certificate for Payment as provided in Section 9.5 of AIA Document A201–2007 and,

.5 The requirements of 5.1.8 Reduction or limitation of retainage.

~~**§ 5.1.6.1** The amount of each progress payment shall first include:~~

~~**.1** That portion of the Contract Sum properly allocable to completed Work;~~

~~**.2** That portion of the Contract Sum properly allocable to materials and equipment delivered and suitably stored at the site for subsequent incorporation in the completed construction, or, if approved in advance by the Owner, suitably stored off the site at a location agreed upon in writing; and~~

~~**.3** That portion of Construction Change Directives that the Architect determines, in the Architect's professional judgment, to be reasonably justified.~~

~~**§ 5.1.6.2** The amount of each progress payment shall then be reduced by:~~

~~**.1** The aggregate of any amounts previously paid by the Owner;~~

~~**.2** The amount, if any, for Work that remains uncorrected and for which the Architect has previously withheld a Certificate for Payment as provided in Article 9 of AIA Document A201–2017;~~

~~**.3** Any amount for which the Contractor does not intend to pay a Subcontractor or material supplier, unless the Work has been performed by others the Contractor intends to pay;~~

~~**.4** For Work performed or defects discovered since the last payment application, any amount for which the Architect may withhold payment, or nullify a Certificate of Payment in whole or in part, as provided in Article 9 of AIA Document A201–2017; and~~

~~**.5** Retainage withheld pursuant to Section 5.1.7.~~

§ 5.1.7 Retainage The progress payment amount determined in accordance with Section 5.1.6 shall be further modified under the following circumstances:

Additions and Deletions Report for AIA Document A101® – 2017. Copyright © 1915, 1918, 1925, 1937, 1951, 1958, 1961, 1963, 1967, 1974, 1977, 1987, 1991, 1997, 2007 and 2017 by The American Institute of Architects. All rights reserved. The "American Institute of Architects," "AIA," the AIA Logo, "A101," and "AIA Contract Documents" are registered trademarks and may not be used without permission. This document was produced by AIA software at 12:24:35 ET on 11/11/2020 under Order No.6115176972 which expires on 09/19/2021, is not for resale, is licensed for one-time use only, and may only be used in accordance with the AIA Contract Documents® Terms of Service. To report copyright violations, e-mail copyright@aia.org.
User Notes:

.1 Add, upon Substantial Completion of the Work, a sum sufficient to increase the total payments to the full amount of the Contract Sum, less such amounts as the Architect shall determine for incomplete Work, retainage applicable to such work and unsettled claims; and
(Section 9.8.5 of AIA Document A201–2007 requires release of applicable retainage upon Substantial Completion of Work with consent of surety, if any.)

.2 Add, if final completion of the Work is thereafter materially delayed through no fault of the Contractor, any additional amounts payable in accordance with Section 9.10.3 of AIA Document A201–2007.

~~**§ 5.1.7.1** For each progress payment made prior to Substantial Completion of the Work, the Owner may withhold the following amount, as retainage, from the payment otherwise due:~~
~~*(Insert a percentage or amount to be withheld as retainage from each Application for Payment. The amount of retainage may be limited by governing law.)*~~

~~**§ 5.1.7.1.1** The following items are not subject to retainage:~~
~~*(Insert any items not subject to the withholding of retainage, such as general conditions, insurance, etc.)*~~

~~**§ 5.1.7.2** Reduction or limitation of retainage, if any, shall be as follows:~~
~~*(If the retainage established in Section 5.1.7.1 is to be modified prior to Substantial Completion of the entire Work, including modifications for Substantial Completion of portions of the Work as provided in Section 3.3.2, insert provisions for such modifications.)*~~

~~**§ 5.1.7.3** Except as set forth in this Section 5.1.7.3, upon Substantial Completion of the Work, the Contractor may submit an Application for Payment that includes the retainage withheld from prior Applications for Payment pursuant to this Section 5.1.7. The Application for Payment submitted at Substantial Completion shall not include retainage as follows:~~
~~*(Insert any other conditions for release of retainage upon Substantial Completion.)*~~

§ 5.1.8 ~~If final completion of the Work is materially delayed through no fault of the Contractor, the Owner shall pay the Contractor any additional amounts in accordance with Article 9 of AIA Document A201–2017.~~Reduction or limitation of retainage, if any, shall be as follows:
(If it is intended, prior to Substantial Completion of the entire Work, to reduce or limit the retainage resulting from the percentages inserted in Sections 5.1.6.1 and 5.1.6.2 above, and this is not explained elsewhere in the Contract Documents, insert here provisions for such reduction or limitation.)

Five percent (5%) retainage shall be held from progress payments. After issuance of a Certificate of Substantial Completion for the Contract Work, retainage may be reduced at the Owner's sole and discretion. When the Owner and Architect agree that the work, including all Punch List items, has been satisfactorily completed, the retainage may be reduced at the Owner's sole option to one percent (1%). Any retainage reduction must be approved by the Architect, Owner and Surety prior to submitting an Application for Payment reflecting such reductions and shall include an executed AIA G707A Consent of Surety to reduction in or Partial Release of Retainage or AIA G707 Consent of Surety to Final Payment.

PAGE 6

§ 5.2.2 The Owner's final payment to the Contractor shall be made no later than ~~30~~ Thirty (30) days after the issuance of the Architect's final Certificate for Payment, or as follows:

The Contractor shall deliver to the Owner:

a. Final Releases of Liens and Waiver of Claims from the Contractor; and

Additions and Deletions Report for AIA Document A101® – 2017. Copyright © 1915, 1918, 1925, 1937, 1951, 1958, 1961, 1963, 1967, 1974, 1977, 1987, 1991, 1997, 2007 and 2017 by The American Institute of Architects. All rights reserved. The "American Institute of Architects," "AIA," the AIA Logo, "A101," and "AIA Contract Documents" are registered trademarks and may not be used without permission. This document was produced by AIA software at 12:24:35 ET on 11/11/2020 under Order No.6115176972 which expires on 09/19/2021, is not for resale, is licensed for one-time use only, and may only be used in accordance with the AIA Contract Documents® Terms of Service. To report copyright violations, e-mail copyright@aia.org.
User Notes: (1383748425)

b. "As-built or Record Drawings" Plans and Specifications showing all changes, locations and installation shall be submitted to the architect for approval and forwarded to the Owner for his approval and acceptance, "As-built or Record Drawings" shall be provided on a drawing set sealed with the Architect's stamp; and

c. Three (3) complete sets of warranties and guarantees in three-ring binders, indexed with a table of contents approved by the Architect; and

d. A statement from the Contractor that there exist no pending or threatened claims against the Owner relating to the Work or for which the Owner may be liable which are unresolved or a statement of any unresolved issues; and

e. All punch list items shall be satisfactorily completed, each punch list item signed and dated indicating when the correction was completed and inspected by the Owner, Architect and Engineer; and

f. The Contractor shall deliver to the Owner attesting that various items of Work have been satisfactory completed in accordance with the requirements of the Contract Documents and in accordance with industry standards of workmanship.

~~**§ 5.3 Interest**~~

~~Payments due and unpaid under the Contract shall bear interest from the date payment is due at the rate stated below, or in the absence thereof, at the legal rate prevailing from time to time at the place where the Project is located.~~
~~*(Insert rate of interest agreed upon, if any.)*~~

~~%~~

PAGE 7

[**X**] Litigation in a court of competent jurisdiction

...

§ 8.2 ~~The Owner's representative:~~
~~(Name, address, email address, and other information)~~Payments due and unpaid under the Contract shall bear interest from the date payment is due at the rate stated below, or in the absence thereof, at the legal rate prevailing from time to time at the place where the Project is located.
(Insert rate of interest agreed upon, if any.)

0.0 % zero percentage

~~**§ 8.3** The Contractor's representative:~~
~~*(Name, address, email address, and other information)*~~

§ 8.23 The Owner's representative:
(Name, address, email address, and other information)

Theresa R. Alban, Ph.D., Superintendent of Schools

§ 8.4 ~~Neither the Owner's nor the Contractor's representative shall be changed without ten days' prior notice to the other party.~~The Contractor's representative:

Additions and Deletions Report for AIA Document A101® – 2017. Copyright © 1915, 1918, 1925, 1937, 1951, 1958, 1961, 1963, 1967, 1974, 1977, 1987, 1991, 1997, 2007 and 2017 by The American Institute of Architects. All rights reserved. The "American Institute of Architects," "AIA," the AIA Logo, "A101," and "AIA Contract Documents" are registered trademarks and may not be used without permission. This document was produced by AIA software at 12:24:35 ET on 11/11/2020 under Order No.6115176972 which expires on 09/19/2021, is not for resale, is licensed for one-time use only, and may only be used in accordance with the AIA Contract Documents® Terms of Service. To report copyright violations, e-mail copyright@aia.org.
User Notes:

(Name, address, email address, and other information)

~~**§ 8.5 Insurance and Bonds**~~

~~**§ 8.5.1** The Owner and the Contractor shall purchase and maintain insurance as set forth in AIA Document A101™–2017, Standard Form of Agreement Between Owner and Contractor where the basis of payment is a Stipulated Sum, Exhibit A, Insurance and Bonds, and elsewhere in the Contract Documents.~~

~~**§ 8.5.2** The Contractor shall provide bonds as set forth in AIA Document A101™–2017 Exhibit A, and elsewhere in the Contract Documents.~~

§ 8.5 Neither the Owner's nor the Contractor's representative shall be changed without ten days' prior notice to the other party.

§ 8.6 ~~Notice in electronic format, pursuant to Article 1 of AIA Document A201–2017, may be given in accordance with AIA Document E203™–2013, Building Information Modeling and Digital Data Exhibit, if completed, or as otherwise set forth below:~~

~~*(If other than in accordance with AIA Document E203–2013, insert requirements for delivering notice in electronic format such as name, title, and email address of the recipient and whether and how the system will be required to generate a read receipt for the transmission.)*~~

Other provisions:

§ 8.6.1 The cost of reproducing copies of any additional Construction Documents required for construction shall be at the sole cost of the Contractor.

§ 8.6.2 The Contractor, Subcontractors and all employees shall conform to all Board of Education policies when on Board of Education property, including but not limited to no smoking and the possession of deadly weapons.

§ 8.6.3 The Contractor shall appoint a safety officer who shall be available to the Owner. On a regular basis such safety officer shall inspect the job site for compliance to OSHA and MOSHA requirements. In the event of any job site violations of OSHA or MOSHA, the Contractor shall immediately rectify the situation and bring the job site into compliance.

§ 8.6.4 The Owner may issue a Notice to Contractor for failure to comply with the Contract requirements and/or the Contract Documents. Contractor must respond to such notice as practical, and Owner must receive a written response within two (2) business days of the Contractor's receipt of such notice. Inspections by Owner or the Owner's failure to issue such Notices shall not relieve the Contractor from full compliance with the Contract Documents.

§ 8.6.5 When Work is to be completed during operation of and use of the building Contractor shall ensure all building systems and egress/ingress remain operable and effective during the hours that the school is in use as determined by the Principal. Dividing walls or partitions shall be erected to separate construction and demolition activities from building activities and egress/ingress shall be maintained as stipulated by the relevant Government authorities, including the Fire Marshal.

§ 8.6.6 The Contractor and its Subcontractors shall staff the project with competent and experienced superintendents, foreman, and journeyman. The Electrical contractor must provide a Master Electrician and the Plumbing contractor must provide a Master Plumber to work on the Project. The number of apprentices working on the Project shall not exceed the ratio of two apprentices for every journeyman. If requested, the Contractor shall, within twenty-four (24) hours, provide documentation outlining specific experience for a journeyman, foreman or superintendent.

Additions and Deletions Report for AIA Document A101® – 2017. Copyright © 1915, 1918, 1925, 1937, 1951, 1958, 1961, 1963, 1967, 1974, 1977, 1987, 1991, 1997, 2007 and 2017 by The American Institute of Architects. All rights reserved. The "American Institute of Architects," "AIA," the AIA Logo, "A101," and "AIA Contract Documents" are registered trademarks and may not be used without permission. This document was produced by AIA software at 12:24:35 ET on 11/11/2020 under Order No.6115176972 which expires on 09/19/2021, is not for resale, is licensed for one-time use only, and may only be used in accordance with the AIA Contract Documents® Terms of Service. To report copyright violations, e-mail copyright@aia.org.
User Notes:

§ 8.6.7 It is Contractor's sole responsibility to provide utilities, including but not limited to electricity, water, telephone, sewer and gas at the job site during the construction period, notwithstanding the indication of any utilities noted as existing in the Contract Documents.

§ 8.6.8 The Contractor shall promptly make available to the Owner complete copies of all executed Subcontracts and any changes, modifications or exclusions thereto, upon the Owner's request.

§ 8.6.9 The Architect or Engineer's approved shop drawings and or samples must be on site before work can begin on the applicable item of Work detailed on the shop drawings or stipulated in the specifications. The Contractor shall make the approved shop drawing available to the Owner's representative as needed to review the installation(s).

§ 8.6.10 All existing areas, interior and exterior, damaged during construction or renovation, are to be refurbished to their original condition.

§ 8.6.11 Any soil or excess excavation, including but not limited to rock, which is not required for the finished Work, shall be removed from the site as part of the Contract Sum.

§ 8.6.12 Notwithstanding any other contract provisions to the contrary, the mechanical system and plumbing system must be completely balances and such balance must be accepted by the Engineer, before the warranty/guarantee period will begin.

§ 8.6.13 The Contractor shall provide not less than a 2 year warranty for the project, the 2 year warranty shall not diminish any extended warranty provided by equipment manufacturer's not limited to and including all HVAC equipment and Compressors.

§ 8.6.14 The Contractor and Subcontractors shall conform to all requirements of the following Maryland General Assembly Policies:

.1 Maryland General Assembly House Bill 642 – Children – Child Care Facilities, Public Schools and Nonpublic Schools – Contractors and Subcontractors.

.2 Maryland General Assembly Senate Bill 508 – Children Care Facilities, Public Schools and Nonpublic Schools – Contractors and Subcontractors.

.3 The Contractor and Subcontractors shall not knowingly hire or retain any individual who has been convicted of a crime involving:

1. An offense under 3-307 of the Criminal Law Article;
2. Child sexual abuse under 3-602 of the Criminal Law Article, or an offense under the laws of another state that would constitute child sexual abuse under 3-602 of the Criminal Law Article if committed in the State; or
3. A crime of violence as defined in 14-101 of the Criminal Law Article, or an offense under the laws of another state that would be a violation of 14-101 of the Criminal Law Article if committed in this State.

§ 8.7 ~~Other provisions:~~Insurance and Bonds

§ 8.7.1 The Owner and the Contractor shall purchase and maintain insurance as set forth in AIA Document A101™–2017, Standard Form of Agreement Between Owner and Contractor where the basis of payment is a Stipulated Sum, Exhibit A, Insurance and Bonds, and elsewhere in the Contract Documents.**§ 8.7** Notice in electronic format, pursuant to Article 1 of AIA Document A201–2017, may be given in accordance with AIA Document E203™–2013, Building Information Modeling and Digital Data Exhibit, if completed, or as otherwise set forth below: *(If other than in accordance with AIA Document E203–2013, insert requirements for delivering notice in electronic format such as name, title, and email address of the recipient and whether and how the system will be required to generate a read receipt for the transmission.)*

§ 8.8 Other provisions:

PAGE 9

Additions and Deletions Report for AIA Document A101® – 2017. Copyright © 1915, 1918, 1925, 1937, 1951, 1958, 1961, 1963, 1967, 1974, 1977, 1987, 1991, 1997, 2007 and 2017 by The American Institute of Architects. All rights reserved. The "American Institute of Architects," "AIA," the AIA Logo, "A101," and "AIA Contract Documents" are registered trademarks and may not be used without permission. This document was produced by AIA software at 12:24:35 ET on 11/11/2020 under Order No.6115176972 which expires on 09/19/2021, is not for resale, is licensed for one-time use only, and may only be used in accordance with the AIA Contract Documents® Terms of Service. To report copyright violations, e-mail copyright@aia.org.
User Notes:

.2 AIA Document ~~A101™–2017, Exhibit A, Insurance and Bonds~~

~~.3 AIA Document~~ A201™–2017, General Conditions of the Contract for Construction

~~.4~~ .3 AIA Document E203™–2013, Building Information Modeling and Digital Data Exhibit, if required, dated as indicated below:

PAGE 10

~~.8 Other Exhibits:~~

~~*(Check all boxes that apply and include appropriate information identifying the exhibit where required.)*~~

~~[ ] AIA Document E204™–2017, Sustainable Projects Exhibit, dated as indicated below:~~
~~*(Insert the date of the E204-2017 incorporated into this Agreement.)*~~

~~_____~~

~~[ ] The Sustainability Plan:~~

~~Title~~	~~Date~~	~~Pages~~

~~[ ] Supplementary and other Conditions of the Contract:~~

~~Document~~	~~Title~~	~~Date~~	~~Pages~~

~~.9 Other documents, if any, listed below:~~ .8 Other documents, if any, listed below:

...

documents should be listed here only if intended to be part of the Contract Documents.)

Frederick County Public Schools Bid Documents for this projects Bid.

ARTICLE 10 INSURANCE AND BONDS

10.1 The Contractor shall purchase and maintain insurance and provide bonds as set forth in Article 11 of AIA Document A201–2017.

(State bonding requirements, if any, and limits of liability for insurance required in Article 11 of AIA Document A201–2017.)

10.2 Maryland Code 21-102 - A certificate of authority, or certified copy of a certificate of authority, issued by the Commissioner to a surety insurer shall be accepted as evidence of qualification to become sole surety on a bond, undertaking, recognizance, or other obligation required or allowed by law, or in the charter, ordinances, rules, or regulations of a municipal corporation, board, organization, court, judge, or public officer, without further proof or qualification regarding solvency, credit, or financial sufficiency to act as a surety or bidders may use bonding companies from Treasury approved sureties with an AM Best rating of A- or better rating.

10.3 The Contractor shall provide a Performance Bond with a Penal Sum equal to the Contract Sum. The Contractor shall provide a Payment Bond with a Penal Sum equal to the Contract Sum. All bonds shall be written on MD COMAR 21 07 02 10 Bond and will be from a surety company acceptable to the Owner.

10.4 The Contractor shall comply with the additional insurance requirements set forth below:

(a) The Board of Education of Frederick County, Frederick County Council, the State of Maryland and the other entities stipulated by the Owner shall be named as an additional insured for ongoing and completed operations on the Contractor policies other than Worker's Compensation.

(b) All policies shall stipulate the Owner is to receive written notice thirty (30) days before cancellation.

Additions and Deletions Report for AIA Document A101® – 2017. Copyright © 1915, 1918, 1925, 1937, 1951, 1958, 1961, 1963, 1967, 1974, 1977, 1987, 1991, 1997, 2007 and 2017 by The American Institute of Architects. All rights reserved. The "American Institute of Architects," "AIA," the AIA Logo, "A101," and "AIA Contract Documents" are registered trademarks and may not be used without permission. This document was produced by AIA software at 12:24:35 ET on 11/11/2020 under Order No.6115176972 which expires on 09/19/2021, is not for resale, is licensed for one-time use only, and may only be used in accordance with the AIA Contract Documents® Terms of Service. To report copyright violations, e-mail copyright@aia.org.
User Notes:

(c) The Owner is to receive insurance certificates evidencing the compliance of insurance requirements at least (10) ten days before Work commences.
(d) All insurance policies shall contain a Waiver of Subrogation in favor of the Owner.
(e) General Liability and Umbrella Insurance policies are to be in "Occurrence Form".
(f) Insurance policies shall provide primary coverage to The Board of Education of Frederick County and The Board of Commissioners of Frederick County and the State of Maryland as additional insureds for loss, injury and damage arising out of or associated with the Work under this agreement as opposed to pro-rate with, concurrent with excess to any other insurance coverages by the Owner other than insurance Worker's Compensation Insurance.
(g) The Contractor shall purchase and maintain all insurance from an insurer acceptable to the Owner and lawfully authorized to do business in Maryland.

10.5 The Owner shall provide and maintain Builder's Risk Protection throughout the project. The Contractor shall pay the cost of any deductible(s) required by the Builders Risk Protection as provided by the Owner. This provision shall not release the contractor of the obligation to complete the work according to plans and specifications required by the contract and shall be obligated to full performance of the contract's undertaking. For projects where Builders Risk coverage is not applicable, the Contractor will insure all tools, equipment, and property to be installed.

10.6 The Contractor shall provide insurance pursuant to the requirements set forth below:

Type of insurance or bond	**Limit of liability or bond amount ($0.00)**
Part 1 Worker's Compensation Insurance	as required by statute
Part 2 Employers Liability:	
Bodily Injury by Accident	$ 500,000.00 each accident
Bodily Injury by Disease	$ 500,000.00 policy limits
Bodily Injury by Disease	$ 500,000.00 each employee
Commercial General Liability Insurance, to include, premises, products, completed operations, personal injury and contractual: Aggregate to apply Per Project./Per Location	$1,000,000.00
Each Occurrence	$1,000,000.00
General aggregate Limit (Per Site)	$2,000,000.00 aggregate limit
Products and complete operation	$1,000,000.00 each occurrence Limit
Personal & advertising injury	$1,000,000.00
Fire damage	$ 50,000.00
Medical Expense (Any One Person)	$ 5,000.00 each occurrence
General Liability insurance shall provide coverage for:	
Completed Operations to meet the Statute of Repose & Statute of Limitations;	
Independent Contractors	
Contractual Liability	
Broad From Property Damage	
Liability arising from Explosion, Collapse and Underground Damage (X, C, U)	
Additional insured Endorsement providing coverage as required in section 10.4 (a)	
Terrorism-Certified & Non Certified	
Option (b1)	
Automobile Liability Insurance, including owned, non-owned and hired vehicles	$1,000,000.00 each person
Bodily injury liability	$1,000,000.00 each occurrence
Property damage liability	
Option (b2)	$1,000,000.00 each accident
Combined single limit Bodily injury or property damage liability	$5,000,000.00 per Occurrence

Additions and Deletions Report for AIA Document A101® – 2017. Copyright © 1915, 1918, 1925, 1937, 1951, 1958, 1961, 1963, 1967, 1974, 1977, 1987, 1991, 1997, 2007 and 2017 by The American Institute of Architects. All rights reserved. The "American Institute of Architects," "AIA," the AIA Logo, "A101," and "AIA Contract Documents" are registered trademarks and may not be used without permission. This document was produced by AIA software at 12:24:35 ET on 11/11/2020 under Order No.6115176972 which expires on 09/19/2021, is not for resale, is licensed for one-time use only, and may only be used in accordance with the AIA Contract Documents® Terms of Service. To report copyright violations, e-mail copyright@aia.org.
User Notes:

Umbrella Excess Liability (true following form)*	$5,000,000.00 General Aggregate $5,000,000.00 Products & Completed Operations
Any construction contractor providing Mass Grading, Masonry, Structural Steel, Superstructure or foundation concrete, Mechanical or Electrical contractors shall be required to carry the following Umbrella Excess Liability (true following form) minimum limits:	$8,000,000.00 Each Occurrence $8,000,000.00 General Aggregate $8,000,000.00 Products & Completed Operations
Contractors Pollution Liability for contractors engaged in testing for, monitoring, clean-up, removal, containing, detoxifying, neutralizing, transporting, handling, storage treatment, or disposing of or processing any waste pollutants.	$1,000,000.00 per Occurrence $1,000,000.00 Aggregate
*CGL & Umbrella limits can vary, but the combined per Occurrence and Aggregate totals must meet or exceed the required occurrence and aggregate limits specified here	

PAGE 12

Theresa R. Alban, Ph.D., Superintendent of Schools _____

Additions and Deletions Report for AIA Document A101® – 2017. Copyright © 1915, 1918, 1925, 1937, 1951, 1958, 1961, 1963, 1967, 1974, 1977, 1987, 1991, 1997, 2007 and 2017 by The American Institute of Architects. All rights reserved. The "American Institute of Architects," "AIA," the AIA Logo, "A101," and "AIA Contract Documents" are registered trademarks and may not be used without permission. This document was produced by AIA software at 12:24:35 ET on 11/11/2020 under Order No.6115176972 which expires on 09/19/2021, is not for resale, is licensed for one-time use only, and may only be used in accordance with the AIA Contract Documents® Terms of Service. To report copyright violations, e-mail copyright@aia.org.
User Notes:

Certification of Document's Authenticity

AIA® Document D401™ – 2003

I, , hereby certify, to the best of my knowledge, information and belief, that I created the attached final document simultaneously with its associated Additions and Deletions Report and this certification at 12:24:35 ET on 11/11/2020 under Order No. 6115176972 from AIA Contract Documents software and that in preparing the attached final document I made no changes to the original text of AIA® Document A101™ – 2017, Standard Form of Agreement Between Owner and Contractor where the basis of payment is a Stipulated Sum, as published by the AIA in its software, other than those additions and deletions shown in the associated Additions and Deletions Report.

_____

(Signed)

_____

(Title)

_____

(Dated)

AIA Document D401™ – 2003. Copyright © 1992 and 2003 by The American Institute of Architects. All rights reserved. The "American Institute of Architects," "AIA," the AIA Logo, and "AIA Contract Documents" are registered trademarks and may not be used without permission. This document was produced by AIA software at 12:24:35 ET on 11/11/2020 under Order No.6115176972 which expires on 09/19/2021, is not for resale, is licensed for one-time use only, and may only be used in accordance with the AIA Contract Documents® Terms of Service. To report copyright violations, e-mail copyright@aia.org.
User Notes: (1383748425)

AIA® Document A201® – 2007

General Conditions of the Contract for Construction

for the following PROJECT:
(Name and location or address)
Lincoln "A" Facility
Roof Replacemennt
250 Madison Street
Frederick, Maryland 21701
FCPS Bid 21C5

THE OWNER:
(Name, legal status and address)
The Board of Education of Frederick County
191 South East Street
Frederick, Maryland 21701-5918

THE ARCHITECT:
(Name, legal status and address)
Bushey Feight Morin Architects
473 North Potomac Street
Hagerstown, Maryland 21740

ADDITIONS AND DELETIONS:
The author of this document has added information needed for its completion. The author may also have revised the text of the original AIA standard form. An *Additions and Deletions Report* that notes added information as well as revisions to the standard form text is available from the author and should be reviewed. A vertical line in the left margin of this document indicates where the author has added necessary information and where the author has added to or deleted from the original AIA text.

This document has important legal consequences. Consultation with an attorney is encouraged with respect to its completion or modification.

TABLE OF ARTICLES

1 GENERAL PROVISIONS

2 OWNER

3 CONTRACTOR

4 ARCHITECT

5 SUBCONTRACTORS

6 CONSTRUCTION BY OWNER OR BY SEPARATE CONTRACTORS

7 CHANGES IN THE WORK

8 TIME

9 PAYMENTS AND COMPLETION

10 PROTECTION OF PERSONS AND PROPERTY

11 INSURANCE AND BONDS

12 UNCOVERING AND CORRECTION OF WORK

13 MISCELLANEOUS PROVISIONS

Init.
/

AIA Document A201® – 2007. Copyright © 1911, 1915, 1918, 1925, 1937, 1951, 1958, 1961, 1963, 1966, 1970, 1976, 1987, 1997 and 2007 by The American Institute of Architects. All rights reserved. The "American Institute of Architects," "AIA," the AIA Logo, "A201," and "AIA Contract Documents" are registered trademarks and may not be used without permission. This document was produced by AIA software at 12:23:28 ET on 11/11/2020 under Order No.6115176972 which expires on 09/19/2021, is not for resale, is licensed for one-time use only, and may only be used in accordance with the AIA Contract Documents® Terms of Service. To report copyright violations, e-mail copyright@aia.org.
User Notes:
(1517250872)

14 TERMINATION OR SUSPENSION OF THE CONTRACT

15 CLAIMS AND DISPUTES

Init.
/

AIA Document A201® – 2007. Copyright © 1911, 1915, 1918, 1925, 1937, 1951, 1958, 1961, 1963, 1966, 1970, 1976, 1987, 1997 and 2007 by The American Institute of Architects. All rights reserved. The "American Institute of Architects," "AIA," the AIA Logo, "A201," and "AIA Contract Documents" are registered trademarks and may not be used without permission. This document was produced by AIA software at 12:23:28 ET on 11/11/2020 under Order No.6115176972 which expires on 09/19/2021, is not for resale, is licensed for one-time use only, and may only be used in accordance with the AIA Contract Documents® Terms of Service. To report copyright violations, e-mail copyright@aia.org.
User Notes:
(1517250872)

INDEX
(Topics and numbers in bold are section headings.)

Acceptance of Nonconforming Work
9.6.6, 9.9.3, **12.3**
Acceptance of Work
9.6.6, 9.8.2, 9.9.3, 9.10.1, 9.10.3, 12.3
Access to Work
3.16, 6.2.1, 12.1
Accident Prevention
10
Acts and Omissions
3.2, 3.3.2, 3.12.8, 3.18, 4.2.3, 8.3.1, 9.5.1, 10.2.5, 10.2.8, 13.4.2, 13.7, 14.1, 15.2
Addenda
1.1.1, 3.11
Additional Costs, Claims for
3.7.4, 3.7.5, 6.1.1, 7.3.7.5, 10.3, 15.1.4
Additional Inspections and Testing
9.4.2, 9.8.3, 12.2.1, **13.5**
Additional Insured
11.1.4
Additional Time, Claims for
3.2.4, 3.7.4, 3.7.5, 3.10.2, 8.3.2, **15.1.5**
Administration of the Contract
3.1.3, **4.2**, 9.4, 9.5
Advertisement or Invitation to Bid
1.1.1
Aesthetic Effect
4.2.13
Allowances
3.8, 7.3.8
All-risk Insurance
11.3.1, 11.3.1.1
Applications for Payment
4.2.5, 7.3.9, 9.2, **9.3**, 9.4, 9.5.1, 9.6.3, 9.7, 9.10, 11.1.3
Approvals
2.1.1, 2.2.2, 2.4, 3.1.3, 3.10.2, 3.12.8, 3.12.9, 3.12.10, 4.2.7, 9.3.2, 13.5.1
Arbitration
8.3.1, 11.3.10, 13.1, 15.3.2, **15.4**
ARCHITECT
4
Architect, Definition of
4.1.1
Architect, Extent of Authority
2.4, 3.12.7, 4.1, 4.2, 5.2, 6.3, 7.1.2, 7.3.7, 7.4, 9.2, 9.3.1, 9.4, 9.5, 9.6.3, 9.8, 9.10.1, 9.10.3, 12.1, 12.2.1, 13.5.1, 13.5.2, 14.2.2, 14.2.4, 15.1.3, 15.2.1
Architect, Limitations of Authority and Responsibility
2.1.1, 3.12.4, 3.12.8, 3.12.10, 4.1.2, 4.2.1, 4.2.2, 4.2.3, 4.2.6, 4.2.7, 4.2.10, 4.2.12, 4.2.13, 5.2.1, 7.4, 9.4.2, 9.5.3, 9.6.4, 15.1.3, 15.2
Architect's Additional Services and Expenses
2.4, 11.3.1.1, 12.2.1, 13.5.2, 13.5.3, 14.2.4
Architect's Administration of the Contract
3.1.3, 4.2, 3.7.4, 15.2, 9.4.1, 9.5
Architect's Approvals
2.4. 3.1.3, 3.5, 3.10.2, 4.2.7
Architect's Authority to Reject Work
3.5, 4.2.6, 12.1.2, 12.2.1
Architect's Copyright
1.1.7, 1.5
Architect's Decisions
3.7.4, 4.2.6, 4.2.7, 4.2.11, 4.2.12, 4.2.13, 4.2.14, 6.3, 7.3.7, 7.3.9, 8.1.3, 8.3.1, 9.2, 9.4.1, 9.5, 9.8.4, 9.9.1, 13.5.2, 15.2, 15.3
Architect's Inspections
3.7.4, 4.2.2, 4.2.9, 9.4.2, 9.8.3, 9.9.2, 9.10.1, 13.5
Architect's Instructions
3.2.4, 3.3.1, 4.2.6, 4.2.7, 13.5.2
Architect's Interpretations
4.2.11, 4.2.12
Architect's Project Representative
4.2.10
Architect's Relationship with Contractor
1.1.2, 1.5, 3.1.3, 3.2.2, 3.2.3, 3.2.4, 3.3.1, 3.4.2, 3.5, 3.7.4, 3.7.5, 3.9.2, 3.9.3, 3.10, 3.11, 3.12, 3.16, 3.18, 4.1.2, 4.1.3, 4.2, 5.2, 6.2.2, 7, 8.3.1, 9.2, 9.3, 9.4, 9.5, 9.7, 9.8, 9.9, 10.2.6, 10.3, 11.3.7, 12, 13.4.2, 13.5, 15.2
Architect's Relationship with Subcontractors
1.1.2, 4.2.3, 4.2.4, 4.2.6, 9.6.3, 9.6.4, 11.3.7
Architect's Representations
9.4.2, 9.5.1, 9.10.1
Architect's Site Visits
3.7.4, 4.2.2, 4.2.9, 9.4.2, 9.5.1, 9.9.2, 9.10.1, 13.5
Asbestos
10.3.1
Attorneys' Fees
3.18.1, 9.10.2, 10.3.3
Award of Separate Contracts
6.1.1, 6.1.2
Award of Subcontracts and Other Contracts for Portions of the Work
5.2
Basic Definitions
1.1
Bidding Requirements
1.1.1, 5.2.1, 11.4.1
Binding Dispute Resolution
9.7, 11.3.9, 11.3.10, 13.1, 15.2.5, 15.2.6.1, 15.3.1, 15.3.2
Boiler and Machinery Insurance
11.3.2
Bonds, Lien
7.3.7.4, 9.10.2, 9.10.3
Bonds, Performance, and Payment
7.3.7.4, 9.6.7, 9.10.3, 11.3.9, **11.4**
Building Permit
3.7.1

AIA Document A201® – 2007. Copyright © 1911, 1915, 1918, 1925, 1937, 1951, 1958, 1961, 1963, 1966, 1970, 1976, 1987, 1997 and 2007 by The American Institute of Architects. All rights reserved. The "American Institute of Architects," "AIA," the AIA Logo, "A201," and "AIA Contract Documents" are registered trademarks and may not be used without permission. This document was produced by AIA software at 12:23:28 ET on 11/11/2020 under Order No.6115176972 which expires on 09/19/2021, is not for resale, is licensed for one-time use only, and may only be used in accordance with the AIA Contract Documents® Terms of Service. To report copyright violations, e-mail copyright@aia.org.
User Notes:
(1517250872)

Capitalization
1.3
Certificate of Substantial Completion
9.8.3, 9.8.4, 9.8.5
Certificates for Payment
4.2.1, 4.2.5, 4.2.9, 9.3.3, **9.4**, 9.5, 9.6.1, 9.6.6, 9.7, 9.10.1, 9.10.3, 14.1.1.3, 14.2.4, 15.1.3
Certificates of Inspection, Testing or Approval
13.5.4
Certificates of Insurance
9.10.2, 11.1.3
Change Orders
1.1.1, 2.4, 3.4.2, 3.7.4, 3.8.2.3, 3.11, 3.12.8, 4.2.8, 5.2.3, 7.1.2, 7.1.3, **7.2**, 7.3.2, 7.3.6, 7.3.9, 7.3.10, 8.3.1, 9.3.1.1, 9.10.3, 10.3.2, 11.3.1.2, 11.3.4, 11.3.9, 12.1.2, 15.1.3
Change Orders, Definition of
7.2.1
CHANGES IN THE WORK
2.2.1, 3.11, 4.2.8, **7**, 7.2.1, 7.2.1.A, 7.2.1.B, 7..2.1.C, 7.2.1.D, 7.2.1.E, 7.2.1.F, 7.2.1.G, 7.3.1, 7.4, 8.3.1, 9.3.1.1, 11.3.9
Claims, Definition of
15.1.1
CLAIMS AND DISPUTES
3.2.4, 6.1.1, 6.3, 7.3.9, 9.3.3, 9.10.4, 9.5.4, 9.5.5, 10.3.3, **15**
Claims and Timely Assertion of Claims
13.7
Claims for Additional Cost
3.2.4, 3.7.4, 6.1.1, 7.3.9, 10.3.2, **15.1.4**
Claims for Additional Time
3.2.4, 3.7.46.1.1, 8.3.2, 10.3.2, **15.1.5**
Concealed or Unknown Conditions, Claims for
3.7.4
Claims for Damages
3.2.4, 3.18, 6.1.1, 8.3.3, 9.5.1, 9.6.7, 10.3.3, 11.1.1, 11.3.5, 11.3.7, 14.1.3, 14.2.4, 15.1.6

(Paragraph deleted)
Cleaning Up
3.15, 6.3
Commencement of the Work, Conditions Relating to
2.2.1, 3.2.2, 3.4.1, 3.7.1, 3.10.1, 3.12.6, 5.2.1, 5.2.3, 6.2.2, 8.1.2, 8.2.2, 8.3.1, 11.1, 11.3.1, 11.3.6, 11.4.1, 15.1.4
Commencement of the Work, Definition of
8.1.2
Communications Facilitating Contract Administration
3.9.1, **4.2.4**
Completion, Conditions Relating to
3.4.1, 3.11, 3.15, 4.2.2, 4.2.9, 8.2, 9.4.2, 9.8, 9.9.1, 9.10, 12.2, 13.7, 14.1.2
COMPLETION, PAYMENTS AND
9
Completion, Substantial
4.2.9, 8.1.1, 8.1.3, 8.2.3, 9.4.2, 9.8, 9.9.1, 9.10.3, 12.2, 13.7
Compliance with Laws
1.6, 3.2.3, 3.6, 3.7, 3.12.10, 3.13, 4.1.1, 9.6.4, 10.2.2, 11.1, 11.3, 13.1, 13.4, 13.5.1, 13.5.2, 13.6, 14.1.1, 14.2.1.3, 15. 2.8
Concealed or Unknown Conditions
3.7.4, 4.2.8, 8.3.1, 10.3
Conditions of the Contract
1.1.1, 6.1.1, 6.1.4
Consent, Written
3.4.2, 3.7.4, 3.12.8, 3.14.2, 4.1.2, 9.3.2, 9.8.5, 9.9.1, 9.10.2, 9.10.3, 11.3.1, 13.2
-
-
CONSTRUCTION BY OWNER OR BY SEPARATE CONTRACTORS
1.1.4, **6**
Construction Change Directive, Definition of
7.3.1
Construction Change Directives
1.1.1, 3.4.2, 3.12.8, 4.2.8, 7.1.1, 7.1.2, 7.1.3, **7.3**, 9.3.1.1
Construction Schedules, Contractor's
3.10, 3.12.1, 3.12.2, 6.1.3, 15.1.5.2
Contingent Assignment of Subcontracts
5.4, 14.2.2.2
Continuing Contract Performance
15.1.3
Contract, Definition of
1.1.2
CONTRACT, TERMINATION OR SUSPENSION OF THE
5.4.1.1, 11.3.9, **14**
Contract Administration
3.1.3, 4, 9.4, 9.5
Contract Award and Execution, Conditions Relating to
3.7.1, 3.10, 5.2, 6.1, 11.1.3, 11.3.6, 11.4.1
Contract Documents, Copies Furnished and Use of
1.5.2, 2.2.5, 5.3
Contract Documents, Definition of
1.1.1
Contract Sum
3.7.4, 3.8, 5.2.3, 7.2, 7.3, 7.4, **9.1**, 9.4.2, 9.5.1.4, 9.6.7, 9.7, 10.3.2, 11.3.1, 14.2.4, 14.3.2, 15.1.4, 15.2.5
Contract Sum, Definition of
9.1
Contract Time
3.7.4, 3.7.5, 3.10.2, 5.2.3, 7.2.1.3, 7.3.1, 7.3.5, 7.4, 8.1.1, 8.2.1, 8.3.1, 9.5.1, 9.7, 10.3.2, 12.1.1, 14.3.2, 15.1.5.1, 15.2.5
Contract Time, Definition of
8.1.1
CONTRACTOR
3

AIA Document A201® – 2007. Copyright © 1911, 1915, 1918, 1925, 1937, 1951, 1958, 1961, 1963, 1966, 1970, 1976, 1987, 1997 and 2007 by The American Institute of Architects. All rights reserved. The "American Institute of Architects," "AIA," the AIA Logo, "A201," and "AIA Contract Documents" are registered trademarks and may not be used without permission. This document was produced by AIA software at 12:23:28 ET on 11/11/2020 under Order No.6115176972 which expires on 09/19/2021, is not for resale, is licensed for one-time use only, and may only be used in accordance with the AIA Contract Documents® Terms of Service. To report copyright violations, e-mail copyright@aia.org.
User Notes:
(1517250872)

Contractor, Definition of
3.1, 6.1.2
Contractor's Construction Schedules
3.10, 3.12.1, 3.12.2, 6.1.3, 15.1.5.2
Contractor's Employees
3.3.2, 3.4.3, 3.8.1, 3.9, 3.18.2, 4.2.3, 4.2.6, 10.2, 10.3, 11.1.1, 11.3.7, 14.1, 14.2.1.1
Contractor's Liability Insurance
11.1
Contractor's Relationship with Separate Contractors and Owner's Forces
3.12.5, 3.14.2, 4.2.4, 6, 11.3.7, 12.1.2, 12.2.4
Contractor's Relationship with Subcontractors
1.2.2, 3.3.2, 3.18.1, 3.18.2, 5, 9.6.2, 9.6.7, 9.10.2, 11.3.1.2, 11.3.7, 11.3.8
Contractor's Relationship with the Architect
1.1.2, 1.5, 3.1.3, 3.2.2, 3.2.3, 3.2.4, 3.3.1, 3.4.2, 3.5, 3.7.4, 3.10, 3.11, 3.12, 3.16, 3.18, 4.1.3, 4.2, 5.2, 6.2.2, 7, 8.3.1, 9.2, 9.3, 9.4, 9.5, 9.7, 9.8, 9.9, 10.2.6, 10.3, 11.3.7, 12, 13.5, 15.1.2, 15.2.1
Contractor's Representations
3.2.1, 3.2.2, 3.5, 3.12.6, 6.2.2, 8.2.1, 9.3.3, 9.8.2
Contractor's Responsibility for Those Performing the Work
3.3.2, 3.18, 3.4.4, 5.3, 6.1.3, 6.2, 9.5.1, 10.2.8
Contractor's Review of Contract Documents
3.2
Contractor's Right to Stop the Work
9.7
Contractor's Right to Terminate the Contract
14.1, 15.1.6
Contractor's Submittals
3.10, 3.11, 3.12.4, 4.2.7, 5.2.1, 5.2.3, 9.2, 9.3, 9.8.2, 9.8.3, 9.9.1, 9.10.2, 9.10.3, 11.1.3, 11.4.2
Contractor's Superintendent
3.9, 10.2.6
Contractor's Supervision and Construction Procedures
1.2.2, 3.3, 3.4, 3.12.10, 4.2.2, 4.2.7, 6.1.3, 6.2.4, 7.1.3, 7.3.5, 7.3.7, 8.2, 10, 12, 14, 15.1.3
Contractual Liability Insurance
11.1.1.8, 11.2
Coordination and Correlation
1.2, 3.2.1, 3.3.1, 3.10, 3.12.6, 6.1.3, 6.2.1
Copies Furnished of Drawings and Specifications
1.5, 2.2.5, 3.11
Copyrights
1.5, **3.17**
Correction of Work
2.3, 2.4, 3.7.3, 9.4.2, 9.8.2, 9.8.3, 9.9.1, 12.1.2, **12.2**
Correlation and Intent of the Contract Documents
1.2
Cost, Definition of
7.3.7
Costs
2.4, 3.2.4, 3.7.3, 3.8.2, 3.15.2, 5.4.2, 6.1.1, 6.2.3, 7.3.3.3, 7.3.7, 7.3.8, 7.3.9, 9.10.2, 10.3.2, 10.3.6, 11.3, 12.1.2, 12.2.1, 12.2.4, 13.5, 14
Cutting and Patching
3.14, 6.2.5
Damage to Construction of Owner or Separate Contractors
3.14.2, 6.2.4, 10.2.1.2, 10.2.5, 10.4, 11.1.1, 11.3, 12.2.4
Damage to the Work
3.14.2, 9.9.1, 10.2.1.2, 10.2.5, 10.4, 11.3.1, 12.2.4
Damages, Claims for
3.2.4, 3.18, 6.1.1, 8.3.3, 9.5.1, 9.6.7, 10.3.3, 11.1.1, 11.3.5, 11.3.7, 14.1.3, 14.2.4, 15.1.6
Damages for Delay
6.1.1, 8.3.3, 9.5.1.6, 9.7, 10.3.2
Date of Commencement of the Work, Definition of
8.1.2
Date of Substantial Completion, Definition of
8.1.3
Day, Definition of
8.1.4
Decisions of the Architect
3.7.4, 4.2.6, 4.2.7, 4.2.11, 4.2.12, 4.2.13, 15.2, 6.3, 7.3.7, 7.3.9, 8.1.3, 8.3.1, 9.2, 9.4, 9.5.1, 9.8.4, 9.9.1, 13.5.2, 14.2.2, 14.2.4, 15.1, 15.2
Decisions to Withhold Certification
9.4.1, **9.5**, 9.7, 14.1.1.3
Defective or Nonconforming Work, Acceptance, Rejection and Correction of
2.3, 2.4, 3.5, 4.2.6, 6.2.5, 9.5.1, 9.5.2, 9.6.6, 9.8.2, 9.9.3, 9.10.4, 9.10.6, 12.2.1
Definitions
1.1, 2.1.1, 3.1.1, 3.5, 3.12.1, 3.12.2, 3.12.3, 4.1.1, 15.1.1, 5.1, 6.1.2, 7.2.1, 7.3.1, 8.1, 9.1, 9.8.1
Delays and Extensions of Time
3.2, 3.7.4, 5.2.3, 7.2.1, 7.3.1, 7.4, **8.3**, 9.5.1, 9.7, 10.3.2, 10.4 14.3.2, 15.1.5, 15.2.5
Disputes
6.3, 7.3.9, 9.5.4, 9.5.5, 15.1, 15.2
Documents and Samples at the Site
3.11
Drawings, Definition of
1.1.5
Drawings and Specifications, Use and Ownership of
3.11
Effective Date of Insurance
8.2.2, 11.1.2
Emergencies
10.4, 14.1.1.2, 15.1.4
Employees, Contractor's
3.3.2, 3.4.3, 3.8.1, 3.9, 3.18.2, 4.2.3, 4.2.6, 10.2, 10.3.3, 11.1.1, 11.3.7, 14.1, 14.2.1.1

AIA Document A201® – 2007. Copyright © 1911, 1915, 1918, 1925, 1937, 1951, 1958, 1961, 1963, 1966, 1970, 1976, 1987, 1997 and 2007 by The American Institute of Architects. All rights reserved. The "American Institute of Architects," "AIA," the AIA Logo, "A201," and "AIA Contract Documents" are registered trademarks and may not be used without permission. This document was produced by AIA software at 12:23:28 ET on 11/11/2020 under Order No.6115176972 which expires on 09/19/2021, is not for resale, is licensed for one-time use only, and may only be used in accordance with the AIA Contract Documents® Terms of Service. To report copyright violations, e-mail copyright@aia.org.
User Notes: (1517250872)

Equal Opportunity 13.8
Equipment, Labor, Materials or
1.1.3, 1.1.6, 3.4, 3.5, 3.8.2, 3.8.3, 3.12, 3.13, 3.15.1, 4.2.6, 4.2.7, 5.2.1, 6.2.1, 7.3.7, 9.3.2, 9.3.3, 9.5.1.3, 9.10.2, 10.2.1, 10.2.4, 14.2.1.1, 14.2.1.2
Execution and Progress of the Work
1.1.3, 1.2.1, 1.2.2, 2.2.3, 2.2.5, 3.1, 3.3.1, 3.4.1, 3.5, 3.7.1, 3.10.1, 3.12, 3.14, 4.2, 6.2.2, 7.1.3, 7.3.5, 8.2, 9.5.1, 9.9.1, 10.2, 10.3, 12.2, 14.2, 14.3.1, 15.1.3
Extensions of Time
3.2.4, 3.7.4, 5.2.3, 7.2.1, 7.3, 7.4, 9.5.1, 9.7, 10.3.2, 10.4, 14.3, 15.1.5, 15.2.5
Failure of Payment
9.5.1.3, **9.7**, 9.10.2, 13.6, 14.1.1.3, 14.2.1.2
Faulty Work
(See Defective or Nonconforming Work)
Final Completion and Final Payment
4.2.1, 4.2.9, 9.8.2, **9.10**, 11.1.2, 11.1.3, 11.3.1, 11.3.5, 12.3, 14.2.4, 14.4.3
(Paragraphs deleted)
Fire and Extended Coverage Insurance
11.3.1.1
GENERAL PROVISIONS
1
Governing Law
13.1
Guarantees (See Warranty)
Hazardous Materials
10.2.4, 10.2.4.1, **10.3**
Identification of Subcontractors and Suppliers
5.2.1
Indemnification
3.17, **3.18**, 9.10.2, 10.3.3, 10.3.5, 10.3.6, 11.3.1.2, 11.3.7
Information and Services Required of the Owner
2.1.2, **2.2**, 3.2.2, 3.12.4, 3.12.10, 6.1.3, 6.1.4, 6.2.5, 9.6.1, 9.6.4, 9.9.2, 9.10.3, 10.3.3, 11.2, 11.4, 13.5.1, 13.5.2, 15.1.3
Initial Decision
15.2
Initial Decision Maker, Definition of
1.1.8
Initial Decision Maker, Decisions
14.2.2, 14.2.4, 15.2.1, 15.2.2, 15.2.3, 15.2.4, 15.2.5
Initial Decision Maker, Extent of Authority
14.2.2, 14.2.4, 15.1.3, 15.2.1, 15.2.2, 15.2.3, 15.2.4, 15.2.5
Injury or Damage to Person or Property
10.2.8, 10.4
Inspections
3.1.3, 3.3.3, 3.7.1, 4.2.2, 4.2.6, 4.2.9, 9.4.2, 9.8.3, 9.9.2, 9.10.1, 12.2.1, 13.5
Instructions to Bidders
1.1.1
Instructions to the Contractor
3.2.4, 3.3.1, 3.8.1, 5.2.1, 7, 8.2.2, 12, 13.5.2
Instruments of Service, Definition of
1.1.7, 1.5.1, 1.5.2
Insurance
3.18.1, 6.1.1, 7.3.7, 9.3.2, 9.8.4, 9.9.1, 9.10.2, **11**
Insurance, Boiler and Machinery
11.3.2
Insurance, Contractor's Liability
11.1
Insurance, Effective Date of
8.2.2, 11.1.2
Insurance, Loss of Use
11.3.3
Insurance, Owner's Liability
11.2
Insurance, Property
10.2.5, **11.3**
Insurance, Stored Materials
9.3.2
INSURANCE AND BONDS
11
Insurance Companies, Consent to Partial Occupancy
9.9.1
Intent of the Contract Documents
1.2.1, 4.2.7, 4.2.12, 4.2.13, 7.4
Interest
13.6
Interpretation
1.2.3, **1.4**, 4.1.1, 5.1, 6.1.2, 15.1.1
Interpretations, Written
4.2.11, 4.2.12, 15.1.4
(Paragraph deleted)
Labor and Materials, Equipment
1.1.3, 1.1.6, **3.4**, 3.5, 3.8.2, 3.8.3, 3.12, 3.13, 3.15.1, 4.2.6, 4.2.7, 5.2.1, 6.2.1, 7.3.7, 9.3.2, 9.3.3, 9.5.1.3, 9.10.2, 10.2.1, 10.2.4, 14.2.1.1, 14.2.1.2
Labor Disputes
8.3.1
Laws and Regulations
1.5, 3.2.3, 3.6, 3.7, 3.12.10, 3.13, 4.1.1, 9.6.4, 9.9.1, 10.2.2, 11.1.1, 11.3, 13.4, 13.5.1, 13.5.2, 13.6, 14, 15.2.8
Liens
2.1.2, 9.3.3, 9.10.2, 9.10.4, 15.2.8
Limitations, Statutes of
12.2.5, 13.7
Limitations of Liability
2.3.1, 3.2.2, 3.5, 3.12.10, 3.17, 3.18.1, 4.2.6, 4.2.7, 4.2.12, 6.2.2, 9.4.2, 9.6.4, 9.6.7, 10.2.5, 10.3.3, 11.1.2, 11.2, 11.3.7, 12.2.5, 13.4.2
Limitations of Time
2.1.2, 2.2, 2.4, 3.2.2, 3.10, 3.11, 3.12.5, 3.15.1, 4.2.7, 5.2, 5.3, 5.3.1, 5.4.1, 6.2.4, 7.3, 7.4, 8.2, 9.2, 9.3.1, 9.3.3, 9.4.1, 9.5, 9.6, 9.7, 9.8, 9.9, 9.10, 11.1.3, 11.3.1.5, 11.3.6, 11.3.10, 12.2, 13.5, 13.7, 14, 15
Loss of Use Insurance
11.3.3

AIA Document A201® – 2007. Copyright © 1911, 1915, 1918, 1925, 1937, 1951, 1958, 1961, 1963, 1966, 1970, 1976, 1987, 1997 and 2007 by The American Institute of Architects. All rights reserved. The "American Institute of Architects," "AIA," the AIA Logo, "A201," and "AIA Contract Documents" are registered trademarks and may not be used without permission. This document was produced by AIA software at 12:23:28 ET on 11/11/2020 under Order No.6115176972 which expires on 09/19/2021, is not for resale, is licensed for one-time use only, and may only be used in accordance with the AIA Contract Documents® Terms of Service. To report copyright violations, e-mail copyright@aia.org.
User Notes:
(1517250872)

Material Suppliers
1.5, 3.12.1, 4.2.4, 4.2.6, 5.2.1, 9.3, 9.4.2, 9.6, 9.10.5
Materials, Hazardous
10.2.4, **10.3**
Materials, Labor, Equipment and
1.1.3, 1.1.6, 1.5.1, 3.4.1, 3.5, 3.8.2, 3.8.3, 3.12, 3.13, 3.15.1, 4.2.6, 4.2.7, 5.2.1, 6.2.1, 7.3.7, 9.3.2, 9.3.3, 9.5.1.3, 9.10.2, 10.2.1.2, 10.2.4, 14.2.1.1, 14.2.1.2
Means, Methods, Techniques, Sequences and Procedures of Construction
3.3.1, 3.12.10, 4.2.2, 4.2.7, 9.4.2
Mechanic's Lien
2.1.2, 15.2.8
Mediation
8.3.1, 10.3.5, 10.3.6, 15.2.1, 15.2.5, 15.2.6, **15.3**
Minor Changes in the Work
1.1.1, 3.12.8, 4.2.8, 7.1, **7.4**
MISCELLANEOUS PROVISIONS
13
Modifications, Definition of
1.1.1
Modifications to the Contract
1.1.1, 1.1.2, 3.11, 4.1.2, 4.2.1, 5.2.3, 7, 8.3.1, 9.7, 10.3.2, 11.3.1
Mutual Responsibility
6.2
Nonconforming Work, Acceptance of
9.6.6, 9.9.3, **12.3**
Nonconforming Work, Rejection and Correction of
2.3, 2.4, 3.5, 4.2.6, 6.2.4, 9.5.1, 9.8.2, 9.9.3, 9.10.4, 12.2.1
Notice
2.2.1, 2.3.1, 2.4.1, 3.2.4, 3.3.1, 3.7.2, 3.12.9, 5.2.1, 9.7, 9.10, 10.2.2, 11.1.3, 12.2.2.1, 13.3, 13.5.1, 13.5.2, 14.1, 14.2, 15.2.8
Notice, Written
2.3, 2.4, 3.3.1, 3.9.2, 3.12.9, 3.12.10, 5.2.1, 9.7, 9.10, 10.2.2, 10.3, 11.1.3, 11.3.6, 12.2.2.1, **13.3**, 14, 15.2.8
Notice of Claims
3.7.4, 10.2.8, **15.1.2**
Notice of Testing and Inspections
13.5.1, 13.5.2
Observations, Contractor's
3.2, 3.7.4
Occupancy
2.2.2, 9.6.6, 9.8, 11.3.1.5
Orders, Written
1.1.1, 2.3, 3.9.2, 7, 8.2.2, 11.3.9, 12.1, 12.2.2.1, 13.5.2, 14.3.1
OWNER
2
Owner, Definition of
2.1.1
Owner, Information and Services Required of the
2.1.2, **2.2**, 3.2.2, 3.12.10, 6.1.3, 6.1.4, 6.2.5, 9.3.2, 9.6.1, 9.6.4, 9.9.2, 9.10.3, 10.3.3, 11.2, 11.3, 13.5.1, 13.5.2, 15.1.3
Owner's Authority
1.5, 2.1.1, 2.3, 2.4, 3.4.2, 3.8.1, 3.12.10, 3.14.2, 4.1.2, 4.1.3, 4.2.4, 4.2.9, 5.2.1, 5.2.4, 5.4.1, 6.1, 6.3, 7.2.1, 7.3.1, 8.2.2, 8.3.1, 9.3.1, 9.3.2, 9.5.1, 9.6.4, 9.9.1, 9.10.2, 10.3.2, 11.1.3, 11.3.3, 11.3.10, 12.2.2, 12.3, 14.3, 14.4, 15.2.7
Owner's Financial Capability
2.2.1, 14.1.1.4
Owner's Liability Insurance
11.2
Owner's Relationship with Subcontractors
1.1.2, 5.2, 5.3, 5.4, 9.6.4, 9.10.2, 14.2.2
Owner's Right to Carry Out the Work
2.4, 14.2.2
Owner's Right to Clean Up
6.3
Owner's Right to Perform Construction and to Award Separate Contracts
6.1
Owner's Right to Stop the Work
2.3
Owner's Right to Suspend the Work
14.3
Owner's Right to Terminate the Contract
14.2
Ownership and Use of Drawings, Specifications and Other Instruments of Service
1.1.1, 1.1.6, 1.1.7, **1.5**, 2.2.5, 3.2.2, 3.11, 3.17, 4.2.12, 5,3, 5.3.1
Partial Occupancy or Use
9.6.6, **9.9**, 11.3.1.5
Patching, Cutting and
3.14, 6.2.5
Patents
3.17
Payment, Applications for
4.2.5, 7.3.9, 9.2, **9.3**, 9.4, 9.5, 9.6.3, 9.7, 9.8.5, 9.10.1, 14.2.3, 14.2.4, 14.4.3
Payment, Certificates for
4.2.5, 4.2.9, 9.3.3, **9.4**, 9.5, 9.6.1, 9.6.6, 9.7, 9.10.1, 9.10.3, 13.7, 14.1.1.3, 14.2.4
Payment, Failure of
9.5.1.3, **9.7**, 9.10.2, 13.6, 14.1.1.3, 14.2.1.2
Payment, Final
4.2.1, 4.2.9, 9.8.2, 9.10, 11.1.2, 11.1.3, 11.4.1, 12.3, 13.7, 14.2.4, 14.4.3
Payment Bond, Performance Bond and
7.3.7.4, 9.6.7, 9.10.3, **11.4**
Payments, Progress
9.3, **9.6**, 9.8.5, 9.10.3, 13.6, 14.2.3, 15.1.3
PAYMENTS AND COMPLETION
9
Payments to Subcontractors
5.4.2, 9.5.1.3, 9.6.2, 9.6.3, 9.6.4, 9.6.7, 14.2.1.2
PCB
10.3.1

AIA Document A201® – 2007. Copyright © 1911, 1915, 1918, 1925, 1937, 1951, 1958, 1961, 1963, 1966, 1970, 1976, 1987, 1997 and 2007 by The American Institute of Architects. All rights reserved. The "American Institute of Architects," "AIA," the AIA Logo, "A201," and "AIA Contract Documents" are registered trademarks and may not be used without permission. This document was produced by AIA software at 12:23:28 ET on 11/11/2020 under Order No.6115176972 which expires on 09/19/2021, is not for resale, is licensed for one-time use only, and may only be used in accordance with the AIA Contract Documents® Terms of Service. To report copyright violations, e-mail copyright@aia.org.
User Notes:
(1517250872)

Performance Bond and Payment Bond
7.3.7.4, 9.6.7, 9.10.3, **11.4**
Permits, Fees, Notices and Compliance with Laws
2.2.2, **3.7**, 3.13, 7.3.7.4, 10.2.2
PERSONS AND PROPERTY, PROTECTION OF
10
Polychlorinated Biphenyl
10.3.1
Product Data, Definition of
3.12.2
Product Data and Samples, Shop Drawings
3.11, **3.12**, 4.2.7
Progress and Completion
4.2.2, **8.2**, 9.8, 9.9.1, 15.1.3
Progress Payments
9.3, **9.6**, 9.8.5, 9.10.3, 13.6, 14.2.3, 15.1.3
Project, Definition of
1.1.4
Project Representatives
4.2.10
Property Insurance
10.2.5, **11.3**
PROTECTION OF PERSONS AND PROPERTY
10
Regulations and Laws
1.5, 3.2.3, 3.6, 3.7, 3.12.10, 3.13, 4.1.1, 9.6.4, 9.9.1, 10.2.2, 11.1, 11.4, 13.1, 13.4, 13.5.1, 13.5.2, 13.6, 14, 15.2.8
Rejection of Work
3.5, 4.2.6, 12.2.1
Releases and Waivers of Liens
9.10.2
Representations
3.2.1, 3.5, 3.12.6, 6.2.2, 8.2.1, 9.3.3, 9.4.2, 9.5.1, 9.8.2, 9.10.1
Representatives
2.1.1, 3.1.1, 3.9, 4.1.1, 4.2.1, 4.2.2, 4.2.10, 5.1.1, 5.1.2, 13.2.1
Responsibility for Those Performing the Work
3.3.2, 3.18, 4.2.3, 5.3.1, 6.1.3, 6.2, 6.3, 9.5.1, 10
Retainage
9.3.1, 9.6.2, 9.8.5, 9.9.1, 9.10.2, 9.10.3
Review of Contract Documents and Field Conditions by Contractor
3.2, 3.12.7, 6.1.3
Review of Contractor's Submittals by Owner and Architect
3.10.1, 3.10.2, 3.11, 3.12, 4.2, 5.2, 6.1.3, 9.2, 9.8.2
Review of Shop Drawings, Product Data and Samples by Contractor
3.12
Rights and Remedies
1.1.2, 2.3, 2.4, 3.5, 3.7.4, 3.15.2, 4.2.6, 5.3, 5.4, 6.1, 6.3, 7.3.1, 8.3, 9.5.1, 9.7, 10.2.5, 10.3, 12.2.2, 12.2.4, **13.4**, 14
Royalties, Patents and Copyrights
3.17
(Paragraph deleted)
Safety of Persons and Property
10.2, 10.4
Safety Precautions and Programs
3.3.1, 4.2.2, 4.2.7, 5.3.1, **10.1**, 10.2, 10.4
Samples, Definition of
3.12.3
Samples, Shop Drawings, Product Data and
3.11, **3.12**, 4.2.7
Samples at the Site, Documents and
3.11
Schedule of Values
9.2, 9.2.1, 9.2.2, 9.3.1
Schedules, Construction
3.10, 3.12.1, 3.12.2, 6.1.3, 15.1.5.2
Separate Contracts and Contractors
1.1.4, 3.12.5, 3.14.2, 4.2.4, 4.2.7, 6, 8.3.1, 12.1.2
Shop Drawings, Definition of
3.12.1
Shop Drawings, Product Data and Samples
3.11, **3.12**, 4.2.7
Site, Use of
3.13, 6.1.1, 6.2.1
Site Inspections
3.2.2, 3.3.3, 3.7.1, 3.7.4, 4.2, 9.4.2, 9.10.1, 13.5
Site Visits, Architect's
3.7.4, 4.2.2, 4.2.9, 9.4.2, 9.5.1, 9.9.2, 9.10.1, 13.5
Special Inspections and Testing
4.2.6, 12.2.1, 13.5
Specifications, Definition of
1.1.6
Specifications
1.1.1, **1.1.6**, 1.2.2, 1.5, 3.11, 3.12.10, 3.17, 4.2.14
Statute of Limitations
13.7
Stopping the Work
2.3, 9.7, 10.3, 14.1
Stored Materials
6.2.1, 9.3.2, 10.2.1.2, 10.2.4
Subcontractor, Definition of
5.1.1
SUBCONTRACTORS
5
Subcontractors, Work by
1.2.2, 3.3.2, 3.12.1, 4.2.3, 5.2.3, 5.3, 5.4, 9.3.1.2, 9.6.7
Subcontractual Relations
5.3, 5.4, 9.3.1.2, 9.6, 9.10, 10.2.1, 14.1, 14.2.1
Submittals
3.10, 3.11, 3.12, 4.2.7, 5.2.1, 5.2.3, 7.3.7, 9.2, 9.3, 9.8, 9.9.1, 9.10.2, 9.10.3, 11.1.3
Submittal Schedule
3.10.2, 3.12.5, 4.2.7
Subrogation, Waivers of
6.1.1, **11.3.7**
Substantial Completion
4.2.9, 8.1.1, 8.1.3, 8.2.3, 9.4.2, **9.8**, 9.9.1, 9.10.3, 12.2, 13.7

AIA Document A201® – 2007. Copyright © 1911, 1915, 1918, 1925, 1937, 1951, 1958, 1961, 1963, 1966, 1970, 1976, 1987, 1997 and 2007 by The American Institute of Architects. All rights reserved. The "American Institute of Architects," "AIA," the AIA Logo, "A201," and "AIA Contract Documents" are registered trademarks and may not be used without permission. This document was produced by AIA software at 12:23:28 ET on 11/11/2020 under Order No.6115176972 which expires on 09/19/2021, is not for resale, is licensed for one-time use only, and may only be used in accordance with the AIA Contract Documents® Terms of Service. To report copyright violations, e-mail copyright@aia.org.
User Notes:

Substantial Completion, Definition of
9.8.1
Substitution of Subcontractors
5.2.3, 5.2.4
Substitution of Architect
4.1.3
Substitutions of Materials
3.4.2, 3.5, 7.3.8
Sub-subcontractor, Definition of
5.1.2
Subsurface Conditions
3.7.4
Successors and Assigns
13.2
Superintendent
3.9, 10.2.6
Supervision and Construction Procedures
1.2.2, **3.3**, 3.4, 3.12.10, 4.2.2, 4.2.7, 6.1.3, 6.2.4, 7.1.3, 7.3.7, 8.2, 8.3.1, 9.4.2, 10, 12, 14, 15.1.3
Surety
5.4.1.2, 9.8.5, 9.10.2, 9.10.3, 14.2.2, 15.2.7
Surety, Consent of
9.10.2, 9.10.3
Surveys
2.2.3
Suspension by the Owner for Convenience
14.3
Suspension of the Work
5.4.2, 14.3
Suspension or Termination of the Contract
5.4.1.1, 14
Taxes
3.6, 3.8.2.1, 7.3.7.4
Termination by the Contractor
14.1, 15.1.6
Termination by the Owner for Cause
5.4.1.1, **14.2, 14.2.5,** 15.1.6
Termination by the Owner for Convenience
14.2.5, 14.4
Termination of the Architect
4.1.3
Termination of the Contractor
14.2.2
TERMINATION OR SUSPENSION OF THE CONTRACT
14
Tests and Inspections
3.1.3, 3.3.3, 4.2.2, 4.2.6, 4.2.9, 9.4.2, 9.8.3, 9.9.2, 9.10.1, 10.3.2, 11.4.1, 12.2.1, **13.5**
TIME
8
Time, Delays and Extensions of
3.2.4, 3.7.4, 5.2.3, 7.2.1, 7.3.1, 7.4, **8.3**, 9.5.1, 9.7, 10.3.2, 10.4.1, 14.3.2, 15.1.5, 15.2.5
Time Limits
2.1.2, 2.2, 2.4, 3.2.2, 3.10, 3.11, 3.12.5, 3.15.1, 4.2, 5.2, 5.3, 5.4, 6.2.4, 7.3, 7.4, 8.2, 9.2, 9.3.1, 9.3.3, 9.4.1, 9.5, 9.6, 9.7, 9.8, 9.9, 9.10, 11.1.3, 12.2, 13.5, 13.7, 14, 15.1.2
Time Limits on Claims
3.7.4, 10.2.8, **13.7**, 15.1.2
Title to Work
9.3.2, 9.3.3
Transmission of Data in Digital Form
1.6
UNCOVERING AND CORRECTION OF WORK
12
Uncovering of Work
12.1
Unforeseen Conditions, Concealed or Unknown
3.7.4, 8.3.1, 10.3
Unit Prices
7.3.3.2, 7.3.4
Use of Documents
1.1.1, 1.5, 2.2.5, 3.12.6, 5.3
Use of Site
3.13, 6.1.1, 6.2.1
Values, Schedule of
9.2, 9.3.1
Waiver of Claims by the Architect
13.4.2
Waiver of Claims by the Contractor
9.10.5, 13.4.2, 15.1.6
Waiver of Claims by the Owner
9.9.3, 9.10.3, 9.10.4, 9.10.6, 12.2.2.1, 13.4.2, 14.2.4, 15.1.6
Waiver of Consequential Damages
14.2.4, 15.1.6
Waiver of Liens
9.10.2, 9.10.4
Waivers of Subrogation
6.1.1, **11.3.7**
Warranty
3.5, 4.2.9, 9.3.3, 9.8.4, 9.9.1, 9.10.4, 12.2.2, 13.7
Weather Delays
15.1.5.2
Work, Definition of
1.1.3
Written Consent
1.5.2, 3.4.2, 3.7.4, 3.12.8, 3.14.2, 4.1.2, 9.3.2, 9.8.5, 9.9.1, 9.10.2, 9.10.3, 11.4.1, 13.2, 13.4.2
Written Interpretations
4.2.11, 4.2.12
Written Notice
2.3, 2.4, 3.3.1, 3.9, 3.12.9, 3.12.10, 5.2.1, 8.2.2, 9.7, 9.10, 10.2.2, 10.3, 11.1.3, 12.2.2, 12.2.4, **13.3**, 14,
Written Orders
1.1.1, 2.3, 3.9, 7, 8.2.2, 12.1, 12.2, 13.5.2, 14.3.1, 15.1.2

AIA Document A201® – 2007. Copyright © 1911, 1915, 1918, 1925, 1937, 1951, 1958, 1961, 1963, 1966, 1970, 1976, 1987, 1997 and 2007 by The American Institute of Architects. All rights reserved. The "American Institute of Architects," "AIA," the AIA Logo, "A201," and "AIA Contract Documents" are registered trademarks and may not be used without permission. This document was produced by AIA software at 12:23:28 ET on 11/11/2020 under Order No.6115176972 which expires on 09/19/2021, is not for resale, is licensed for one-time use only, and may only be used in accordance with the AIA Contract Documents® Terms of Service. To report copyright violations, e-mail copyright@aia.org.
User Notes:
(1517250872)

ARTICLE 1 GENERAL PROVISIONS

§ 1.1 BASIC DEFINITIONS

§ 1.1.1 THE CONTRACT DOCUMENTS

The Contract Documents are enumerated in the Agreement between the Owner and Contractor (hereinafter the Agreement) and consist of the Agreement, Conditions of the Contract (General, Supplementary and other Conditions), Drawings, Specifications, Addenda issued prior to execution of the Contract, other documents listed in the Agreement and Modifications issued after execution of the Contract. A Modification is (1) a written amendment to the Contract signed by both parties, (2) a Change Order, (3) a Construction Change Directive or (4) a written order for a minor change in the Work issued by the Architect. As specifically enumerated in the Agreement, the Contract Documents shall include the advertisement or invitation to bid, Instructions to Bidders, sample forms, other information furnished by the Owner in anticipation of receiving bids or proposals, the Contractor's bid or proposal, or portions of Addenda relating to bidding requirements.

§ 1.1.2 THE CONTRACT

The Contract Documents form the Contract for Construction. The Contract represents the entire and integrated agreement between the parties hereto and supersedes prior negotiations, representations or agreements, either written or oral. The Contract may be amended or modified only by a Modification. The Contract Documents shall not be construed to create a contractual relationship of any kind (1) between the Contractor and the Architect or the Architect's consultants, (2) between the Owner and a Subcontractor or a Sub-subcontractor, (3) between the Owner and the Architect or the Architect's consultants or (4) between any persons or entities other than the Owner and the Contractor. The Architect shall, however, be entitled to performance and enforcement of obligations under the Contract intended to facilitate performance of the Architect's duties.

§ 1.1.3 THE WORK

The term "Work" means the construction and services required by the Contract Documents, whether completed or partially completed, and includes all other labor, materials, equipment and services provided or to be provided by the Contractor to fulfill the Contractor's obligations. The Work may constitute the whole or a part of the Project.

§ 1.1.4 THE PROJECT

The Project is the total construction of which the Work performed under the Contract Documents may be the whole or a part and which may include construction by the Owner and by separate contractors.

§ 1.1.5 THE DRAWINGS

The Drawings are the graphic and pictorial portions of the Contract Documents showing the design, location and dimensions of the Work, generally including plans, elevations, sections, details, schedules and diagrams.

§ 1.1.6 THE SPECIFICATIONS

The Specifications are that portion of the Contract Documents consisting of the written requirements for materials, equipment, systems, standards and workmanship for the Work, and performance of related services.

§ 1.1.7 INSTRUMENTS OF SERVICE

Instruments of Service are representations, in any medium of expression now known or later developed, of the tangible and intangible creative work performed by the Architect and the Architect's consultants under the Architect respective professional services agreements with the Owner. Instruments of Service may include, without limitation, studies, surveys, models, sketches, drawings, specifications, and other similar materials. As the design progresses and payments to the Architect are made by the Owner the instruments of services become the property of The Board of Education of Frederick County, see 1.5.1 Ownership and Use of Drawings, Specifications and Other Instruments of Service.

§ 1.1.8 INITIAL DECISION MAKER

The Initial Decision Maker is the person identified in the Agreement to render initial decisions on Claims in accordance with Section 15.2 and certify termination of the Agreement under Section 14.2.2.

§ 1.2 CORRELATION AND INTENT OF THE CONTRACT DOCUMENTS

§ 1.2.1 The intent of the Contract Documents is to include all items necessary for the proper execution and completion of the Work by the Contractor. The Contract Documents are complementary, and what is required by one shall be as

AIA Document A201® – 2007. Copyright © 1911, 1915, 1918, 1925, 1937, 1951, 1958, 1961, 1963, 1966, 1970, 1976, 1987, 1997 and 2007 by The American Institute of Architects. All rights reserved. The "American Institute of Architects," "AIA," the AIA Logo, "A201," and "AIA Contract Documents" are registered trademarks and may not be used without permission. This document was produced by AIA software at 12:23:28 ET on 11/11/2020 under Order No.6115176972 which expires on 09/19/2021, is not for resale, is licensed for one-time use only, and may only be used in accordance with the AIA Contract Documents® Terms of Service. To report copyright violations, e-mail copyright@aia.org.
User Notes:

binding as if required by all; performance by the Contractor shall be required only to the extent consistent with the Contract Documents and reasonably inferable from them as being necessary to produce the indicated results. In the event of conflicts or discrepancies among the Contract Documents, interpretations will be based on the following priorities:

1. The Agreement
2. Addenda with those or late date having precedence over those of earlier date
3. The Supplementary Conditions
4. The General Conditions of the Contract for Construction
5. The Contract Specifications
6. The Contract Drawings

§ 1.2.2 Organization of the Specifications into divisions, sections and articles, and arrangement of Drawings shall not control the Contractor in dividing the Work among Subcontractors or in establishing the extent of Work to be performed by any trade.

§ 1.2.3 Unless otherwise stated in the Contract Documents, words that have well-known technical or construction industry meanings are used in the Contract Documents in accordance with such recognized meanings.

§ 1.3 CAPITALIZATION

Terms capitalized in these General Conditions include those that are (1) specifically defined, (2) the titles of numbered articles or (3) the titles of other documents published by the American Institute of Architects.

§ 1.4 INTERPRETATION

In the interest of brevity the Contract Documents frequently omit modifying words such as "all" and "any" and articles such as "the" and "an," but the fact that a modifier or an article is absent from one statement and appears in another is not intended to affect the interpretation of either statement.

§ 1.5 OWNERSHIP AND USE OF DRAWINGS, SPECIFICATIONS AND OTHER INSTRUMENTS OF SERVICE

§ 1.5.1 The Architect and the Architect's consultants shall be deemed the authors of the respective Instruments of Service, including the Drawings and Specifications, and The Board of Education of Frederick County will own and retain all common law, statutory and other reserved rights, including copyrights. The Contractor, Subcontractors, Sub-subcontractors, and material or equipment suppliers shall not own or claim a copyright in the Instruments of Service. Submittal or distribution to meet official regulatory requirements or for other purposes in connection with this Project is not to be construed as publication in derogation of the Architect's or Architect's consultants' reserved rights.

§ 1.5.2 The Contractor, Subcontractors, Sub-subcontractors and material or equipment suppliers are authorized to use and reproduce the Instruments of Service provided to them solely and exclusively for execution of the Work. All copies made under this authorization shall bear the copyright notice, if any, shown on the Instruments of Service. The Contractor, Subcontractors, Sub-subcontractors, and material or equipment suppliers may not use the Instruments of Service on other projects or for additions to this Project outside the scope of the Work without the specific written consent of the Owner.

§ 1.6 TRANSMISSION OF DATA IN DIGITAL FORM

If the parties intend to transmit Instruments of Service or any other information or documentation in digital form, they shall endeavor to establish necessary protocols governing such transmissions, unless otherwise already provided in the Agreement or the Contract Documents.

ARTICLE 2 OWNER

§ 2.1 GENERAL

§ 2.1.1 The Owner is the person or entity identified as such in the Agreement and is referred to throughout the Contract Documents as if singular in number. The Owner shall designate in writing a representative who shall have express authority to bind the Owner with respect to all matters requiring the Owner's approval or authorization. The Architect does not have authority to bind the Owner with respect to all matters requiring the Owner's approval or authorization.

§ 2.1.2 The Owner shall furnish to the Contractor within fifteen days after receipt of a written request, information necessary and relevant for the Contractor to evaluate, give notice of or enforce mechanic's lien rights. Such

AIA Document A201® – 2007. Copyright © 1911, 1915, 1918, 1925, 1937, 1951, 1958, 1961, 1963, 1966, 1970, 1976, 1987, 1997 and 2007 by The American Institute of Architects. All rights reserved. The "American Institute of Architects," "AIA," the AIA Logo, "A201," and "AIA Contract Documents" are registered trademarks and may not be used without permission. This document was produced by AIA software at 12:23:28 ET on 11/11/2020 under Order No.6115176972 which expires on 09/19/2021, is not for resale, is licensed for one-time use only, and may only be used in accordance with the AIA Contract Documents® Terms of Service. To report copyright violations, e-mail copyright@aia.org.
User Notes:

information shall include a correct statement of the record legal title to the property on which the Project is located, usually referred to as the site, and the Owner's interest therein.

§ 2.2 INFORMATION AND SERVICES REQUIRED OF THE OWNER

§ 2.2.1 Is deleted.

§ 2.2.2 Except for permits and fees that are the responsibility of the Contractor under the Contract Documents, including those required under Section 3.7.1, the Owner shall secure and pay for necessary approvals, easements, assessments and charges required for construction, use or occupancy of permanent structures or for permanent changes in existing facilities. Fees for trade and specialty permits, including but not limited to, electrical, plumbing, elevator, fire review(s) and inspection, boiler, pressure vessel and fuel burning permits and all reinspections shall be paid by and at the Contractor's expense.

§ 2.2.3 The Owner shall furnish surveys describing physical characteristics, legal limitations and utility locations for the site of the Project which are known to the Owner, and a legal description of the site if requested by the Contractor. The Contractor shall be entitled to rely on the accuracy of information furnished by the Owner and shall exercise proper precautions relating to the safe performance of the Work.

§ 2.2.4 The Owner shall furnish information or services required of the Owner by the Contract Documents with reasonable promptness. The Owner shall also furnish any other information or services under the Owner's control and relevant to the Contractor's performance of the Work with reasonable promptness after receiving the Contractor's written request for such information or services.

§ 2.2.5 Unless otherwise provided in the Contract or Bidding Documents, the Owner shall furnish to the Contractor one copy of the Contract Documents for purposes of making reproductions pursuant to Section 1.5.2.

§ 2.3 OWNER'S RIGHT TO STOP THE WORK

If the Contractor fails to correct Work that is not in accordance with the requirements of the Contract Documents as required by Section 12.2 or fails to carry out Work in accordance with the Contract Documents, the Owner may issue a written order to the Contractor to stop the Work, or any portion thereof, until the cause for such order has been eliminated; however, the right of the Owner to stop the Work shall not give rise to a duty on the part of the Owner to exercise this right for the benefit of the Contractor or any other person or entity, except to the extent required by Section 6.1.3.

§ 2.4 OWNER'S RIGHT TO CARRY OUT THE WORK

If the Contractor defaults or neglects to carry out the Work in accordance with the Contract Documents and fails within a three-day period after receipt of written notice from the Owner to commence and continue correction of such default or neglect with diligence and promptness, the Owner may, without prejudice to or waiver of other remedies the Owner may have, correct such deficiencies. In such case an appropriate Change Order shall be issued deducting from payments then or thereafter due the Contractor the cost of correcting such deficiencies, including Owner's expenses and compensation for the Architect's additional services made necessary by such default, neglect or failure. Such action by the Owner and amounts charged to the Contractor are both subject to prior approval of the Architect. If payments then or thereafter due the Contractor are not sufficient to cover such amounts, the Contractor shall pay the difference to the Owner.

ARTICLE 3 CONTRACTOR

§ 3.1 GENERAL

§ 3.1.1 The Contractor is the person or entity identified as such in the Agreement and is referred to throughout the Contract Documents as if singular in number. The Contractor shall be lawfully licensed as required in the jurisdiction where the Project is located. The Contractor shall designate in writing a representative who shall have express authority to bind the Contractor with respect to all matters under this Contract. The term "Contractor" means the Contractor or the Contractor's authorized representative.

§ 3.1.2 The Contractor shall perform the Work in accordance with the Contract Documents.

AIA Document A201® – 2007. Copyright © 1911, 1915, 1918, 1925, 1937, 1951, 1958, 1961, 1963, 1966, 1970, 1976, 1987, 1997 and 2007 by The American Institute of Architects. All rights reserved. The "American Institute of Architects," "AIA," the AIA Logo, "A201," and "AIA Contract Documents" are registered trademarks and may not be used without permission. This document was produced by AIA software at 12:23:28 ET on 11/11/2020 under Order No.6115176972 which expires on 09/19/2021, is not for resale, is licensed for one-time use only, and may only be used in accordance with the AIA Contract Documents® Terms of Service. To report copyright violations, e-mail copyright@aia.org.
User Notes:

§ 3.1.3 The Contractor shall not be relieved of obligations to perform the Work in accordance with the Contract Documents either by activities or duties of the Owner or the Architect in the administration of the Contract, or by tests, inspections or approvals required or performed by persons or entities other than the Contractor.

§ 3.2 REVIEW OF CONTRACT DOCUMENTS AND FIELD CONDITIONS BY CONTRACTOR

§ 3.2.1 Execution of the Contract by the Contractor is a representation that the Contractor has visited the site, become familiar with local conditions under which the Work is to be performed and correlated personal observations with requirements of the Contract Documents. The Contractor represents that it has received all information it needs concerning the conditions of the Project site. The Contractor represents that it has inspected the location of the Work and has satisfied itself as to the condition thereof or unknown physical conditions of an unusual nature which differ materially from those ordinarily found to exist and generally recognized as inherent in construction activities of the character provided for in the Contract Documents. Based upon the foregoing inspections, understandings, agreements and acknowledgements, the Contractor agrees and acknowledges that the Contract Sum is just and reasonable compensation for all the Work and that the Work shall not result in any lateral or vertical movement of any structure due to the Contractor's construction activities. The Contractor shall exercise special care in executing subsurface Work in proximity of subsurface utilities, improvements and easements.

§ 3.2.2 Because the Contract Documents are complementary, the Contractor shall, before starting each portion of the Work, carefully study and compare the various Contract Documents relative to that portion of the Work, as well as the information furnished by the Owner pursuant to Section 2.2.3, shall take field measurements of any existing conditions related to that portion of the Work, and shall observe any conditions at the site affecting it. These obligations are for the purpose of facilitating coordination and construction by the Contractor and are not for the purpose of discovering errors, omissions, or inconsistencies in the Contract Documents; however, the Contractor shall promptly report in writing to the Architect and Owner any errors, inconsistencies or omissions discovered by or in the exercise of due diligence should have been discovered or made known to the Contractor as a request for information in such form as the Architect may require. It is recognized that the Contractor's review is made in the Contractor's capacity as a contractor and not as a licensed design professional, unless otherwise specifically provided in the Contract Documents. If the Contractor performs any construction activity knowing it involves a recognized error, inconsistency or omission in the Contract Documents without providing written notice to the Owner and Architect, the Contractor shall assume appropriate responsibility for such performance and shall bear the costs for correction.

§ 3.2.3 The Contractor is not required to ascertain that the Contract Documents are in accordance with applicable laws, statutes, ordinances, codes, rules and regulations, or lawful orders of public authorities, but the Contractor shall promptly report to the Architect in writing any nonconformity discovered by or in the exercise of due diligence should have been discovered or made known to the Contractor as a request for information in such form as the Architect may require.

§ 3.2.4 If the Contractor believes that additional cost or time is involved because of clarifications or instructions the Architect issues in response to the Contractor's notices or requests for information pursuant to Sections 3.2.2 or 3.2.3, the Contractor shall make Claims as provided in Article 15. If the Contractor fails to perform the obligations of Sections 3.2.2 or 3.2.3, the Contractor shall pay such costs and damages to the Owner as would have been avoided if the Contractor had performed such obligations. If the Contractor performs those obligations, the Contractor shall not be liable to the Owner or Architect for damages resulting from errors, inconsistencies or omissions in the Contract Documents, for differences between field measurements or conditions and the Contract Documents, or for nonconformities of the Contract Documents to applicable laws, statutes, ordinances, codes, rules and regulations, and lawful orders of public authorities.

§ 3.3 SUPERVISION AND CONSTRUCTION PROCEDURES

§ 3.3.1 The Contractor shall supervise and direct the Work, using the Contractor's best skill and attention. The Contractor shall be solely responsible for, and have control over, construction means, methods, techniques, sequences and procedures and for coordinating all portions of the Work under the Contract, unless the Contract Documents give other specific instructions concerning these matters. If the Contract Documents give specific instructions concerning construction means, methods, techniques, sequences or procedures, the Contractor shall evaluate the jobsite safety thereof and, except as stated below, shall be fully and solely responsible for the jobsite safety of such means, methods, techniques, sequences or procedures. If the Contractor determines that such means, methods, techniques, sequences or procedures may not be safe, the Contractor shall give timely written notice to the Owner and Architect and shall not proceed with that portion of the Work without further written instructions from the Architect. If the Contractor is then

AIA Document A201® – 2007. Copyright © 1911, 1915, 1918, 1925, 1937, 1951, 1958, 1961, 1963, 1966, 1970, 1976, 1987, 1997 and 2007 by The American Institute of Architects. All rights reserved. The "American Institute of Architects," "AIA," the AIA Logo, "A201," and "AIA Contract Documents" are registered trademarks and may not be used without permission. This document was produced by AIA software at 12:23:28 ET on 11/11/2020 under Order No.6115176972 which expires on 09/19/2021, is not for resale, is licensed for one-time use only, and may only be used in accordance with the AIA Contract Documents® Terms of Service. To report copyright violations, e-mail copyright@aia.org.
User Notes:

instructed to proceed with the required means, methods, techniques, sequences or procedures without acceptance of changes proposed by the Contractor, the Owner shall be solely responsible for any loss or damage arising solely from those Owner-required means, methods, techniques, sequences or procedures.

§ 3.3.2 The Contractor shall be responsible to the Owner for acts and omissions of the Contractor's employees, Subcontractors and their agents and employees, and other persons or entities performing portions of the Work for, or on behalf of, the Contractor or any of its Subcontractors.

§ 3.3.3 The Contractor shall be responsible for inspection of portions of Work already performed to determine that such portions are in proper condition to receive subsequent Work.

§ 3.4 LABOR AND MATERIALS

§ 3.4.1 Unless otherwise provided in the Contract Documents, the Contractor shall provide and pay for labor, materials, equipment, tools, construction equipment and machinery, water, heat, utilities, transportation, and other facilities and services necessary for proper execution and completion of the Work, whether temporary or permanent and whether or not incorporated or to be incorporated in the Work.

§ 3.4.2 Except in the case of minor changes in the Work authorized by the Architect in accordance with Sections 3.12.8 or 7.4, the Contractor may make substitutions only with the consent of the Owner, after evaluation by the Architect and in accordance with a Change Order or Construction Change Directive.

§ 3.4.3 The Contractor shall enforce strict discipline and good order among the Contractor's employees and other persons carrying out the Work. The Contractor shall not permit employment of unfit persons or persons not properly skilled in tasks assigned to them.

§ 3.4.4 The Contractor shall not be relieved of obligations to perform the Work in accordance with the Contract Documents either by activities or duties of the Owner or the Architect or of other Contractors during the performance of the Work or by Tests, inspections or approvals required or performed by persons other than the Contractor, including inspections or approvals performed by the Owner's personnel or by any public authority.

§ 3.5 WARRANTY

§ 3.5.1 The Contractor warrants to the Owner and Architect that materials and equipment furnished under the Contract will be of good quality and new unless the Contract Documents require or permit otherwise. The Contractor further warrants that the Work will conform to the requirements of the Contract Documents and will be free from defects, except for those inherent in the quality of the Work the Contract Documents require or permit. Work, materials, or equipment not conforming to these requirements may be considered defective. The Contractor's warranty excludes remedy for damage or defect caused by abuse, alterations to the Work not executed by the Contractor, improper or insufficient maintenance, improper operation, or normal wear and tear and normal usage. If required by the Architect, the Contractor shall furnish satisfactory evidence as to the kind and quality of materials and equipment.

§ 3.5.2 The Minimum Warranty Period will be two (2) years from the date of substantial completion of the project. The Warranty shall include extended warranty period(s) available from equipment manufactures and or extended warranties as required by project specification are required as if individually enumerated herein.

§ 3.5.3 Notwithstanding any other contract provisions to the contrary, the mechanical system and plumbing system must be completely balanced and such balance reports must be reviewed and accepted by the Engineer before the warranty/guarantee period will begin.

§ 3.6 TAXES

The Contractor shall pay sales, consumer, use and similar taxes for the Work provided by the Contractor that are legally enacted when bids are received or negotiations concluded, whether or not yet effective or merely scheduled to go into effect.

§ 3.7 PERMITS, FEES, NOTICES AND COMPLIANCE WITH LAWS

§ 3.7.1 Unless otherwise provided in the Contract Documents, the Contractor shall secure and pay for the building permit as well as for other permits, fees, licenses, inspections and reinspections by government agencies necessary for proper execution and completion of the Work that are customarily secured after execution of the Contract and legally

AIA Document A201® – 2007. Copyright © 1911, 1915, 1918, 1925, 1937, 1951, 1958, 1961, 1963, 1966, 1970, 1976, 1987, 1997 and 2007 by The American Institute of Architects. All rights reserved. The "American Institute of Architects," "AIA," the AIA Logo, "A201," and "AIA Contract Documents" are registered trademarks and may not be used without permission. This document was produced by AIA software at 12:23:28 ET on 11/11/2020 under Order No.6115176972 which expires on 09/19/2021, is not for resale, is licensed for one-time use only, and may only be used in accordance with the AIA Contract Documents® Terms of Service. To report copyright violations, e-mail copyright@aia.org.
User Notes:

required at the time bids are received. Fees for trade and a specialty permit including, but not limited to, electrical, plumbing, elevator, fire review(s), inspections and reinspections, boiler, pressure vessel and fuel burning permits, shall be paid by and at Contractor's expense.

§ 3.7.2 The Contractor shall comply with and give notices required by applicable laws, statutes, ordinances, codes, rules and regulations, and lawful orders of public authorities applicable to performance of the Work. Compliance with local governing jurisdiction requirements shall be completed at no additional cost to the Owner.

§ 3.7.3 If the Contractor performs Work knowing it to be contrary to applicable laws, statutes, ordinances, codes, rules and regulations, or lawful orders of public authorities, the Contractor shall assume appropriate responsibility for such Work and shall bear the costs attributable to correction. The provisions of this Agreement regarding compensation and damages, including delay damages, shall apply.

§ 3.7.4 Concealed or Unknown Conditions. If the Contractor encounters conditions at the site that are (1) subsurface or otherwise concealed physical conditions that differ materially from those indicated in the Contract Documents or (2) unknown physical conditions of an unusual nature, that differ materially from those ordinarily found to exist and generally recognized as inherent in construction activities of the character provided for in the Contract Documents, the Contractor shall promptly provide notice to the Owner and the Architect before conditions are disturbed and in no event later than 21 days after first observance of the conditions. The Architect will promptly investigate such conditions and, if the Architect determines that they differ materially and cause an increase or decrease in the Contractor's cost of, or time required for, performance of any part of the Work, will recommend an equitable adjustment in the Contract Sum or Contract Time, or both. If the Architect determines that the conditions at the site are not materially different from those indicated in the Contract Documents and that no change in the terms of the Contract is justified, the Architect shall promptly notify the Owner and Contractor in writing, stating the reasons. If either party disputes the Architect's determination or recommendation, that party may proceed as provided in Article 15.

§ 3.7.5 If, in the course of the Work, the Contractor encounters human remains or recognizes the existence of burial markers, archaeological sites or wetlands not indicated in the Contract Documents, the Contractor shall immediately suspend any operations that would affect them and shall notify the Owner and Architect. Upon receipt of such notice, the Owner shall promptly take any action necessary to obtain governmental authorization required to resume the operations. The Contractor shall continue to suspend such operations until otherwise instructed by the Owner but shall continue with all other operations that do not affect those remains or features. Requests for adjustments in the Contract Sum and Contract Time arising from the existence of such remains or features may be made as provided in Article 15.

§ 3.8 ALLOWANCES

§ 3.8.1 The Contractor shall include in the Contract Sum all allowances stated in the Contract Documents. Items covered by allowances shall be supplied for such amounts and by such persons or entities as the Owner may direct, but the Contractor shall not be required to employ persons or entities to whom the Contractor has reasonable objection.

§ 3.8.2 Unless otherwise provided in the Contract Documents,

.1 Allowances shall cover the cost to the Contractor of materials and equipment delivered at the site and all required taxes, less applicable trade discounts;

.2 Contractor's costs for unloading and handling at the site, labor, installation costs, overhead, profit and other expenses contemplated for stated allowance amounts shall be included in the Contract Sum but not in the allowances; and

.3 Whenever costs are more than or less than allowances, the Contract Sum shall be adjusted accordingly by Change Order. The amount of the Change Order shall reflect (1) the difference between actual costs and the allowances under Section 3.8.2.1 and (2) changes in Contractor's costs under Section 3.8.2.2.

§ 3.8.3 Materials and equipment under an allowance shall be selected by the Owner with reasonable promptness.

§ 3.9 SUPERINTENDENT AND PROJECT MANAGER

§ 3.9.1 The Contractor shall employ a competent superintendent, project manager and necessary assistants who shall be in attendance at the Project site during performance of the Work. The superintendent shall represent the Contractor, and communications given to the superintendent shall be as binding as if given to the Contractor. Communications

AIA Document A201® – 2007. Copyright © 1911, 1915, 1918, 1925, 1937, 1951, 1958, 1961, 1963, 1966, 1970, 1976, 1987, 1997 and 2007 by The American Institute of Architects. All rights reserved. The "American Institute of Architects," "AIA," the AIA Logo, "A201," and "AIA Contract Documents" are registered trademarks and may not be used without permission. This document was produced by AIA software at 12:23:28 ET on 11/11/2020 under Order No.6115176972 which expires on 09/19/2021, is not for resale, is licensed for one-time use only, and may only be used in accordance with the AIA Contract Documents® Terms of Service. To report copyright violations, e-mail copyright@aia.org.
User Notes: (1517250872)

shall be confirmed in writing. The Superintendent and necessary staff members shall be in attendance at the Project site during the performance of the Work including completion of all Punch List items.

§ 3.9.2 Prior to being assigned to the Project both the Project Manager and Superintendent shall be subject to the approval of the Owner. Once approved, the Superintendent and Project Manager will not be removed from the Project without the Owner's written consent. The Owner reserves and retains the right, at its sole and absolute discretion, to order the Contractor to replace any of the Contractor's employees. In the event the Owner requests Contractor employees' removal, the Contractor shall promptly replace such employees with competent replacements satisfactory to the Owner. The Contractor shall not change the Superintendent or Project Manager without the Owner's consent.

§ 3.9.3 The Contractor shall not employ a proposed superintendent to whom the Owner or Architect has made reasonable and timely objection. The Contractor shall not change the superintendent without the Owner's consent, which shall not unreasonably be withheld or delayed.

§ 3.10 CONTRACTOR'S CONSTRUCTION SCHEDULES

§ 3.10.1 The Contractor, promptly after being awarded the Contract and as a condition precedent to the first Application for Payment, shall prepare and submit for the Owner's and Architect's information a Contractor's construction schedule for the Work. The schedule shall not exceed time limits current under the Contract Documents, shall be revised at no cost to the Owner at appropriate intervals as required by the conditions of the Work and Project, shall be related to the entire Project to the extent required by the Contract Documents, and shall provide for expeditious and practicable execution of the Work. The Owner reserves the right to have the Contractor update the schedule with each Application for Payment,

§ 3.10.2 The Contractor shall prepare preliminary construction and a submittal schedule, within 14 days after being awarded the Contract and complete schedules before 60 contract days have elapsed. The contractor shall update the schedules thereafter as necessary to maintain current construction and submittal schedules, and shall submit the schedule(s) for the Architect's and Owner's review. The Architect's and Owner's review shall not unreasonably be delayed or withheld. The submittal schedule shall (1) be coordinated with the Contractor's construction schedule, and (2) allow the Architect reasonable time to review submittals. Contractor's Construction Schedule shall be in a Critical Path Method (CPM) and bar chart format, indicating sufficient detail, task(s) (the work) and durations(s) (start and completion) of each major item of the Work, the current status of each major item of Work indicating staffing and equipment to comply with the Contract Substantial Completion Date and any Owner approves extensions. Contractor(s) shall provide additional detail when requested by the Architect or Owner and update their Proposed Contractor Schedule to be compliant with the Contract Substantial Completion Date(s). Within 7 days of a request by the Architect or Owner, the Contractor shall furnish to the Owner and Architect a Progress Schedules showing the current progress and completion stage of the Work as compared to the Original Contract Schedule. Progress Schedules shall clearly identify any item of Work, which is behind Schedule along with the Contractor's increased manpower and equipment necessary to comply with the Contract Schedule including any time extensions approved by the Owner. Progress Schedule(s) shall be provided in a Critical Path Method (CPM), bar chart format and electronic as requested by the Owner. During the Owners review the Owner may choose to advise the contractor of work that will be performed by the owner's forces or the Owners separate Contractors. If the Contractor fails to submit a submittal schedule, the Contractor shall not be entitled to any increase in Contract Sum or extension of Contract Time based on the time required for review of submittals. The Contractor shall provide the Owner and Architect updated schedules as a condition precedent to progress payments. The up dated schedules shall be provided by the Contractor as the project progresses and as requested by the Owner or Architect.

§ 3.10.3 The Contractor shall perform the Work in accordance with the most recent schedules reviewed by the Owner and Architect without objection.

§ 3.11 DOCUMENTS AND SAMPLES AT THE SITE

The Contractor shall maintain at the site for the Owner one copy of the Drawings, Specifications, Addenda, Change Orders and other Modifications, in good order and marked currently to indicate field changes and selections made during construction, and one copy of approved Shop Drawings, Product Data, Samples and similar required submittals. These shall be available to the Architect and shall be delivered to the Architect for submittal to the Owner upon completion of the Work as a record of the Work as constructed. The Owner may request, and Contractor shall provide, at any time during the course of the Project, As-Built Drawings that reflect the then current stage of construction as actually built and be submitted to the Owner for its review. If such drawings are not provided the

AIA Document A201® – 2007. Copyright © 1911, 1915, 1918, 1925, 1937, 1951, 1958, 1961, 1963, 1966, 1970, 1976, 1987, 1997 and 2007 by The American Institute of Architects. All rights reserved. The "American Institute of Architects," "AIA," the AIA Logo, "A201," and "AIA Contract Documents" are registered trademarks and may not be used without permission. This document was produced by AIA software at 12:23:28 ET on 11/11/2020 under Order No.6115176972 which expires on 09/19/2021, is not for resale, is licensed for one-time use only, and may only be used in accordance with the AIA Contract Documents® Terms of Service. To report copyright violations, e-mail copyright@aia.org.
User Notes: (1517250872)

Owner may withhold progress payment, or in its discretion a portion thereof, until the requested drawings are up to date and provided for the Owners review.

§ 3.12 SHOP DRAWINGS, PRODUCT DATA AND SAMPLES

§ 3.12.1 Shop Drawings are drawings, diagrams, schedules and other data specially prepared for the Work by the Contractor or a Subcontractor, Sub-subcontractor, manufacturer, supplier or distributor to illustrate some portion of the Work.

§ 3.12.2 Product Data are illustrations, standard schedules, performance charts, instructions, brochures, diagrams and other information furnished by the Contractor to illustrate materials or equipment for some portion of the Work.

§ 3.12.3 Samples are physical examples that illustrate materials, equipment or workmanship and establish standards by which the Work will be judged.

§ 3.12.4 Shop Drawings, Product Data, Samples and similar submittals are not Contract Documents. Their purpose is to demonstrate the way by which the Contractor proposes to conform to the information given and the design concept expressed in the Contract Documents for those portions of the Work for which the Contract Documents require submittals. Review by the Architect is subject to the limitations of Section 4.2.7. The Contractor shall submit shop drawings to the Architect for all structural elements of the Work and all other portions of the Work required by the Contract Documents. Informational submittals upon which the Architect is not expected to take responsive action may be so identified in the Contract Documents. Submittals that are not required by the Contract Documents may be returned by the Architect without action.

§ 3.12.5 The Contractor shall review for compliance with the Contract Documents, approve and submit to the Architect Shop Drawings, Product Data, Samples and similar submittals required by the Contract Documents in accordance with the submittal schedule approved by the Architect or, in the absence of an approved submittal schedule, with reasonable promptness and in such sequence as to cause no delay in the Work or in the activities of the Owner or of separate contractors.

§ 3.12.6 By submitting Shop Drawings, Product Data, Samples and similar submittals, the Contractor represents to the Owner and Architect that the Contractor has (1) reviewed and approved them, (2) determined and verified materials, field measurements and field construction criteria related thereto, or will do so and (3) checked and coordinated the information contained within such submittals with the requirements of the Work and of the Contract Documents.

§ 3.12.7 The Contractor shall perform no portion of the Work for which the Contract Documents require submittal and review of Shop Drawings, Product Data, Samples or similar submittals until the respective submittal has been approved by the Architect.

§ 3.12.8 The Work shall be in accordance with approved submittals except that the Contractor shall not be relieved of responsibility for deviations from requirements of the Contract Documents by the Architect's approval of Shop Drawings, Product Data, Samples or similar submittals unless the Contractor has specifically informed the Architect in writing of such deviation at the time of submittal and (1) the Architect has given written approval to the specific deviation as a minor change in the Work, or (2) a Change Order or Construction Change Directive has been issued authorizing the deviation. The Contractor shall not be relieved of responsibility for errors or omissions in Shop Drawings, Product Data, Samples or similar submittals by the Architect's approval thereof.

§ 3.12.9 The Contractor shall direct specific attention, in writing or on resubmitted Shop Drawings, Product Data, Samples or similar submittals, to revisions other than those requested by the Architect on previous submittals. In the absence of such written notice, the Architect's approval of a resubmission shall not apply to such revisions.

§ 3.12.10 The Contractor shall not be required to provide professional services that constitute the practice of architecture or engineering unless such services are specifically required by the Contract Documents for a portion of the Work or unless the Contractor needs to provide such services in order to carry out the Contractor's responsibilities for construction means, methods, techniques, sequences and procedures. The Contractor shall not be required to provide professional services in violation of applicable law. If professional design services or certifications by a design professional related to systems, materials or equipment are specifically required of the Contractor by the Contract Documents, the Owner and the Architect will specify all performance and design criteria that such services

AIA Document A201® – 2007. Copyright © 1911, 1915, 1918, 1925, 1937, 1951, 1958, 1961, 1963, 1966, 1970, 1976, 1987, 1997 and 2007 by The American Institute of Architects. All rights reserved. The "American Institute of Architects," "AIA," the AIA Logo, "A201," and "AIA Contract Documents" are registered trademarks and may not be used without permission. This document was produced by AIA software at 12:23:28 ET on 11/11/2020 under Order No.6115176972 which expires on 09/19/2021, is not for resale, is licensed for one-time use only, and may only be used in accordance with the AIA Contract Documents® Terms of Service. To report copyright violations, e-mail copyright@aia.org.
User Notes:

must satisfy. The Contractor shall cause such services or certifications to be provided by a properly licensed design professional, whose signature and seal shall appear on all drawings, calculations, specifications, certifications, Shop Drawings and other submittals prepared by such professional. Shop Drawings and other submittals related to the Work designed or certified by such professional, if prepared by others, shall bear such professional's written approval when submitted to the Architect. The Owner and the Architect shall be entitled to rely upon the adequacy, accuracy and completeness of the services, certifications and approvals performed or provided by such design professionals, provided the Owner and Architect have specified to the Contractor all performance and design criteria that such services must satisfy. Pursuant to this Section 3.12.10, the Architect will review, approve or take other appropriate action on submittals only for the limited purpose of checking for conformance with information given and the design concept expressed in the Contract Documents. The Contractor shall not be responsible for the adequacy of the performance and design criteria specified in the Contract Documents.

§ 3.13 USE OF SITE

The Contractor shall confine operations at the site to areas permitted by applicable laws, statutes, ordinances, codes, rules and regulations, and lawful orders of public authorities and the Contract Documents and shall not unreasonably encumber the site with materials or equipment.

§ 3.14 CUTTING AND PATCHING

§ 3.14.1 The Contractor shall be responsible for cutting, fitting or patching required to complete the Work or to make its parts fit together properly. All areas requiring cutting, fitting and patching shall be restored to the condition existing prior to the cutting, fitting and patching, unless otherwise required by the Contract Documents.

§ 3.14.2 The Contractor shall not damage or endanger a portion of the Work or fully or partially completed construction of the Owner or separate contractors by cutting, patching or otherwise altering such construction, or by excavation. The Contractor shall not cut or otherwise alter such construction by the Owner or a separate contractor except with written consent of the Owner and of such separate contractor; such consent shall not be unreasonably withheld. The Contractor shall not unreasonably withhold from the Owner or a separate contractor the Contractor's consent to cutting or otherwise altering the Work.

§ 3.15 CLEANING UP

§ 3.15.1 The Contractor shall keep the premises and surrounding area free from accumulation of waste materials or rubbish caused by operations under the Contract. At completion of the Work, the Contractor shall remove waste materials, rubbish, the Contractor's tools, construction equipment, machinery and surplus materials from and about the Project.

§ 3.15.2 If the Contractor fails to clean up as provided in the Contract Documents, the Owner may do so and Owner shall be entitled to reimbursement from the Contractor.

§ 3.16 ACCESS TO WORK

The Contractor shall provide the Owner and Architect access to the Work in preparation and progress wherever located.

§ 3.17 ROYALTIES, PATENTS AND COPYRIGHTS

The Contractor shall pay all royalties and license fees. The Contractor shall defend suits or claims for infringement of copyrights and patent rights and shall hold the Owner and Architect harmless from loss on account thereof, but shall not be responsible for such defense or loss when a particular design, process or product of a particular manufacturer or manufacturers is required by the Contract Documents, or where the copyright violations are contained in Drawings, Specifications or other documents prepared by the Owner or Architect. However, if the Contractor has reason to believe that the required design, process or product is an infringement of a copyright or a patent, the Contractor shall be responsible for such loss unless such information is promptly furnished to the Architect.

§ 3.18 INDEMNIFICATION

§ 3.18.1 To the fullest extent permitted by law the Contractor shall indemnify and hold harmless the Owner, Architect, Architect's consultants, and agents and employees of any of them from and against claims, damages, losses and expenses, including but not limited to attorneys' fees, arising out of or resulting from performance of the Work, provided that such claim, damage, loss or expense is attributable to bodily injury, sickness, disease or death, or to injury to or destruction of tangible property (other than the Work itself), but only to the extent caused by the negligent

AIA Document A201® – 2007. Copyright © 1911, 1915, 1918, 1925, 1937, 1951, 1958, 1961, 1963, 1966, 1970, 1976, 1987, 1997 and 2007 by The American Institute of Architects. All rights reserved. The "American Institute of Architects," "AIA," the AIA Logo, "A201," and "AIA Contract Documents" are registered trademarks and may not be used without permission. This document was produced by AIA software at 12:23:28 ET on 11/11/2020 under Order No.6115176972 which expires on 09/19/2021, is not for resale, is licensed for one-time use only, and may only be used in accordance with the AIA Contract Documents® Terms of Service. To report copyright violations, e-mail copyright@aia.org.
User Notes:

acts or omissions of the Contractor, a Subcontractor, anyone directly or indirectly employed by them or anyone for whose acts they may be liable, regardless of whether or not such claim, damage, loss or expense is caused in part by a party indemnified hereunder including but not limited to the contributing negligence of such party to be indemnified. Such obligation shall not be construed to negate, abridge, or reduce other rights or obligations of indemnity that would otherwise exist as to a party or person described in this Section 3.18.

§ 3.18.2 In claims against any person or entity indemnified under this Section 3.18 by an employee of the Contractor, a Subcontractor, anyone directly or indirectly employed by them or anyone for whose acts they may be liable, the indemnification obligation under Section 3.18.1 shall not be limited by a limitation on amount or type of damages, compensation or benefits payable by or for the Contractor or a Subcontractor under workers' compensation acts, disability benefit acts or other employee benefit acts.

ARTICLE 4 ARCHITECT

§ 4.1 GENERAL

§ 4.1.1 The Owner shall retain an architect lawfully licensed to practice architecture or an entity lawfully practicing architecture in the jurisdiction where the Project is located. That person or entity is identified as the Architect in the Agreement and is referred to throughout the Contract Documents as if singular in number.

§ 4.1.2 Duties, responsibilities and limitations of authority of the Architect as set forth in the Contract Documents shall not be restricted, modified or extended without written consent of the Owner, Contractor and Architect. Consent shall not be unreasonably withheld.

§ 4.1.3 If the employment of the Architect is terminated, the Owner shall employ a successor architect as to whom the Contractor has no reasonable objection and whose status under the Contract Documents shall be that of the Architect.

§ 4.2 ADMINISTRATION OF THE CONTRACT

§ 4.2.1 The Architect will provide administration of the Contract as described in the Contract Documents and will be an Owner's representative during construction until the date the Architect issues the final Certificate for Payment. The Architect will have authority to act on behalf of the Owner only to the extent provided in the Contract Documents.

§ 4.2.2 The duties of the Architect shall be governed by the Agreement between the Owner and Architect, and will review the site at intervals appropriate to the stage of construction to become generally familiar with the progress and quality of the portion of the Work completed, and to determine in general if the Work observed is being performed in a manner indicating that the Work, when fully completed, will be in accordance with the Contract Documents. The Architect will not have control over, charge of, or responsibility for, the construction means, methods, techniques, sequences or procedures, or for the safety precautions and programs in connection with the Work, since these are solely the Contractor's rights and responsibilities under the Contract Documents, except as provided in Section 3.3.1. Notwithstanding other provisions in this Agreement to the contrary, for the purpose of effectuating the Architect's duties in this section, the Architect shall be responsible for exercising reasonable care and diligence in observing on-going Work. No inspection or approval or failure to inspect or approve by the Architect shall relieve the Contractor from complying in all respects with the requirements of the Contract Documents.

§ 4.2.3 On the basis of the site reviews, the Architect will report to the Owner and copy the Contractor about the progress and quality of the portion of the Work completed reporting (1) known deviations from the Contract Documents and from the most recent construction schedule submitted by the Contractor, and (2) defects and deficiencies observed in the Work. The Architect will not be responsible for the Contractor's failure to perform the Work in accordance with the requirements of the Contract Documents. The Architect will not have control over or charge of and will not be responsible for acts or omissions of the Contractor, Subcontractors, or their agents or employees, or any other persons or entities performing portions of the Work.

§ 4.2.3.1 Owner shall be entitled to deduct from the Contract Sum amounts paid to the Architect, for additional services which may be charged by the Architect for additional site visits made necessary by the fault or neglect of the Contractor.

§ 4.2.4 COMMUNICATIONS FACILITATING CONTRACT ADMINISTRATION

Except as otherwise provided in the Contract Documents or when direct communications have been specially authorized, the Owner and Contractor shall endeavor to communicate with each other through the Architect about

AIA Document A201® – 2007. Copyright © 1911, 1915, 1918, 1925, 1937, 1951, 1958, 1961, 1963, 1966, 1970, 1976, 1987, 1997 and 2007 by The American Institute of Architects. All rights reserved. The "American Institute of Architects," "AIA," the AIA Logo, "A201," and "AIA Contract Documents" are registered trademarks and may not be used without permission. This document was produced by AIA software at 12:23:28 ET on 11/11/2020 under Order No.6115176972 which expires on 09/19/2021, is not for resale, is licensed for one-time use only, and may only be used in accordance with the AIA Contract Documents® Terms of Service. To report copyright violations, e-mail copyright@aia.org.
User Notes:

matters arising out of or relating to the Contract. Communications by and with the Architect's consultants shall be through the Architect. Communications by and with Subcontractors and material suppliers shall be through the Contractor. Communications by and with separate contractors shall be through the Owner.

§ 4.2.5 Based on the Architect's evaluations of the Contractor's Applications for Payment, the Architect will review and certify the amounts due the Contractor and will issue Certificates for Payment in such amounts.

§ 4.2.6 The Architect has authority to reject Work that does not conform to the Contract Documents. Whenever the Architect considers it necessary or advisable, the Architect will have authority to require inspection or testing of the Work in accordance with Sections 13.5.2 and 13.5.3, whether or not such Work is fabricated, installed or completed. However, neither this authority of the Architect nor a decision made in good faith either to exercise or not to exercise such authority shall give rise to a duty or responsibility of the Architect to the Contractor, Subcontractors, material and equipment suppliers, their agents or employees, or other persons or entities performing portions of the Work.

§ 4.2.7 The Architect will review and or take other appropriate action upon, the Contractor's submittals such as Shop Drawings, Product Data and Samples, but only for the limited purpose of reviewing the adequacy of the structural elements of the building and checking for conformance with information given and the design concept expressed in the Contract Documents. The Architect's action will be taken in accordance with the submittal schedule reviewed by the Architect or, in the absence of an approved submittal schedule, with reasonable promptness while allowing sufficient time in the Architect's professional judgment to permit adequate review. Review of such submittals is not conducted for the purpose of determining the accuracy and completeness of other details such as dimensions and quantities, or for substantiating instructions for installation or performance of equipment or systems, all of which remain the responsibility of the Contractor as required by the Contract Documents. The Architect's review of the Contractor's submittals shall not relieve the Contractor of the obligations under Sections 3.3, 3.5 and 3.12. The Architect's review shall not constitute approval of safety precautions or, unless otherwise specifically stated by the Architect, of any construction means, methods, techniques, sequences or procedures. The Architect's reviewed of a specific item shall not indicate approval of an assembly of which the item is a component. Should any local Government authorities require certification or correctness of any structural shop drawings by the Architect of record, the Architect will sign and certify the shop drawings only after the shop drawings have been signed and certified by the both the structural engineer and other professional engineer registered in the State of Maryland on behalf of the manufacturer, fabricator, Subcontractor, or Contractor. The cost for such additional engineering certification shall be borne by the Contractor.

§ 4.2.8 The Architect will prepare Change Orders and Construction Change Directives, and may authorize minor changes in the Work as provided in Section 7.4. The Architect will investigate and make determinations and recommendations regarding concealed and unknown conditions as provided in Section 3.7.4.

§ 4.2.9 The Architect will conduct inspections to determine the date or dates of Substantial Completion and the date of final completion; issue Certificates of Substantial Completion pursuant to Section 9.8; receive, review and forward to the Owner with comments, for the Owner's review and records, written warranties and related documents required by the Contract and assembled by the Contractor pursuant to Section 9.10; and issue a final Certificate for Payment pursuant to Section 9.10. Architect's inspection and issuance of a certificate for final payment and Owner's payment shall not relieve Contractor of responsibility for defects in the Work.

§ 4.2.10 If the Owner and Architect agree, the Architect will provide one or more project representatives to assist in carrying out the Architect's responsibilities at the site. The duties, responsibilities and limitations of authority of such project representatives shall be as set forth in an exhibit to be incorporated in the Contract Documents.

§ 4.2.11 The Architect will interpret and decide matters concerning performance under, and requirements of, the Contract Documents on written request of either the Owner or Contractor. The Architect's response to such requests will be made in writing within any time limits agreed upon or otherwise with reasonable promptness.

§ 4.2.12 Interpretations and decisions of the Architect will be consistent with the intent of, and reasonably inferable from, the Contract Documents and will be in writing or in the form of drawings. When making such interpretations and decisions, the Architect will endeavor to secure faithful performance by both Owner and Contractor, will not show partiality to either and will not be liable for results of interpretations or decisions rendered in good faith.

AIA Document A201® – 2007. Copyright © 1911, 1915, 1918, 1925, 1937, 1951, 1958, 1961, 1963, 1966, 1970, 1976, 1987, 1997 and 2007 by The American Institute of Architects. All rights reserved. The "American Institute of Architects," "AIA," the AIA Logo, "A201," and "AIA Contract Documents" are registered trademarks and may not be used without permission. This document was produced by AIA software at 12:23:28 ET on 11/11/2020 under Order No.6115176972 which expires on 09/19/2021, is not for resale, is licensed for one-time use only, and may only be used in accordance with the AIA Contract Documents® Terms of Service. To report copyright violations, e-mail copyright@aia.org.
User Notes:

§ 4.2.13 The Architect's decisions on matters relating to aesthetic effect will be final if consistent with the intent expressed in the Contract Documents.

§ 4.2.14 The Architect will review and respond to requests for information about the Contract Documents. The Architect's response to such requests will be made in writing within any time limits agreed upon or otherwise with reasonable promptness. If appropriate, the Architect will prepare and issue supplemental Drawings and Specifications in response to the requests for information.

ARTICLE 5 SUBCONTRACTORS

§ 5.1 DEFINITIONS

§ 5.1.1 A Subcontractor is a person or entity who has a direct contract with the Contractor to perform a portion of the Work at the site. The term "Subcontractor" is referred to throughout the Contract Documents as if singular in number and means a Subcontractor or an authorized representative of the Subcontractor. The term "Subcontractor" does not include a separate contractor or subcontractors of a separate contractor.

§ 5.1.2 A Sub-subcontractor is a person or entity who has a direct or indirect contract with a Subcontractor to perform a portion of the Work at the site. The term "Sub-subcontractor" is referred to throughout the Contract Documents as if singular in number and means a Sub-subcontractor or an authorized representative of the Sub-subcontractor.

§ 5.2 AWARD OF SUBCONTRACTS AND OTHER CONTRACTS FOR PORTIONS OF THE WORK

§ 5.2.1 Unless otherwise stated in the Contract Documents or the bidding requirements, the Contractor, as soon as practicable after award of the Contract, shall furnish in writing to the Owner through the Architect the names of persons or entities (including those who are to furnish materials or equipment fabricated to a special design) proposed for each principal portion of the Work. The Architect may reply within 14 days to the Contractor in writing stating (1) whether the Owner or the Architect has reasonable objection to any such proposed person or entity or (2) that the Architect requires additional time for review. Failure of the Owner or Architect to reply within the 14-day period shall constitute notice of no reasonable objection.

§ 5.2.2 The Contractor shall not contract or propose to contract with a proposed person, entity or subcontractor unless the Contractor is satisfied that such person, entity or Subcontractor is technically and financially qualified to perform the Work as a Subcontractor in accordance with the Contract Documents. The Contractor shall not Contract with any entity or persons to whom the Owner or Architect has made reasonable and timely objection. The Contractor shall not be required to contract with anyone to whom the Contractor has made reasonable objection.

§ 5.2.3 If the Owner or Architect has reasonable objection to a person or entity proposed by the Contractor, the Contractor shall propose another to whom the Owner or Architect has no reasonable objection. If the proposed but rejected Subcontractor was reasonably capable of performing the Work, the Contract Sum and Contract Time shall be increased or decreased by the difference, if any, occasioned by such change, and an appropriate Change Order shall be issued before commencement of the substitute Subcontractor's Work. However, no increase in the Contract Sum or Contract Time shall be allowed for such change unless the Contractor has acted promptly and responsively in submitting names as required.

§ 5.2.4 The Contractor shall not substitute a Subcontractor, person or entity previously selected if the Owner or Architect makes reasonable objection to such substitution.

§ 5.2.5 The Contractor shall not enter into any Subcontract, Contract agreement, purchase order or other arrangement for the furnishing of any portion of the materials, services, equipment or Work with any party or entity as such party or entity is an affiliated entity with which the Contractor has a direct or indirect ownership, control or interest unless such Agreement has been approved by the Owner after full disclosure in writing by the Contractor to the Owner of such affiliation or relationship and all details relating to the proposed arrangements.

§ 5.3 SUBCONTRACTUAL RELATIONS

§ 5.3.1 By appropriate agreement, written where legally required for validity, the Contractor shall require each Subcontractor, to the extent of the Work to be performed by the Subcontractor, to be bound to the Contractor by terms of the Contract Documents, and to assume toward the Contractor all the obligations and responsibilities, including the responsibility for safety of the Subcontractor's Work, which the Contractor, by these Documents, assumes toward the Owner and Architect. Each subcontract agreement shall preserve and protect the rights of the Owner and Architect

AIA Document A201® – 2007. Copyright © 1911, 1915, 1918, 1925, 1937, 1951, 1958, 1961, 1963, 1966, 1970, 1976, 1987, 1997 and 2007 by The American Institute of Architects. All rights reserved. The "American Institute of Architects," "AIA," the AIA Logo, "A201," and "AIA Contract Documents" are registered trademarks and may not be used without permission. This document was produced by AIA software at 12:23:28 ET on 11/11/2020 under Order No.6115176972 which expires on 09/19/2021, is not for resale, is licensed for one-time use only, and may only be used in accordance with the AIA Contract Documents® Terms of Service. To report copyright violations, e-mail copyright@aia.org.
User Notes: (1517250872)

under the Contract Documents with respect to the Work to be performed by the Subcontractor so that subcontracting thereof will not prejudice such rights, and shall allow to the Subcontractor, unless specifically provided otherwise in the subcontract agreement, the benefit of all rights, remedies and redress against the Contractor that the Contractor, by the Contract Documents, has against the Owner. Where appropriate, the Contractor shall require each Subcontractor to enter into similar agreements with Sub-subcontractors. The Contractor shall make available to each proposed Subcontractor, prior to the execution of the subcontract agreement, copies of the Contract Documents to which the Subcontractor will be bound, and, upon written request of the Subcontractor, identify to the Subcontractor terms and conditions of the proposed subcontract agreement that may be at variance with the Contract Documents. Subcontractors will similarly make copies of applicable portions of such documents available to their respective proposed Sub-subcontractors.

§ 5.3.2 Contractor shall not withhold sums earned by any Subcontractor on this Project by reason of obligations which may be owing to Contractor from Subcontractor on any other projects ("cross withholding"). Any such cross withholding shall be grounds for termination of Contractor or, in Owner's sole discretion, shall authorize the Owner to engage another Subcontractor to perform the Work at Contractor's expense including all damages and losses caused to Owner by such Subcontractor substitution.

§ 5.4 CONTINGENT ASSIGNMENT OF SUBCONTRACTS

§ 5.4.1 Each subcontract agreement for a portion of the Work is assigned by the Contractor to the Owner, provided that

.1 assignment is effective only after termination of the Contract by the Owner for cause pursuant to Section 14.2 and only for those subcontract agreements that the Owner accepts by notifying the Subcontractor and Contractor in writing; and

.2 assignment is subject to the prior rights of the surety, if any, obligated under bond relating to the Contract.

When the Owner accepts the assignment of a subcontract agreement, the Owner assumes the Contractor's rights and obligations under the subcontract.

§ 5.4.2 Upon such assignment, if the Work has been suspended for more than 30 days, the Subcontractor's compensation shall be equitably adjusted for increases in cost resulting from the suspension.

§ 5.4.3 Upon such assignment to the Owner under this Section 5.4, the Owner may further assign the subcontract to a successor contractor or other entity. If the Owner assigns the subcontract to a successor contractor or other entity, the Owner shall nevertheless remain legally responsible for all of the successor contractor's obligations under the subcontract.

ARTICLE 6 CONSTRUCTION BY OWNER OR BY SEPARATE CONTRACTORS

§ 6.1 OWNER'S RIGHT TO PERFORM CONSTRUCTION AND TO AWARD SEPARATE CONTRACTS

§ 6.1.1 The Owner reserves the right to and may perform construction or operations related to the Project with the Owner's own forces, and to award separate contracts in connection with other portions of the Project or other construction or operations on the site under Conditions of the Contract identical or substantially similar to these including those portions related to insurance and waiver of subrogation. If the Contractor claims that delay or additional cost is involved because of such action by the Owner, the Contractor shall make such Claim as provided in Article 15.

§ 6.1.2 When separate contracts are awarded for different portions of the Project or other construction or operations on the site, the term "Contractor" in the Contract Documents in each case shall mean the Contractor who executes each separate Owner-Contractor Agreement.

§ 6.1.3 The Owner shall provide for coordination of the activities of the Owner's own forces and of each separate contractor with the Work of the Contractor, who shall cooperate with them. The Contractor shall participate with other separate contractors and the Owner in reviewing their construction schedules. The Contractor shall make any revisions to the construction schedule deemed necessary after a joint review and mutual agreement. The construction schedules shall then constitute the schedules to be used by the Contractor, separate contractors and the Owner until subsequently revised.

AIA Document A201® – 2007. Copyright © 1911, 1915, 1918, 1925, 1937, 1951, 1958, 1961, 1963, 1966, 1970, 1976, 1987, 1997 and 2007 by The American Institute of Architects. All rights reserved. The "American Institute of Architects," "AIA," the AIA Logo, "A201," and "AIA Contract Documents" are registered trademarks and may not be used without permission. This document was produced by AIA software at 12:23:28 ET on 11/11/2020 under Order No.6115176972 which expires on 09/19/2021, is not for resale, is licensed for one-time use only, and may only be used in accordance with the AIA Contract Documents® Terms of Service. To report copyright violations, e-mail copyright@aia.org.
User Notes: (1517250872)

§ 6.1.4 Unless otherwise provided in the Contract Documents, when the Owner performs construction or operations related to the Project with the Owner's own forces, the Owner shall be deemed to be subject to the same obligations and to have the same rights that apply to the Contractor under the Conditions of the Contract, including, without excluding others, those stated in Article 3, this Article 6 and Articles 10, 11 and 12.

§ 6.2 MUTUAL RESPONSIBILITY

§ 6.2.1 The Contractor shall afford the Owner and separate contractors reasonable opportunity for introduction and storage of their materials and equipment and performance of their activities, and shall connect and coordinate the Contractor's construction and operations with theirs as required by the Contract Documents.

§ 6.2.2 If part of the Contractor's Work depends for proper execution or results upon construction or operations by the Owner or a separate contractor, the Contractor shall, prior to proceeding with that portion of the Work, promptly report to the Architect and Owner apparent discrepancies or defects in such other construction that would render it unsuitable for such proper execution and results. Failure of the Contractor so to report shall constitute an acknowledgment that the Owner's or separate contractor's completed or partially completed construction is fit and proper to receive the Contractor's Work, except as to defects not then reasonably discoverable.

§ 6.2.3 The Contractor shall reimburse the Owner for costs the Owner incurs that are payable to a separate contractor because of the Contractor's delays, improperly timed activities or defective construction. The Owner shall be responsible to the Contractor for costs the Contractor incurs because of a separate contractor's delays, improperly timed activities, damage to the Work or defective construction.

§ 6.2.4 The Contractor shall promptly remedy damage the Contractor causes to completed or partially completed construction or to property of the Owner or separate contractors as provided in Section 10.2.5.

§ 6.2.5 The Owner and each separate contractor shall have the same responsibilities for cutting and patching as are described for the Contractor in Section 3.14.

§ 6.3 OWNER'S RIGHT TO CLEAN UP

If a dispute arises among the Contractor, separate contractors and the Owner as to the responsibility under their respective contracts for maintaining the premises and surrounding area free from waste materials and rubbish, the Owner may clean up and the Architect will allocate the cost among those responsible.

ARTICLE 7 CHANGES IN THE WORK

§ 7.1 GENERAL

§ 7.1.1 Changes in the Work may be accomplished after execution of the Contract, and without invalidating the Contract, by Change Order, Construction Change Directive or order for a minor change in the Work, subject to the limitations stated in this Article 7 and elsewhere in the Contract Documents. The Contractor agrees that it will incorporate the provisions of Article 7 in its entirety into all agreements with lower tier Contractors. It is further understood and agreed that these Change Order pricing provisions, apply to all types of Contracts, Subcontracts and purchases. The Owner and Owner's accountant shall be afforded access to Contractor's records, books and correspondence, instructions, drawings, receipts, Subcontracts, purchase orders, vouchers and any other data relating to the Project as necessary to verify the cost of any change, including wages and benefits paid, for which compensation is sought under this Agreement.

§ 7.1.2 A Change Order shall be based upon agreement among the Owner, Contractor and Architect; a Construction Change Directive requires agreement by the Owner and Architect and may or may not be agreed to by the Contractor; an order for a minor change in the Work may be issued by the Architect alone. Verbal notification approving the Contractor to proceed with a change in the work shall be confirmed in a written format via, CCD, Change Order, Progress minutes, e-mail or other written correspondence and should be made as soon as practical.

§ 7.1.3 Changes in the Work shall be performed under applicable provisions of the Contract Documents, and the Contractor shall proceed promptly, unless otherwise provided in the Change Order, Construction Change Directive or order for a minor change in the Work. A Change Order or Construction Change Directive involving unit cost shall be equitably adjusted in accordance with 7.3.4.

AIA Document A201® – 2007. Copyright © 1911, 1915, 1918, 1925, 1937, 1951, 1958, 1961, 1963, 1966, 1970, 1976, 1987, 1997 and 2007 by The American Institute of Architects. All rights reserved. The "American Institute of Architects," "AIA," the AIA Logo, "A201," and "AIA Contract Documents" are registered trademarks and may not be used without permission. This document was produced by AIA software at 12:23:28 ET on 11/11/2020 under Order No.6115176972 which expires on 09/19/2021, is not for resale, is licensed for one-time use only, and may only be used in accordance with the AIA Contract Documents® Terms of Service. To report copyright violations, e-mail copyright@aia.org.
User Notes: (1517250872)

§ 7.2 CHANGE ORDERS

§ 7.2.1 A Change Order is a written instrument prepared by the Architect and signed by the Owner, Contractor and Architect stating their agreement upon all of the following:

.1 The change in the Work;

.2 The amount of the adjustment, if any, in the Contract Sum; and

.3 The extent of the adjustment, if any, in the Contract Time; and

.4 Comply with all requirements of 7.2.2 below and 7.3.4.

No Change Order shall exceed any of the limitations and requirements of the Contract Documents.

§ 7.2.2 The Contractor shall comply with the following regarding Changes:

(A) A Notice or Request for Change must comply with all of the following:

.1 specifically and in detail describe the nature and cause of the Claim; and

.2 specifically reference the detail(s) on the plans and the specification section(s) that are affected; and

.3 contain an estimate of the increase or decrease in the cost to the Owner; and

.4 include supporting documentation that satisfactorily justifies to the Owner overhead, profit, insurance, sales or payroll taxes and incorporate a detailed quantity survey of all Work added and deleted; and

.5 be submitted in a format acceptable to the Owner.

(B) Additive Changes must comply with the following Mark-Up schedule for Overhead, profit and bond:

If the Cost of the proposed change is $0.00 to $4,999.99, the total combined overhead, profit and bond must not exceed 20%.

If the Cost of the proposed change is $5,000.00 to $14,999.99, the combined overhead, profit and bond must not exceed 15%.

If the Cost of the proposed change is $15,000.00 to $24,999.99, the combined overhead, profit and bond must not exceed 10%.

If the Cost of the proposed change is $25,000.00 to $49,999.99, the combined overhead, profit and bond must not exceed 7%.

If the Cost of the proposed change is over $50,000.00, the combined overhead, profit and bond will be negotiated but will not exceed 5%, the cost of the bond shall be clearly indicated in the detailed proposal regardless of the proposed cost.

(C) The Contractors' markup of Subcontractor Work and supplier's material(s) shall not exceed 7% for changes up to $24,999.99 and the markup shall be negotiated for changes over $25,000.00 but shall not exceed 5% of the Subcontractor(s) cost of the Work.

(D) Overhead cost shall include all the general conditions, expenses, including but not limited to, all coordination, calculations, engineering, field and office supervision, field and office rent utilities, telephone and communications expenses, office supplies, clean-up, debris expenses, administration and preparation. When both additions and deletions are involved in any one change, the allowance for overhead, profit and bond shall be computed on the net increase, if any, with respect to the change.

(E) For decreases in the Work or credits, the Contract Amount shall be decreased 100% of the Scheduled Value of the deleted Work plus overhead, profit and bond. Contractor and Subcontractor(s) credits shall include credit for overhead, profit and Bond, in the same percentages allowed for additive changes in the above mark-up schedule:

(F) The Contractor's total charge to the Owner for the use of equipment owned in whole or in part by the Contractor, its Owners, directors, officers, shareholders, or affiliated or related persons or entities shall consider the rate agreed upon between the Contractor, Owner and Architect at the beginning of the project less operator and fuel. Reference materials such as "the AED Green Book" should be used to establish market rental rates for equipment. The following shall apply;

.1 The appropriate duration of hourly rate shall be calculated based on the entire duration the piece of equipment is on the FCPS site (e.g. if the equipment item has been on the project for 30 days or more the hourly rate shall be the monthly rental divided by 176 hours; if on the project for one week the hourly rental shall be the weekly rental divided by 40; if on the project for a day the hourly rental shall be the daily rental divided by 8; if brought to the project for the specific operation the minimal rental period shall apply.) Minimal rental durations will be considered for equipment rented for specific project purposes,

.2 The Contractor shall not invoice for delivery or removal of the equipment to or from the job site,

.3 In no event shall the total payment paid by the Owner on any such piece of equipment exceed fifty percent (50%) of its purchase price.

(G) Subcontractor(s) shall comply with the requirements specified above for the Contractor regarding Changes.

AIA Document A201® – 2007. Copyright © 1911, 1915, 1918, 1925, 1937, 1951, 1958, 1961, 1963, 1966, 1970, 1976, 1987, 1997 and 2007 by The American Institute of Architects. All rights reserved. The "American Institute of Architects," "AIA," the AIA Logo, "A201," and "AIA Contract Documents" are registered trademarks and may not be used without permission. This document was produced by AIA software at 12:23:28 ET on 11/11/2020 under Order No.6115176972 which expires on 09/19/2021, is not for resale, is licensed for one-time use only, and may only be used in accordance with the AIA Contract Documents® Terms of Service. To report copyright violations, e-mail copyright@aia.org.
User Notes: (1517250872)

§ 7.3 CONSTRUCTION CHANGE DIRECTIVES

§ 7.3.1 A Construction Change Directive is a written order prepared by the Architect and signed by the Owner and Architect, directing a change in the Work prior to agreement on adjustment, if any, in the Contract Sum or Contract Time, or both. The Owner may by Construction Change Directive, without invalidating the Contract, order changes in the Work within the general scope of the Contract consisting of additions, deletions or other revisions, the Contract Sum and Contract Time being adjusted accordingly.

§ 7.3.2 A Construction Change Directive shall be used in the absence of total agreement on the terms of a Change Order.

§ 7.3.3 If the Construction Change Directive provides for an adjustment to the Contract Sum, the adjustment shall not exceed any requirements listed in Article 7 including all sub-sections and shall be based on one of the following methods:

.1 Mutual acceptance of a lump sum properly itemized and supported by sufficient substantiating data to permit evaluation;

.2 Unit prices stated in the Contract Documents or subsequently agreed upon;

.3 Cost to be determined in a manner agreed upon by the parties and a mutually acceptable fixed or percentage fee; or

.4 As provided in Section 7.3.7.

§ 7.3.4 If unit prices are stated in the Contract Documents or subsequently agreed upon, and if quantities originally contemplated are materially changed in a proposed Change Order or Construction Change Directive so that application of such unit prices to quantities of Work proposed will cause substantial inequity to the Owner or Contractor, the applicable unit prices shall be equitably adjusted. Unit prices are all inclusive including cost of overhead profit, bond and insurance.

§ 7.3.5 Upon receipt of a Construction Change Directive, the Contractor shall promptly proceed with the change in the Work involved and advise the Architect of the Contractor's agreement or disagreement with the method, if any, provided in the Construction Change Directive for determining the proposed adjustment in the Contract Sum or Contract Time.

§ 7.3.6 A Construction Change Directive signed by the Contractor indicates the Contractor's agreement therewith, including adjustment in Contract Sum and Contract Time or the method for determining them. Such agreement shall be effective immediately and shall be recorded as a Change Order.

§ 7.3.7 If the Contractor does not respond promptly or disagrees with the method for adjustment in the Contract Sum, the Architect shall determine the method and the adjustment on the basis of reasonable expenditures and savings of those performing the Work attributable to the change, including, in case of an increase in the Contract Sum, an amount for overhead and profit as set forth in the Agreement, or if no such amount is set forth in the Agreement, a reasonable amount. In such case, and also under Section 7.3.3.3, the Contractor shall keep and present, in such form as the Architect may prescribe, an itemized accounting together with appropriate supporting data. Unless otherwise provided in the Contract Documents, costs for the purposes of this Section 7.3.7 shall be limited to the following:

.1 Wages for construction Workers, including supervisors, directly employed to perform the construction of the Work at the site. Unless otherwise agreed by Addendum to this Contract, labor burden shall be limited to: social security, old age and unemployment, Workmen's compensation, health and life insurance benefits, sick leave, holidays, military leave, vacation and pension and savings plan benefits;

.2 Costs of materials, supplies and equipment, including cost of transportation, whether incorporated or consumed;

.3 Rental costs of machinery and equipment, exclusive of hand tools, whether rented from the Contractor or others;

.4 Costs of premiums for all bonds and insurance, permit fees, and sales, use or similar taxes related to the Work; and

.5 Additional costs of supervision and field office personnel directly attributable to the change, provided, however, the Contractor shall provide an itemized breakdown showing quantities, unit costs, hours and rates of labor, and other costs and such detail as may be required to allow the reasonableness of cost to be established. Similar cost information covering Subcontractors' Work shall be included as a part of the Contractor's Proposal. Minimum charges for "handling" will not be acceptable. The allowable

AIA Document A201® – 2007. Copyright © 1911, 1915, 1918, 1925, 1937, 1951, 1958, 1961, 1963, 1966, 1970, 1976, 1987, 1997 and 2007 by The American Institute of Architects. All rights reserved. The "American Institute of Architects," "AIA," the AIA Logo, "A201," and "AIA Contract Documents" are registered trademarks and may not be used without permission. This document was produced by AIA software at 12:23:28 ET on 11/11/2020 under Order No.6115176972 which expires on 09/19/2021, is not for resale, is licensed for one-time use only, and may only be used in accordance with the AIA Contract Documents® Terms of Service. To report copyright violations, e-mail copyright@aia.org.
User Notes:

overhead and profit Mark-Ups to be included in the Total Cost to Owner shall be based on paragraph 7.2 and:

.1 In order to facilitate checking of quotations for extras or credits, all proposals, except those so minor that their propriety can be seen by inspection, shall be accompanied by a complete itemization of the cost including labor, materials and Subcontractors. Labor and materials shall be itemized in the manner prescribed above. Where major cost items are Subcontracts, they shall be itemized also. In no case will a charge involving over $500.00 be approved without such itemization.

.2 A Change Order must include each of the items listed in this Article 7. In the event there is no change in the Contract time or Contract amount, it must be noted that no such change is intended. A Change Order is all-inclusive, that is, a Change Order must indicate the change in Contract amount, including any overhead and profit. The Contractor cannot later request additional sums for a prior Change Order because it did not include overhead, profit, or similar items. If additional Contract time is indicated on the Change Order and the Contractor intends to claim any cost for time on any basis, the Change Order must include all additional costs, if any, associated with the additional time.

.3 Where both additions and credits are involved in any one Change Order the allowance of overhead and profit shall be figured on the basis of the net increase, if any.

§ 7.3.8 The amount of credit to be allowed by the Contractor to the Owner for a deletion or change that results in a net decrease in the Contract Sum shall be actual net cost as confirmed by the Architect and the credit shall be as required by Article 7 mark-up schedule. When both additions and credits covering related Work or substitutions are involved in a change, the allowance for overhead and profit shall be figured on the basis of net increase, if any, with respect to that change per the mark-up schedule.

§ 7.3.9 Pending final determination of the actual cost of a Construction Change Directive to the Owner, amounts not in dispute for such changes in the Work shall be included in Applications for Payment accompanied by a Change Order indicating the parties' agreement with part or all of such costs. For any portion of such costs that remains in dispute, a Claim may be made in accordance with Article 15.

§ 7.3.10 When the Owner and Contractor agree with a determination made by the Architect concerning the adjustments in the Contract Sum and Contract Time, or reach agreement upon the adjustments, such agreement shall be effective immediately and the Architect will prepare a Change Order otherwise, if Contractor is directed to proceed by Owner, the matter shall be considered a Claim under Article 15. Change Orders may be issued for all or any part of a Construction Change Directive.

§ 7.4 MINOR CHANGES IN THE WORK

The Architect with the consent of the Owner has authority to order minor changes in the Work not involving adjustment in the Contract Sum or extension of the Contract Time and not inconsistent with the intent of the Contract Documents. Such changes will be effected by written order signed by the Architect and shall be binding on the Owner and Contractor.

ARTICLE 8 TIME

§ 8.1 DEFINITIONS

§ 8.1.1 Unless otherwise provided, Contract Time is the period of time, including authorized adjustments, allotted in the Contract Documents for Substantial Completion of the Work.

§ 8.1.2 The date of commencement of the Work is the date established in the Agreement shall be fixed in a Notice to Proceed.

§ 8.1.3 The date of Substantial Completion is the date certified by the Architect in accordance with Section 9.8.

§ 8.1.4 The term "day" as used in the Contract Documents shall mean calendar day unless otherwise specifically defined.

AIA Document A201® – 2007. Copyright © 1911, 1915, 1918, 1925, 1937, 1951, 1958, 1961, 1963, 1966, 1970, 1976, 1987, 1997 and 2007 by The American Institute of Architects. All rights reserved. The "American Institute of Architects," "AIA," the AIA Logo, "A201," and "AIA Contract Documents" are registered trademarks and may not be used without permission. This document was produced by AIA software at 12:23:28 ET on 11/11/2020 under Order No.6115176972 which expires on 09/19/2021, is not for resale, is licensed for one-time use only, and may only be used in accordance with the AIA Contract Documents® Terms of Service. To report copyright violations, e-mail copyright@aia.org.
User Notes: (1517250872)

§ 8.2 PROGRESS AND COMPLETION

§ 8.2.1 Time limits stated in the Contract Documents are of the essence of the Contract. By executing the Agreement the Contractor confirms that the Contract Time is a reasonable period for performing the Work.

§ 8.2.2 The Contractor shall not knowingly, except by agreement or instruction of the Owner in writing, prematurely commence operations on the site or elsewhere prior to the effective date of insurance required by Article 11 to be furnished by the Contractor and Owner. The date of commencement of the Work shall not be changed by the effective date of such insurance.

§ 8.2.3 The Contractor shall proceed expeditiously with adequate forces and shall achieve Substantial Completion within the Contract Time.

§ 8.3 DELAYS AND EXTENSIONS OF TIME

§ 8.3.1 If the Contractor is delayed at any time in the commencement or progress of the Work by an act or neglect of the Owner or Architect, or of an employee of either, or of a separate contractor employed by the Owner; or by changes ordered in the Work; or by labor disputes, fire, unusual delay in deliveries, unavoidable casualties or other causes beyond the Contractor's control; or by delay authorized by the Owner pending mediation and with consent of the Owner; or by other causes that the Architect determines may justify delay, then the Contract Time shall be extended by Change Order for such reasonable time as the Architect may determine. Contractor waives any all rights to any increased payments for delay damages, whether by Change Order or otherwise, to include overhead, extended overhead, extended general conditions, or for any other delay-based amounts of any kind or nature, for any delay by reason of the events referred to this in this subparagraph or any other event of any kind or nature. Contractor's remedy is limited to an extension of time as set forth herein.

§ 8.3.2 Claims relating to time shall be made in accordance with applicable provisions of Article 15.

§ 8.3.3 Is deleted.

ARTICLE 9 PAYMENTS AND COMPLETION

§ 9.1 CONTRACT SUM

The Contract Sum is stated in the Agreement and, including authorized adjustments, is the total amount payable by the Owner to the Contractor for performance of the Work under the Contract Documents.

§ 9.2 SCHEDULE OF VALUES

§ 9.2.1 Where the Contract is based on a stipulated sum or Guaranteed Maximum Price, the Contractor shall submit to the Architect and Owner, before the first Application for Payment, a schedule of values allocating the entire Contract Sum to the various portions of the Work and prepared in such form and supported by such data to substantiate its accuracy as the Architect or Owner may require. This schedule, unless objected to by the Architect, shall be used as a basis for reviewing the Contractor's Applications for Payment. The Schedule of Values shall be revised from time to time as may be necessary and due to the issuance of Change Orders or Construction Change Directives, the Contractor shall revise the Schedule of Values as requested by the Architect or Owner. The owner reserves the right to request the contractor to provide additional detail substantiating the schedule of values.

§ 9.2.2 The Contractor shall include a line item in the schedule of values for production of project record documents. The minimum value established for the record documents must not be less than ½ of 1% of the total Contract Value including accepted alternates.

§ 9.3 APPLICATIONS FOR PAYMENT

§ 9.3.1 At least ten days before the date established for each progress payment, the Contractor shall submit to the Architect and Owner an itemized Application for Payment prepared in accordance with the schedule of values, if required under Section 9.2, for completed portions of the Work. Such application shall be notarized and supported by such data substantiating the Contractor's right to payment as the Owner or Architect may require, such as copies of requisitions from Subcontractors and material suppliers, and shall reflect retainage as provided for in the Contract Documents. Applications for Payment shall be based upon the Schedule of Values and shall be in a form and content satisfactory to the Owner. Each Application for Payment shall be accompanied by the following:

AIA Document A201® – 2007. Copyright © 1911, 1915, 1918, 1925, 1937, 1951, 1958, 1961, 1963, 1966, 1970, 1976, 1987, 1997 and 2007 by The American Institute of Architects. All rights reserved. The "American Institute of Architects," "AIA," the AIA Logo, "A201," and "AIA Contract Documents" are registered trademarks and may not be used without permission. This document was produced by AIA software at 12:23:28 ET on 11/11/2020 under Order No.6115176972 which expires on 09/19/2021, is not for resale, is licensed for one-time use only, and may only be used in accordance with the AIA Contract Documents® Terms of Service. To report copyright violations, e-mail copyright@aia.org.
User Notes:

(a) Contractor's application and Cost Certification Statement, AIA Forms 702, 703 and IAC/PSCP Form No. 306.4, with attachment "G Certified Minority Business Enterprise Participation Standard Monthly Contractor's Requisition for Payment (June 2008 or current form)", and;
(b) A statement from the Contractor that all items of construction for which payment is sought have been incorporated into the Project were properly stored in accordance with the Contract Documents, and;
(c) the Contractors and applicable Subcontractors release of liens and waivers of claim and such other documents that the Owner may require after discussion with the Contractor, and;
(d) such other documentation that the Owner, Construction Manager, Architect may reasonably require after discussion with Contractor.

§ 9.3.1.1 As provided in Section 7.3.9, such applications may include requests for payment on account of changes in the Work that have been properly authorized by Construction Change Directives, or by interim determinations of the Architect, but not yet included in Change Orders.

§ 9.3.1.2 Applications for Payment shall not include requests for payment for portions of the Work for which the Contractor does not intend to pay a Subcontractor or material supplier, unless such Work has been performed by others whom the Contractor intends to pay.

§ 9.3.2 Unless otherwise provided in the Contract Documents, payments shall be made on account of materials and equipment delivered and suitably stored at the site for subsequent incorporation in the Work. If approved in advance by the Owner, payment may similarly be made for materials and equipment suitably stored off the site at a location agreed upon in writing. Payment for materials and equipment stored on or off the site shall be conditioned upon compliance by the Contractor with procedures satisfactory to the Owner to establish the Owner's title to such materials and equipment or otherwise protect the Owner's interest, and shall include the costs of applicable insurance, storage and transportation to the site for such materials and equipment stored off the site.

§ 9.3.3 The Contractor warrants that title to all Work covered by an Application for Payment will pass to the Owner no later than the time of payment. The Contractor further warrants that upon submittal of an Application for Payment all Work for which Certificates for Payment have been previously issued and payments received from the Owner shall, to the best of the Contractor's knowledge, information and belief, be free and clear of liens, claims, security interests or encumbrances in favor of the Contractor, Subcontractors, material suppliers, or other persons or entities making a claim by reason of having provided labor, materials and equipment relating to the Work.

§ 9.4 CERTIFICATES FOR PAYMENT

§ 9.4.1 The Architect will, after receipt of the Contractor's Application for Payment, either issue to the Owner a Certificate for Payment, with a copy to the Contractor, for such amount as the Architect determines is properly due, or notify the Contractor and Owner in writing of the Architect's reasons for withholding certification in whole or in part as provided in Section 9.5.1.

§ 9.4.2 The issuance of a Certificate for Payment will constitute a representation by the Architect to the Owner, based on the Architect's evaluation of the Work and the data comprising the Application for Payment, that, to the best of the Architect's knowledge, information and belief, the Work has progressed to the point indicated and that the quality of the Work is in accordance with the Contract Documents. The foregoing representations are subject to an evaluation of the Work for conformance with the Contract Documents upon Substantial Completion, to results of subsequent tests and inspections, to correction of minor deviations from the Contract Documents prior to completion and to specific qualifications expressed by the Architect. The issuance of a Certificate for Payment will further constitute a representation that the Contractor is entitled to payment in the amount certified. However, the issuance of a Certificate for Payment will not be a representation that the Architect has (1) made exhaustive or continuous on-site inspections to check the quality or quantity of the Work, (2) reviewed construction means, methods, techniques, sequences or procedures, (3) reviewed copies of requisitions received from Subcontractors and material suppliers and other data requested by the Owner to substantiate the Contractor's right to payment, or (4) made examination to ascertain how or for what purpose the Contractor has used money previously paid on account of the Contract Sum.

§ 9.5 DECISIONS TO WITHHOLD CERTIFICATION

§ 9.5.1 The Architect may withhold a Certificate for Payment in whole or in part, to the extent reasonably necessary to protect the Owner, if in the Architect's opinion the representations to the Owner required by Section 9.4.2 cannot be made. If the Architect is unable to certify payment in the amount of the Application, the Architect will notify the

AIA Document A201® – 2007. Copyright © 1911, 1915, 1918, 1925, 1937, 1951, 1958, 1961, 1963, 1966, 1970, 1976, 1987, 1997 and 2007 by The American Institute of Architects. All rights reserved. The "American Institute of Architects," "AIA," the AIA Logo, "A201," and "AIA Contract Documents" are registered trademarks and may not be used without permission. This document was produced by AIA software at 12:23:28 ET on 11/11/2020 under Order No.6115176972 which expires on 09/19/2021, is not for resale, is licensed for one-time use only, and may only be used in accordance with the AIA Contract Documents® Terms of Service. To report copyright violations, e-mail copyright@aia.org.
User Notes:

Contractor and Owner as provided in Section 9.4.1. If the Contractor and Architect cannot agree on a revised amount, the Architect will promptly issue a Certificate for Payment for the amount for which the Architect is able to make such representations to the Owner. The Architect may also withhold a Certificate for Payment or, because of subsequently discovered evidence, may nullify the whole or a part of a Certificate for Payment previously issued, to such extent as may be necessary in the Architect's opinion to protect the Owner from loss for which the Contractor is responsible, including loss resulting from acts and omissions described in Section 3.3.2, because of

.1 defective Work not remedied;
.2 third party claims filed or reasonable evidence indicating probable filing of such claims unless security acceptable to the Owner is provided by the Contractor;
.3 failure of the Contractor to make payments properly to Subcontractors or for labor, materials or equipment;
.4 reasonable evidence that the Work cannot be completed for the unpaid balance of the Contract Sum;
.5 damage to the Owner or a separate contractor;
.6 reasonable evidence that the Work will not be completed within the Contract Time, and that the unpaid balance would not be adequate to cover actual or liquidated damages for the anticipated delay; or
.7 repeated failure to carry out the Work in accordance with the Contract Documents.

§ 9.5.2 When the above reasons for withholding certification are removed, certification will be made for amounts previously withheld after the contractor revises and resubmits a current application for payment including such amounts that were previously withheld.

§ 9.5.3 If the Architect withholds certification for payment under Section 9.5.1.3, the Owner may, at its sole option, issue joint checks to the Contractor and to any Subcontractor or material or equipment suppliers to whom the Contractor failed to make payment for Work properly performed or material or equipment suitably delivered. If the Owner makes payments by joint check, the Owner shall notify the Architect and the Architect will reflect such payment on the next Certificate for Payment.

§ 9.5.4 If the Contractor disputes any determination by the Architect or Owner with regard to any Applications for Payment, the Contractor shall nevertheless expeditiously continue to perform the Work and shall make claim as provided in Article 15.

§ 9.5.5 The Owner shall not be deemed to be in breach of this Contract by reason of the withholding of any payment pursuant to any provision of the Contract Documents provided the Architect has approved the Owner's action, or the Work for which payment is being withheld has been rejected by any Governmental authority.

§ 9.6 PROGRESS PAYMENTS

§ 9.6.1 After the Architect has issued a Certificate for Payment, the Owner shall make payment in the manner and within the time provided in the Contract Documents, and shall so notify the Architect.

§ 9.6.2 The Contractor shall pay each Subcontractor no later than seven days after receipt of payment from the Owner the amount to which the Subcontractor is entitled, reflecting percentages actually retained from payments to the Contractor on account of the Subcontractor's portion of the Work. The Contractor shall, by appropriate agreement with each Subcontractor, require each Subcontractor to make payments to Sub-subcontractors in a similar manner.

§ 9.6.3 The Architect will, on request, furnish to a Subcontractor, if practicable, information regarding percentages of completion or amounts applied for by the Contractor and action taken thereon by the Architect and Owner on account of portions of the Work done by such Subcontractor.

§ 9.6.4 The Owner has the right to request written evidence from the Contractor that the Contractor has properly paid Subcontractors and material and equipment suppliers amounts paid by the Owner to the Contractor for subcontracted Work. If the Contractor fails to furnish such evidence within seven days, the Owner shall have the right to contact Subcontractors to ascertain whether they have been properly paid. Neither the Owner nor Architect shall have an obligation to pay or to see to the payment of money to a Subcontractor, except as may otherwise be required by law.

§ 9.6.5 Contractor payments to material and equipment suppliers shall be treated in a manner similar to that provided in Sections 9.6.2, 9.6.3 and 9.6.4.

AIA Document A201® – 2007. Copyright © 1911, 1915, 1918, 1925, 1937, 1951, 1958, 1961, 1963, 1966, 1970, 1976, 1987, 1997 and 2007 by The American Institute of Architects. All rights reserved. The "American Institute of Architects," "AIA," the AIA Logo, "A201," and "AIA Contract Documents" are registered trademarks and may not be used without permission. This document was produced by AIA software at 12:23:28 ET on 11/11/2020 under Order No.6115176972 which expires on 09/19/2021, is not for resale, is licensed for one-time use only, and may only be used in accordance with the AIA Contract Documents® Terms of Service. To report copyright violations, e-mail copyright@aia.org.
User Notes:

§ 9.6.6 A Certificate for Payment, a progress payment, or partial or entire use or occupancy of the Project by the Owner shall not constitute acceptance of Work not in accordance with the Contract Documents.

§ 9.6.7 Unless the Contractor provides the Owner with a payment bond in the full penal sum of the Contract Sum, payments received by the Contractor for Work properly performed by Subcontractors and suppliers shall be held by the Contractor for those Subcontractors or suppliers who performed Work or furnished materials, or both, under contract with the Contractor for which payment was made by the Owner. Nothing contained herein shall require money to be placed in a separate account and not commingled with money of the Contractor, shall create any fiduciary liability or tort liability on the part of the Contractor for breach of trust or shall entitle any person or entity to an award of punitive damages against the Contractor for breach of the requirements of this provision.

§ 9.7 FAILURE OF PAYMENT

Subject to other provisions of the Contract Documents, if the Architect does not issue a Certificate for Payment, through no fault of the Contractor, within thirty days after receipt of the Contractor's Application for Payment, or if the Owner does not pay the Contractor within seven days after the date established in the Contract Documents the amount certified by the Architect, then the Contractor may, upon seven additional days' written notice to the Owner and Architect, stop the Work until payment of the amount owing has been received. The Contract Time shall be extended appropriately and the Contract Sum shall be increased by the amount of the Contractor's substantiated direct costs of shut-down. Article 9.7 shall not apply to Change Orders that have not received formal approval by the Board of Education of Frederick County, all such Change Orders shall not be included in Applications for Payment until the Contractor receives formal notification from the Owner that the Change Order has received formal approval by the Board of Education of Frederick County and the contractor has completed the Change Order work.

§ 9.8 SUBSTANTIAL COMPLETION

§ 9.8.1 Substantial Completion is the stage in the progress of the Work when the Work or designated portion thereof is sufficiently complete in accordance with the Contract Documents so that the Owner can occupy or utilize the Work for its intended use.

§ 9.8.2 When the Contractor considers that the Work, or a portion thereof which the Owner agrees to accept separately, is substantially complete, the Contractor shall prepare and submit to the Architect a comprehensive list of items to be completed or corrected prior to final payment. Failure to include an item on such list does not alter the responsibility of the Contractor to complete all Work in accordance with the Contract Documents.

§ 9.8.3 The comprehensive list of items to be completed or corrected ("Contractor's Punch List") prepared by the Contractor shall be submitted to the Owner and the Architect and the Owner shall be notified of inspections and be entitled to have an Owner's representative present at such inspections. All items that are disclosed during inspections not complying with the Contract Documents shall be added to the Contractor's Punch List and a copy of the Amended Punch List shall be submitted to the Owner and the Contractor. Any Certificate of Substantial Completion shall then be submitted making reference to the Punch List item, as either being completed to the Architect's satisfaction or shall fix a time within which the Contractor shall complete any remaining items. In the event the Contractor's Punch List is not completed by the date set forth in the Certificate of Substantial Completion, Owner has the option of deducting from balances due the Contractor an amount sufficient to compensate Owner for the cost of completing the Punch List. The amount to be deducted shall be determined in the sole discretion of Owner. Alternatively, Owner at its sole discretion may proceed to engage another Contractor to complete the Punch List Work with the cost thereof to include Owner's administrative costs, which costs shall be calculated in the sole discretion of the Owner, to be deducted from the amount retained and if the amount retained is insufficient, the Contractor is responsible to reimburse Owner the full amount of the uncovered cost. To the extent that multiple inspections may be required to determine whether the Work, or a designated portion thereof has attained substantial completion, the Owner shall be entitled to deduct from the Contract Sum any amounts which it must pay to the Architect for additional services for such additional inspections.

§ 9.8.4 When the Work or designated portion thereof including Record Documents & Maintenance Manuals are substantially complete, the Architect will prepare a Certificate of Substantial Completion that shall establish the date of Substantial Completion, shall establish responsibilities of the Owner and Contractor for security, maintenance, heat, utilities, damage to the Work and insurance, and shall fix the time within which the Contractor shall finish all items on the list accompanying the Certificate. Warranties required by the Contract Documents shall commence on the date of Substantial Completion of the Work provided the contractor has completed all other contractual requirements

AIA Document A201® – 2007. Copyright © 1911, 1915, 1918, 1925, 1937, 1951, 1958, 1961, 1963, 1966, 1970, 1976, 1987, 1997 and 2007 by The American Institute of Architects. All rights reserved. The "American Institute of Architects," "AIA," the AIA Logo, "A201," and "AIA Contract Documents" are registered trademarks and may not be used without permission. This document was produced by AIA software at 12:23:28 ET on 11/11/2020 under Order No.6115176972 which expires on 09/19/2021, is not for resale, is licensed for one-time use only, and may only be used in accordance with the AIA Contract Documents® Terms of Service. To report copyright violations, e-mail copyright@aia.org.
User Notes:

stipulated to begin the warranty period or designated portion thereof unless otherwise provided in the Certificate of Substantial Completion.

§ 9.8.5 The Certificate of Substantial Completion shall be submitted to the Owner and Contractor for their written acceptance of responsibilities assigned to them in such Certificate. Upon such acceptance and consent of surety, if any, the Owner shall make payment of retainage applying to such Work or designated portion thereof. Such payment shall be adjusted for Work that is incomplete or not in accordance with the requirements of the Contract Documents.

§ 9.9 PARTIAL OCCUPANCY OR USE

§ 9.9.1 The Owner may occupy or use any completed or partially completed portion of the Work at any stage when such portion is designated by separate agreement with the Contractor, provided such occupancy or use is consented to by the insurer as required under Section 11.3.1.5 and authorized by public authorities having jurisdiction over the Project. Such partial occupancy or use may commence whether or not the portion is substantially complete, provided the Owner and Contractor have accepted in writing the responsibilities assigned to each of them for payments, retainage, if any, security, maintenance, heat, utilities, damage to the Work and insurance, and have agreed in writing concerning the period for correction of the Work and commencement of warranties required by the Contract Documents. When the Contractor considers a portion substantially complete, the Contractor shall prepare and submit a list to the Architect as provided under Section 9.8.2. Consent of the Contractor to partial occupancy or use shall not be unreasonably withheld. The stage of the progress of the Work shall be determined by written agreement between the Owner and Contractor or, if no agreement is reached, by decision of the Architect.

§ 9.9.2 Immediately prior to such partial occupancy or use, the Owner, Contractor and Architect shall jointly inspect the area to be occupied or portion of the Work to be used in order to determine and record the condition of the Work.

§ 9.9.3 Unless otherwise agreed upon, partial occupancy or use of a portion or portions of the Work shall not constitute acceptance of Work not complying with the requirements of the Contract Documents.

§ 9.10 FINAL COMPLETION AND FINAL PAYMENT

§ 9.10.1 Upon receipt of the Contractor's written notice that the Work is ready for final inspection and acceptance and upon receipt of a final Application for Payment, the Architect will promptly make such inspection and, when the Architect finds the Work acceptable under the Contract Documents and the Contract fully performed, the Architect will promptly issue a final Certificate for Payment stating that to the best of the Architect's knowledge, information and belief, and on the basis of the Architect's on-site visits and inspections, the Work has been completed in accordance with terms and conditions of the Contract Documents and that the entire balance found to be due the Contractor and noted in the final Certificate is due and payable. The Architect's final Certificate for Payment will constitute a further representation that conditions listed in Section 9.10.2 as precedent to the Contractor's being entitled to final payment have been fulfilled.

§ 9.10.2 Neither retainage payments nor final payment shall become due until all documents required by the Contract Documents and Article 5 of AIA 101 including (a)Maintenance Manuals, (b) Record Documents, (c) Instructions and Demonstrations have been provided and the Contractor submits to the Architect (1) an affidavit that payrolls, bills for materials and equipment, and other indebtedness connected with the Work for which the Owner or the Owner's property might be responsible or encumbered (less amounts withheld by Owner) have been paid or otherwise satisfied, (2) a certificate evidencing that insurance required by the Contract Documents to remain in force after final payment is currently in effect and will not be canceled or allowed to expire until at least 30 days' prior written notice has been given to the Owner, (3) a written statement that the Contractor knows of no substantial reason that the insurance will not be renewable to cover the period required by the Contract Documents, (4) consent of surety, if any, to final payment and (5)other data establishing payment or satisfaction of obligations, such as receipts, releases and waivers of liens, claims, security interests or encumbrances arising out of the Contract, to the extent and in such form as may be designated by the Owner. If a Subcontractor refuses to furnish a release or waiver required by the Owner, the Contractor may furnish a bond satisfactory to the Owner to indemnify the Owner against such lien. If such lien remains unsatisfied after payments are made, the Contractor shall refund to the Owner all money that the Owner may be compelled to pay in discharging such lien, including all costs and reasonable attorneys' fees.

§ 9.10.3 If, after Substantial Completion of the Work, final completion thereof is materially delayed through no fault of the Contractor or by issuance of Change Orders affecting final completion, and the Architect so confirms, the Owner shall, upon application by the Contractor and certification by the Architect, and without terminating the

AIA Document A201® – 2007. Copyright © 1911, 1915, 1918, 1925, 1937, 1951, 1958, 1961, 1963, 1966, 1970, 1976, 1987, 1997 and 2007 by The American Institute of Architects. All rights reserved. The "American Institute of Architects," "AIA," the AIA Logo, "A201," and "AIA Contract Documents" are registered trademarks and may not be used without permission. This document was produced by AIA software at 12:23:28 ET on 11/11/2020 under Order No.6115176972 which expires on 09/19/2021, is not for resale, is licensed for one-time use only, and may only be used in accordance with the AIA Contract Documents® Terms of Service. To report copyright violations, e-mail copyright@aia.org.
User Notes: (1517250872)

Contract, make payment of the balance due for that portion of the Work fully completed and accepted. If the remaining balance for Work not fully completed or corrected is less than retainage stipulated in the Contract Documents, and if bonds have been furnished, the written consent of surety to payment of the balance due for that portion of the Work fully completed and accepted shall be submitted by the Contractor to the Architect prior to certification of such payment. Such payment shall be made under terms and conditions governing final payment, except that it shall not constitute a waiver of claims.

§ 9.10.4 The making of final payment shall constitute a waiver of Claims by the Owner except those arising from

- **.1** liens, Claims, security interests or encumbrances arising out of the Contract and unsettled;
- **.2** defects in the Work or failure of the Work to comply with the Contract Documents; or
- **.3** terms of special warranties required by the Contract Documents.

§ 9.10.5 Acceptance of final payment by the Contractor, a Subcontractor or material supplier shall constitute a waiver of claims by that payee except those previously made in writing and identified by that payee as unsettled at the time of final Application for Payment.

§ 9.10.6 Under no circumstances shall final payment by the Owner constitute a waiver of defects in construction or failure of the Work to otherwise comply with the Contract Documents.

ARTICLE 10 PROTECTION OF PERSONS AND PROPERTY

§ 10.1 SAFETY PRECAUTIONS AND PROGRAMS

The Contractor shall be responsible for initiating, maintaining and supervising all safety precautions and programs in connection with the performance of the Contract.

§ 10.2 SAFETY OF PERSONS AND PROPERTY

§ 10.2.1 The Contractor shall take reasonable precautions for safety of, and shall provide reasonable protection to prevent damage, injury or loss to

- **.1** employees on the Work and other persons who may be affected thereby;
- **.2** the Work and materials and equipment to be incorporated therein, whether in storage on or off the site, under care, custody or control of the Contractor or the Contractor's Subcontractors or Sub-subcontractors; and
- **.3** other property at the site or adjacent thereto, such as trees, shrubs, lawns, walks, pavements, roadways, structures and utilities not designated for removal, relocation or replacement in the course of construction.

§ 10.2.2 The Contractor shall comply with and give notices required by applicable laws, statutes, ordinances, codes, rules and regulations, and lawful orders of public authorities bearing on safety of persons or property or their protection from damage, injury or loss.

§ 10.2.3 The Contractor shall erect and maintain, as required by existing conditions and performance of the Contract, reasonable safeguards for safety and protection, including posting danger signs and other warnings against hazards, promulgating safety regulations and notifying owners and users of adjacent sites and utilities.

§ 10.2.4 When use or storage of explosives or other hazardous materials or equipment or unusual methods are necessary for execution of the Work, the Contractor shall give the Owner reasonable advance notice and exercise utmost care and carry on such activities under supervision of properly qualified personnel.

§ 10.2.4.1 If the Contract Documents require the Contractor to handle materials or substances that under certain circumstances may be designated as hazardous, the Contractor shall handle such materials in an appropriate manner and shall defend, indemnify, and hold Owner and Architect harmless from and against all claims, liabilities, suits, losses and damages arising out of or relating to such materials.

§ 10.2.5 The Contractor shall promptly remedy damage and loss (other than damage or loss insured under property insurance required by the Contract Documents) to property referred to in Sections 10.2.1.2 and 10.2.1.3 caused in whole or in part by the Contractor, a Subcontractor, a Sub-subcontractor, or anyone directly or indirectly employed by any of them, or by anyone for whose acts they may be liable and for which the Contractor is responsible under Sections 10.2.1.2 and 10.2.1.3, except damage or loss attributable to acts or omissions of the Owner or Architect or anyone

AIA Document A201® – 2007. Copyright © 1911, 1915, 1918, 1925, 1937, 1951, 1958, 1961, 1963, 1966, 1970, 1976, 1987, 1997 and 2007 by The American Institute of Architects. All rights reserved. The "American Institute of Architects," "AIA," the AIA Logo, "A201," and "AIA Contract Documents" are registered trademarks and may not be used without permission. This document was produced by AIA software at 12:23:28 ET on 11/11/2020 under Order No.6115176972 which expires on 09/19/2021, is not for resale, is licensed for one-time use only, and may only be used in accordance with the AIA Contract Documents® Terms of Service. To report copyright violations, e-mail copyright@aia.org.
User Notes:

directly or indirectly employed by either of them, or by anyone for whose acts either of them may be liable, and not attributable to the fault or negligence of the Contractor. The foregoing obligations of the Contractor are in addition to the Contractor's obligations under Section 3.18.

§ 10.2.6 The Contractor shall designate a responsible member of the Contractor's organization at the site whose duty shall be the prevention of accidents. This person shall be the Contractor's superintendent unless otherwise designated by the Contractor in writing to the Owner and Architect.

§ 10.2.7 The Contractor shall not permit any part of the construction or site to be loaded so as to cause damage or create an unsafe condition.

§ 10.2.8 INJURY OR DAMAGE TO PERSON OR PROPERTY

If either party suffers injury or damage to person or property because of an act or omission of the other party, or of others for whose acts such party is legally responsible, written notice of such injury or damage, whether or not insured, shall be given to the other party within a reasonable time not exceeding 21 days after discovery. The notice shall provide sufficient detail to enable the other party to investigate the matter.

§ 10.3 HAZARDOUS MATERIALS

§ 10.3.1 The Contractor is responsible for compliance with any requirements included in the Contract Documents regarding hazardous materials. If the Contractor encounters a hazardous material or substance not addressed in the Contract Documents and if reasonable precautions will be inadequate to prevent foreseeable bodily injury or death to persons resulting from a material or substance, including but not limited to asbestos or polychlorinated biphenyl (PCB), encountered on the site by the Contractor, the Contractor shall, upon recognizing the condition, immediately stop Work in the affected area and report the condition to the Owner and Architect in writing.

§ 10.3.2 Upon receipt of the Contractor's written notice, the Owner shall obtain the services of a licensed laboratory to verify the presence or absence of the material or substance reported by the Contractor and, in the event such material or substance is found to be present, to cause it to be rendered harmless. Unless otherwise required by the Contract Documents, the Owner shall furnish in writing to the Contractor and Architect the names and qualifications of persons or entities who are to perform tests verifying the presence or absence of such material or substance or who are to perform the task of removal or safe containment of such material or substance. The Contractor and the Architect will promptly reply to the Owner in writing stating whether or not either has reasonable objection to the persons or entities proposed by the Owner. If either the Contractor or Architect has an objection to a person or entity proposed by the Owner, the Owner shall propose another to whom the Contractor and the Architect have no reasonable objection. When the material or substance has been rendered harmless, Work in the affected area shall resume upon written agreement of the Owner and Contractor. By Change Order, the Contract Time shall be extended appropriately and the Contract Sum shall be increased in the amount of the Contractor's reasonable additional costs of shut-down, delay and start-up.

§ 10.3.3 To the fullest extent permitted by law, the Owner shall indemnify and hold harmless the Contractor, Subcontractors, Architect, Architect's consultants and agents and employees of any of them from and against claims, damages, losses and expenses, including but not limited to attorneys' fees, arising out of or resulting from performance of the Work in the affected area if in fact the material or substance presents the risk of bodily injury or death as described in Section 10.3.1 and has not been rendered harmless, provided that such claim, damage, loss or expense is attributable to bodily injury, sickness, disease or death, or to injury to or destruction of tangible property (other than the Work itself), except to the extent that such damage, loss or expense is due to the fault or negligence of the party seeking indemnity.

§ 10.3.4 The Owner shall not be responsible under this Section 10.3 for materials or substances the Contractor brings to the site unless such materials or substances are required by the Contract Documents. The Owner shall be responsible for materials or substances required by the Contract Documents, except to the extent of the Contractor's fault or negligence in the use and handling of such materials or substances.

§ 10.3.5 The Contractor shall indemnify the Owner for the cost and expense the Owner incurs (1) for remediation of a material or substance the Contractor brings to the site and negligently handles, or (2) where the Contractor fails to perform its obligations under Section 10.3.1, except to the extent that the cost and expense are due to the Owner's fault or negligence.

AIA Document A201® – 2007. Copyright © 1911, 1915, 1918, 1925, 1937, 1951, 1958, 1961, 1963, 1966, 1970, 1976, 1987, 1997 and 2007 by The American Institute of Architects. All rights reserved. The "American Institute of Architects," "AIA," the AIA Logo, "A201," and "AIA Contract Documents" are registered trademarks and may not be used without permission. This document was produced by AIA software at 12:23:28 ET on 11/11/2020 under Order No.6115176972 which expires on 09/19/2021, is not for resale, is licensed for one-time use only, and may only be used in accordance with the AIA Contract Documents® Terms of Service. To report copyright violations, e-mail copyright@aia.org.
User Notes:

§ 10.3.6 If, without negligence on the part of the Contractor, the Contractor is held liable by a government agency for the cost of remediation of a hazardous material or substance solely by reason of performing Work as required by the Contract Documents, the Owner shall indemnify the Contractor for all cost and expense thereby incurred.

§ 10.4 EMERGENCIES

In an emergency affecting safety of persons or property, the Contractor shall act, at the Contractor's discretion, to prevent threatened damage, injury or loss. Additional compensation or extension of time claimed by the Contractor on account of an emergency shall be determined as provided in Article 15 and Article 7.

ARTICLE 11 INSURANCE AND BONDS

§ 11.1 CONTRACTOR'S LIABILITY INSURANCE

§ 11.1.1 The Contractor shall purchase from and maintain in a company or companies lawfully authorized to do business in the jurisdiction in which the Project is located such insurance as will protect the Contractor from claims set forth below which may arise out of or result from the Contractor's operations and completed operations under the Contract and for which the Contractor may be legally liable, whether such operations be by the Contractor or by a Subcontractor or by anyone directly or indirectly employed by any of them, or by anyone for whose acts any of them may be liable:

- **.1** Claims under workers' compensation, disability benefit and other similar employee benefit acts that are applicable to the Work to be performed;
- **.2** Claims for damages because of bodily injury, occupational sickness or disease, or death of the Contractor's employees;
- **.3** Claims for damages because of bodily injury, sickness or disease, or death of any person other than the Contractor's employees;
- **.4** Claims for damages insured by usual personal injury liability coverage;
- **.5** Claims for damages, other than to the Work itself, because of injury to or destruction of tangible property, including loss of use resulting therefrom;
- **.6** Claims for damages because of bodily injury, death of a person or property damage arising out of ownership, maintenance or use of a motor vehicle;
- **.7** Claims for bodily injury or property damage arising out of completed operations; and
- **.8** Claims involving contractual liability insurance applicable to the Contractor's obligations under Section 3.18.

§ 11.1.2 The insurance required by Section 11.1.1 shall be written for not less than limits of liability specified in the Contract Documents or required by law, whichever coverage is greater. Coverages, whether written on an occurrence or claims-made basis, shall be maintained without interruption from the date of commencement of the Work until the date of final payment and termination of any coverage required to be maintained after final payment, and, with respect to the Contractor's completed operations coverage, until the expiration of the period for correction of Work or for such other period for maintenance of completed operations coverage as specified in the Contract Documents.

§ 11.1.3 Certificates of insurance acceptable to the Owner shall be filed with the Owner prior to commencement of the Work and thereafter upon renewal or replacement of each required policy of insurance. These certificates and the insurance policies required by this Section 11.1 shall contain a provision that coverages afforded under the policies will not be canceled or allowed to expire until at least 30 days' prior written notice has been given to the Owner. An additional certificate evidencing continuation of liability coverage, including coverage for completed operations, shall be submitted with the final Application for Payment as required by Section 9.10.2 and thereafter upon renewal or replacement of such coverage until the expiration of the time required by Section 11.1.2. Information concerning reduction of coverage on account of revised limits or claims paid under the General Aggregate, or both, shall be furnished by the Contractor with reasonable promptness.

§ 11.1.4 The Contractor shall cause the commercial liability coverage required by the Contract Documents to include (1) the Owner, the Architect and the Architect's consultants as additional insureds for claims caused in whole or in part by the Contractor's negligent acts or omissions during the Contractor's operations; and (2) the Owner as an additional insured for claims caused in whole or in part by the Contractor's negligent acts or omissions during the Contractor's completed operations.

AIA Document A201® – 2007. Copyright © 1911, 1915, 1918, 1925, 1937, 1951, 1958, 1961, 1963, 1966, 1970, 1976, 1987, 1997 and 2007 by The American Institute of Architects. All rights reserved. The "American Institute of Architects," "AIA," the AIA Logo, "A201," and "AIA Contract Documents" are registered trademarks and may not be used without permission. This document was produced by AIA software at 12:23:28 ET on 11/11/2020 under Order No.6115176972 which expires on 09/19/2021, is not for resale, is licensed for one-time use only, and may only be used in accordance with the AIA Contract Documents® Terms of Service. To report copyright violations, e-mail copyright@aia.org.
User Notes: (1517250872)

§ 11.2 OWNER'S LIABILITY INSURANCE
The Owner shall be responsible for purchasing and maintaining the Owner's usual liability insurance.

§ 11.3 PROPERTY INSURANCE
§ 11.3.1 FCPS shall purchase and maintain, in a company or companies lawfully authorized to do business in the jurisdiction in which the Project is located, property insurance written on a builder's risk "all-risk" or equivalent policy form in the amount of the initial Contract Sum, plus value of subsequent Contract Modifications and cost of materials supplied or installed by others, comprising total value for the entire Project at the site on a replacement cost basis with deductibles. Such property insurance shall be maintained, unless otherwise provided in the Contract Documents or otherwise agreed in writing by all persons and entities who are beneficiaries of such insurance, until final payment has been made as provided in Section 9.10 or until no person or entity other than the Owner has an insurable interest in the property required by this Section 11.3 to be covered, whichever is later. This insurance shall include interests of the Owner, the Contractor, Subcontractors and Sub-subcontractors in the Project.

§ 11.3.1.1 Property insurance shall be on an "all-risk" or equivalent policy form and shall include, without limitation, insurance against the perils of fire (with extended coverage) and physical loss or damage including, without duplication of coverage, theft, vandalism, malicious mischief, collapse, earthquake, flood, windstorm, falsework, testing and startup, temporary buildings and debris removal including demolition occasioned by enforcement of any applicable legal requirements, and shall cover reasonable compensation for Architect's and Contractor's services and expenses required as a result of such insured loss.

§ 11.3.1.2 Is Deleted.

§ 11.3.1.3 If the property insurance requires deductibles, the Owner shall pay costs not covered because of such deductibles.

§ 11.3.1.4 This property insurance shall cover portions of the Work stored off the site, and also portions of the Work in transit.

§ 11.3.1.5 Partial occupancy or use in accordance with Section 9.9 shall not commence until the insurance company or companies providing property insurance have consented to such partial occupancy or use by endorsement or otherwise. The Owner and the Contractor shall take reasonable steps to obtain consent of the insurance company or companies and shall, without mutual written consent, take no action with respect to partial occupancy or use that would cause cancellation, lapse or reduction of insurance.

§ 11.3.2 BOILER AND MACHINERY INSURANCE
The Owner shall purchase and maintain boiler and machinery insurance required by the Contract Documents or by law, which shall specifically cover such insured objects during installation and until final acceptance by the Owner; this insurance shall include interests of the Owner, Contractor, Subcontractors and Sub-subcontractors in the Work, and the Owner and Contractor shall be named insureds.

§ 11.3.3 LOSS OF USE INSURANCE
The Owner, at the Owner's option, may purchase and maintain such insurance as will insure the Owner against loss of use of the Owner's property due to fire or other hazards, however caused.
§ 11.3.4 If the Contractor requests in writing that insurance for risks other than those described herein or other special causes of loss be included in the property insurance policy, the Owner shall, if possible, include such insurance, and the cost thereof shall be charged to the Contractor by appropriate Change Order.

§ 11.3.5 If during the Project construction period the Owner insures properties, real or personal or both, at or adjacent to the site by property insurance under policies separate from those insuring the Project, or if after final payment property insurance is to be provided on the completed Project through a policy or policies other than those insuring the Project during the construction period, the Owner shall waive all rights in accordance with the terms of Section 11.3.7 for damages caused by fire or other causes of loss covered by this separate property insurance. All separate policies shall provide this waiver of subrogation by endorsement or otherwise.

§ 11.3.6 Before an exposure to loss may occur, the Owner shall file with the Contractor a copy of each policy that includes insurance coverages required by this Section 11.3. Each policy shall contain all generally applicable

AIA Document A201® – 2007. Copyright © 1911, 1915, 1918, 1925, 1937, 1951, 1958, 1961, 1963, 1966, 1970, 1976, 1987, 1997 and 2007 by The American Institute of Architects. All rights reserved. The "American Institute of Architects," "AIA," the AIA Logo, "A201," and "AIA Contract Documents" are registered trademarks and may not be used without permission. This document was produced by AIA software at 12:23:28 ET on 11/11/2020 under Order No.6115176972 which expires on 09/19/2021, is not for resale, is licensed for one-time use only, and may only be used in accordance with the AIA Contract Documents® Terms of Service. To report copyright violations, e-mail copyright@aia.org.
User Notes:

conditions, definitions, exclusions and endorsements related to this Project. Each policy shall contain a provision that the policy will not be canceled or allowed to expire, and that its limits will not be reduced, until at least 30 days' prior written notice has been given to the Contractor.

§ 11.3.7 WAIVERS OF SUBROGATION

The Owner and Contractor waive all rights against (1) each other and any of their subcontractors, sub-subcontractors, agents and employees, each of the other, and (2) the Architect, Architect's consultants, separate contractors described in Article 6, if any, and any of their subcontractors, sub-subcontractors, agents and employees, for damages caused by fire or other causes of loss to the extent covered by property insurance obtained pursuant to this Section 11.3 or other property insurance applicable to the Work, except such rights as they have to proceeds of such insurance held by the Owner as fiduciary. The Owner or Contractor, as appropriate, shall require of the Architect, Architect's consultants, separate contractors described in Article 6, if any, and the subcontractors, sub-subcontractors, agents and employees of any of them, by appropriate agreements, written where legally required for validity, similar waivers each in favor of other parties enumerated herein. The policies shall provide such waivers of subrogation by endorsement or otherwise. A waiver of subrogation shall be effective as to a person or entity even though that person or entity would otherwise have a duty of indemnification, contractual or otherwise, did not pay the insurance premium directly or indirectly, and whether or not the person or entity had an insurable interest in the property damaged.

§ 11.3.8 A loss insured under the Owner's property insurance shall be adjusted by the Owner as fiduciary and made payable to the Owner as fiduciary for the insureds, as their interests may appear, subject to requirements of any applicable mortgagee clause and of Section 11.3.10. The Contractor shall pay Subcontractors their just shares of insurance proceeds received by the Contractor, and by appropriate agreements, written where legally required for validity, shall require Subcontractors to make payments to their Sub-subcontractors in similar manner.

§ 11.3.9 If required in writing by a party in interest, the Owner as fiduciary shall, upon occurrence of an insured loss, give bond for proper performance of the Owner's duties. The cost of required bonds shall be charged against proceeds received as fiduciary. The Owner shall deposit in a separate account proceeds so received, which the Owner shall distribute in accordance with such agreement as the parties in interest may reach, or as determined in accordance with the method of binding dispute resolution selected in the Agreement between the Owner and Contractor. If after such loss no other special agreement is made and unless the Owner terminates the Contract for convenience, replacement of damaged property shall be performed by the Contractor after notification of a Change in the Work in accordance with Article 7.

§ 11.3.10 The Owner as fiduciary shall have power to adjust and settle a loss with insurers unless one of the parties in interest shall object in writing within five days after occurrence of loss to the Owner's exercise of this power; if such objection is made, the dispute shall be resolved in the manner as required this by Agreement. No decision of the Architect shall be required.

§ 11.4 PERFORMANCE BOND AND PAYMENT BOND

§ 11.4.1 The Owner shall have the right to require the Contractor to furnish bonds covering faithful performance of the Contract and payment of obligations arising thereunder as stipulated in bidding requirements or specifically required in the Contract Documents on the date of execution of the Contract.

§ 11.4.2 Upon the request of any person or entity appearing to be a potential beneficiary of bonds covering payment of obligations arising under the Contract, the Contractor shall promptly furnish a copy of the bonds or shall authorize a copy to be furnished.

ARTICLE 12 UNCOVERING AND CORRECTION OF WORK

§ 12.1 UNCOVERING OF WORK

§ 12.1.1 If a portion of the Work is covered contrary to the Architect's request or to requirements specifically expressed in the Contract Documents, it must, if requested in writing by the Architect, be uncovered for the Architect's examination and be replaced at the Contractor's expense without change in the Contract Time.

§ 12.1.2 If a portion of the Work has been covered that the Architect has not specifically requested to examine prior to its being covered, the Architect may request to see such Work and it shall be uncovered by the Contractor. If such Work is in accordance with the Contract Documents, costs of uncovering and replacement shall, by appropriate Change Order, be at the Owner's expense. If Work is not in accordance with the Contract Documents, such costs and

AIA Document A201® – 2007. Copyright © 1911, 1915, 1918, 1925, 1937, 1951, 1958, 1961, 1963, 1966, 1970, 1976, 1987, 1997 and 2007 by The American Institute of Architects. All rights reserved. The "American Institute of Architects," "AIA," the AIA Logo, "A201," and "AIA Contract Documents" are registered trademarks and may not be used without permission. This document was produced by AIA software at 12:23:28 ET on 11/11/2020 under Order No.6115176972 which expires on 09/19/2021, is not for resale, is licensed for one-time use only, and may only be used in accordance with the AIA Contract Documents® Terms of Service. To report copyright violations, e-mail copyright@aia.org.
User Notes: (1517250872)

the cost of correction shall be at the Contractor's expense unless the condition was caused by the Owner or a separate contractor in which event the Owner shall be responsible for payment of such costs. The cost to repair nonconforming work shall be considered a latent defect and the contractor responsible for the work or as appropriate the damage to the work shall be responsible for the cost to make repairs to said work and return the uncovered work to the condition before the work was uncovered.

§ 12.2 CORRECTION OF WORK

§ 12.2.1 BEFORE OR AFTER SUBSTANTIAL COMPLETION

The Contractor and its surety shall have the right to remedy any defects in the Work on materials which shall appear within a period of two (2) year from the date of Substantial Completion. Upon written notice from the Owner, the Contractor and surety shall promptly provide said remedy after notice from the Owner. If said remedy is not promptly provided, the Owner shall have the right to correct said defects and charge the Contractor and its surety for the same.

§ 12.2.2 AFTER SUBSTANTIAL COMPLETION

§ 12.2.2.1 In addition to the Contractor's obligations under Section 3.5, if, within two-years after the date of Substantial Completion of the Work or designated portion thereof or after the date for commencement of warranties established under Section 9.9.1, or by terms of an applicable special warranty required by the Contract Documents, any of the Work is found to be not in accordance with the requirements of the Contract Documents, the Contractor shall correct it promptly after receipt of written notice from the Owner to do so unless the Owner has previously given the Contractor a written acceptance of such condition. The Owner shall give such notice promptly after discovery of the condition. During the two-year period for correction of Work, if the Owner fails to notify the Contractor and give the Contractor an opportunity to make the correction, the Owner waives the rights to require correction by the Contractor and to make a claim for breach of warranty. If the Contractor fails to correct nonconforming Work within five working days after receipt of notice from the Owner or Architect, the Owner may correct it in accordance with Section 2.4. If the Contractor does not proceed with correction of such nonconforming Work within five working days fixed by written notice from the Architect the Owner may remove it and store the salvable materials or equipment at the Contractor's expense. If the Contractor does not pay costs of such removal and storage within three days after written notice, the Owner may upon ten additional days' written notice sell such materials and equipment at auction or at private sale and shall account for the proceeds thereof, after deducting costs and damages that should have been borne by the Contractor, including compensation for the Owner's and Architect's services and expenses made necessary thereby. If such proceeds of sale do not cover costs which the Contractor should have borne, the Contract Sum shall be reduced by the deficiency. If payments then or thereafter due the Contractor are not sufficient to cover such amount, the Contractor shall pay the difference to the Owner.

§ 12.2.2.2 The two-year period for correction of Work shall be extended with respect to portions of Work first performed after Substantial Completion by the period of time between Substantial Completion and the actual completion of that portion of the Work.

§ 12.2.2.3 The two-year period for correction of Work shall not be extended by corrective Work performed by the Contractor pursuant to this Section 12.2.

§ 12.2.3 The Contractor shall remove from the site portions of the Work that are not in accordance with the requirements of the Contract Documents and are neither corrected by the Contractor nor accepted by the Owner.

§ 12.2.4 The Contractor shall bear the cost of correcting destroyed or damaged construction, whether completed or partially completed, of the Owner or separate contractors caused by the Contractor's correction or removal of Work that is not in accordance with the requirements of the Contract Documents.

§ 12.2.5 Nothing contained in this Section 12.2 shall be construed to establish a period of limitation with respect to other obligations the Contractor has under the Contract Documents. Establishment of the two-year period for correction of Work as described in Section 12.2.2 relates only to the specific obligation of the Contractor to correct the Work, and has no relationship to the time within which the obligation to comply with the Contract Documents may be sought to be enforced, nor to the time within which proceedings may be commenced to establish the Contractor's liability with respect to the Contractor's obligations other than specifically to correct the Work.

AIA Document A201® – 2007. Copyright © 1911, 1915, 1918, 1925, 1937, 1951, 1958, 1961, 1963, 1966, 1970, 1976, 1987, 1997 and 2007 by The American Institute of Architects. All rights reserved. The "American Institute of Architects," "AIA," the AIA Logo, "A201," and "AIA Contract Documents" are registered trademarks and may not be used without permission. This document was produced by AIA software at 12:23:28 ET on 11/11/2020 under Order No.6115176972 which expires on 09/19/2021, is not for resale, is licensed for one-time use only, and may only be used in accordance with the AIA Contract Documents® Terms of Service. To report copyright violations, e-mail copyright@aia.org.
User Notes: (1517250872)

§ 12.3 ACCEPTANCE OF NONCONFORMING WORK

If the Owner prefers to accept Work that is not in accordance with the requirements of the Contract Documents, the Owner may do so instead of requiring its removal and correction, in which case the Contract Sum will be reduced as appropriate and equitable. Such adjustment shall be effected whether or not final payment has been made.

ARTICLE 13 MISCELLANEOUS PROVISIONS

§ 13.1 GOVERNING LAW

The Contract shall be governed by the law of The State of Maryland.

§ 13.2 SUCCESSORS AND ASSIGNS

§ 13.2.1 The Owner and Contractor respectively bind themselves, their partners, successors, assigns and legal representatives to covenants, agreements and obligations contained in the Contract Documents. If either party attempts to make such an assignment without such consent, that party shall nevertheless remain legally responsible for all obligations under the Contract.

§ 13.2.2 Is Deleted.

§ 13.3 WRITTEN NOTICE

Written notice shall be deemed to have been duly served if delivered in person to the individual, to a member of the firm or entity, or to an officer of the corporation for which it was intended; or if delivered at, or sent by registered or certified mail or by courier service providing proof of delivery to, the last business address known to the party giving notice.

§ 13.4 RIGHTS AND REMEDIES

§ 13.4.1 Duties and obligations imposed by the Contract Documents and rights and remedies available thereunder shall be in addition to and not a limitation of duties, obligations, rights and remedies otherwise imposed or available by law.

§ 13.4.2 No action or failure to act by the Owner, Architect or Contractor shall constitute a waiver of a right or duty afforded them under the Contract, nor shall such action or failure to act constitute approval of or acquiescence in a breach there under, except as may be specifically agreed in writing.

§ 13.5 TESTS AND INSPECTIONS

§ 13.5.1 Tests, inspections and approvals of portions of the Work shall be made as required by the Contract Documents and by applicable laws, statutes, ordinances, codes, rules and regulations or lawful orders of public authorities. Unless otherwise provided, the Contractor shall make arrangements for such tests, inspections and approvals with an independent testing laboratory or entity acceptable to the Owner, or with the appropriate public authority, and shall bear all related costs of tests, inspections and approvals. The Contractor shall give the Architect timely notice of when and where tests and inspections are to be made so that the Architect may be present for such procedures. The Owner shall bear costs of (1) tests, inspections or approvals that do not become requirements until after bids are received or negotiations concluded, and (2) tests, inspections or approvals where building codes or applicable laws or regulations prohibit the Owner from delegating their cost to the Contractor.

§ 13.5.2 If the Architect, Owner or public authorities having jurisdiction determine that portions of the Work require additional testing, inspection or approval not included under Section 13.5.1, the Architect will, upon written authorization from the Owner, instruct the Contractor to make arrangements for such additional testing, inspection or approval by an entity acceptable to the Owner, and the Contractor shall give timely notice to the Architect of when and where tests and inspections are to be made so that the Architect may be present for such procedures. Such costs, except as provided in Section 13.5.3, shall be at the Owner's expense.

§ 13.5.3 If such procedures for testing, inspection or approval under Sections 13.5.1 and 13.5.2 reveal failure of the portions of the Work to comply with requirements established by the Contract Documents, all costs made necessary by such failure including those of repeated procedures and compensation for the Architect's services and expenses shall be at the Contractor's expense.

§ 13.5.4 Required certificates of testing, inspection or approval shall, unless otherwise required by the Contract Documents, be secured by the Contractor and promptly delivered to the Architect.

AIA Document A201® – 2007. Copyright © 1911, 1915, 1918, 1925, 1937, 1951, 1958, 1961, 1963, 1966, 1970, 1976, 1987, 1997 and 2007 by The American Institute of Architects. All rights reserved. The "American Institute of Architects," "AIA," the AIA Logo, "A201," and "AIA Contract Documents" are registered trademarks and may not be used without permission. This document was produced by AIA software at 12:23:28 ET on 11/11/2020 under Order No.6115176972 which expires on 09/19/2021, is not for resale, is licensed for one-time use only, and may only be used in accordance with the AIA Contract Documents® Terms of Service. To report copyright violations, e-mail copyright@aia.org.
User Notes:

§ 13.5.5 If the Architect is to observe tests, inspections or approvals required by the Contract Documents, the Architect will do so promptly and, where practicable, at the normal place of testing.

§ 13.5.6 Tests or inspections conducted pursuant to the Contract Documents shall be made promptly to avoid unreasonable delay in the Work.

§ 13.5.7 No tests or inspections or results thereof shall constitute an acceptance of any Work not conforming to the requirements of Contract Documents.

§ 13.6 INTEREST

Interest payments will not be required for late payments under the terms of this Contract.

§ 13.7 TIME LIMITS ON CLAIMS

Commencement of Statutory Limitations Period and Statute of Repose shall be in accordance with the laws of the State of Maryland.

§ 13.8 EQUAL OPPORTUNITY

§13.8.1 The Contractor shall maintain minimum policies of employment as follows:

§13.8.1.1 The Contractor and the Contractor's Subcontractors shall not discriminate against any employee or applicant for employment because of race, religion, color, sex or national origin. The Contractor shall take affirmative action to ensure that applicants are employed, and that employees are treated during employment without regard to their race, religion, color, sex or national origin. Such action shall include, but not be limited to, the following: employment, upgrading, demotion or transfer; recruitment or recruitment advertising; layoff or termination; rates of pay or other forms of compensation; and selection for training, including apprenticeship. The Contractor agrees to post in conspicuous places, available to employees and applicants for employment, notices setting forth the policies of nondiscrimination.

§13.8.1.2 The Contractor and the Contractor's Subcontractors shall, in all solicitations or advertisements for employees placed by them or on their behalf, state that all qualified applicants will receive consideration for employment without regard to race, religion, color, sex or national origin.

ARTICLE 14 TERMINATION OR SUSPENSION OF THE CONTRACT

§ 14.1 TERMINATION BY THE CONTRACTOR

§ 14.1.1 The Contractor may terminate the Contract if the Work is stopped for a period of 120 consecutive days through no act or fault of the Contractor or a Subcontractor, Sub-subcontractor or their agents or employees or any other persons or entities performing portions of the Work under direct or indirect contract with the Contractor, for any of the following reasons:

.1 Issuance of an order of a court or other public authority having jurisdiction that requires all Work to be stopped;

.2 An act of government, such as a declaration of national emergency that requires all Work to be stopped;

.3 Because the Architect has not issued a Certificate for Payment and has not notified the Contractor of the reason for withholding certification as provided in Section 9.4.1, or because the Owner has not made payment on a Certificate for Payment within the time stated in the Contract Documents; or

.4 Is Deleted.

§ 14.1.2 The Contractor may terminate the Contract if, through no act or fault of the Contractor or a Subcontractor, Sub-subcontractor or their agents or employees or any other persons or entities performing portions of the Work under direct or indirect contract with the Contractor, repeated suspensions, delays or interruptions of the entire Work by the Owner as described in Section 14.3 constitute in the aggregate more than 100 percent of the total number of days scheduled for completion, or 120 days in any 365-day period, whichever is less.

§ 14.1.3 If one of the reasons described in Section 14.1.1 or 14.1.2 exists, the Contractor may, upon seven days' written notice to the Owner and Architect, terminate the Contract and recover from the Owner payment as set forth in the provisions of this Agreement regarding termination by the Owner for convenience.

AIA Document A201® – 2007. Copyright © 1911, 1915, 1918, 1925, 1937, 1951, 1958, 1961, 1963, 1966, 1970, 1976, 1987, 1997 and 2007 by The American Institute of Architects. All rights reserved. The "American Institute of Architects," "AIA," the AIA Logo, "A201," and "AIA Contract Documents" are registered trademarks and may not be used without permission. This document was produced by AIA software at 12:23:28 ET on 11/11/2020 under Order No.6115176972 which expires on 09/19/2021, is not for resale, is licensed for one-time use only, and may only be used in accordance with the AIA Contract Documents® Terms of Service. To report copyright violations, e-mail copyright@aia.org.
User Notes:

§ 14.1.4 Is Deleted.

§ 14.2 TERMINATION BY THE OWNER FOR CAUSE

§ 14.2.1 The Owner may terminate the Contract if the Contractor

.1 -refuses or fails to supply enough properly skilled workers or proper materials;

.2 fails to make payment to Subcontractors for materials or labor in accordance with the respective agreements between the Contractor and the Subcontractors;

.3 -disregards applicable laws, statutes, ordinances, codes, rules and regulations, or lawful orders of a public authority; or

.4 otherwise is guilty of substantial breach of a provision of the Contract Documents.

§ 14.2.2 When any of the above reasons exist, the Owner, upon certification by the Initial Decision Maker that sufficient cause exists to justify such action, may without prejudice to any other rights or remedies of the Owner and after giving the Contractor and the Contractor's surety, if any, seven days' written notice, terminate employment of the Contractor and may, subject to any prior rights of the surety:

.1 Exclude the Contractor from the site and take possession of all materials, equipment, tools, and construction equipment and machinery thereon owned by the Contractor;

.2 Accept assignment of subcontracts pursuant to Section 5.4; and

.3 Finish the Work by whatever reasonable method the Owner may deem expedient. Upon written request of the Contractor, the Owner shall furnish to the Contractor a detailed accounting of the costs incurred by the Owner in finishing the Work.

§ 14.2.3 When the Owner terminates the Contract for one of the reasons stated in Section 14.2.1, the Contractor shall not be entitled to receive further payment until the Work is finished.

§ 14.2.4 If the unpaid balance of the Contract Sum exceeds costs of finishing the Work, including compensation for the Architect's services and expenses made necessary thereby, and other damages incurred by the Owner and not expressly waived, such excess shall be paid to the Contractor. If such costs and damages exceed the unpaid balance, the Contractor shall pay the difference to the Owner. The amount to be paid to the Contractor or Owner, as the case may be, shall be certified by the Initial Decision Maker, upon application, and this obligation for payment shall survive termination of the Contract.

§ 14.2.5 In the event that is adjusted that the Owner's termination for cause is not justified, then the Termination shall be deemed to be a termination by the Owner for convenience and the Contractor shall be entitled to compensation as only set forth in the provisions of this Agreement regarding termination by Owner for Convenience.

§ 14.3 SUSPENSION BY THE OWNER FOR CONVENIENCE

§ 14.3.1 The Owner may, without cause, order the Contractor in writing to suspend, delay or interrupt the Work in whole or in part for such period of time as the Owner may determine.

§ 14.3.2 The Contract Sum and Contract Time shall be adjusted for increases in the cost and time caused by suspension, delay or interruption as described in Section 14.3.1. Adjustment of the Contract Sum shall include profit. No adjustment shall be made to the extent

.1 that performance is, was or would have been so suspended, delayed or interrupted by another cause for which the Contractor is responsible; or

.2 that an equitable adjustment is made or denied under another provision of the Contract.

§ 14.4 TERMINATION BY THE OWNER FOR CONVENIENCE

§ 14.4.1 The Owner may, at any time, terminate the Contract for the Owner's convenience and without cause. At its option the Owner may terminate this Contract in whole or from time to time in part at any time by written notice thereof to the Contractor. Upon any such termination, Contractor agrees to waive any claims for damages, including loss of anticipated profits, on account thereof, and as the sole right and remedy of the Contractor, Owner shall pay Contractor in accordance with 14.4.2 below. The provisions of the Contract, which by their nature survive final acceptance of the Work, shall remain in full force and effect after such termination to include but not limited to warranties and obligations for the correction of Work not confirming to the Contract Documents. Upon receipt of the Termination Notice, Contractor shall, unless the Notice direct otherwise, immediately discontinue the Work and, to the extent specified in the Notice, place no further orders or subcontracts for materials, equipment, services, or

AIA Document A201® – 2007. Copyright © 1911, 1915, 1918, 1925, 1937, 1951, 1958, 1961, 1963, 1966, 1970, 1976, 1987, 1997 and 2007 by The American Institute of Architects. All rights reserved. The "American Institute of Architects," "AIA," the AIA Logo, "A201," and "AIA Contract Documents" are registered trademarks and may not be used without permission. This document was produced by AIA software at 12:23:28 ET on 11/11/2020 under Order No.6115176972 which expires on 09/19/2021, is not for resale, is licensed for one-time use only, and may only be used in accordance with the AIA Contract Documents® Terms of Service. To report copyright violations, e-mail copyright@aia.org.
User Notes:

facilities and shall promptly make every reasonable effort to procure cancellation of such orders or subcontracts upon terms satisfactory to the Owner and shall thereafter do only such Work and perform such services as may be directed by the Owner as necessary to preserve and protect Work already in progress and to protect materials, plans and equipment on the Site or in transit thereto. Upon such termination, the obligations of the Contractor shall continue as to portions of the Work already performed and as to bona fide obligations assumed by the Contractor prior to the date of termination.

§ 14.4.2 Upon receipt of written notice from the Owner of such termination for the Owner's convenience, the Contractor shall

.1 cease operations as directed by the Owner in the notice;

.2 take actions necessary, or that the Owner may direct, for the protection and preservation of the Work; and

.3 except for Work directed to be performed prior to the effective date of termination stated in the notice, terminate all existing subcontracts and purchase orders and enter into no further subcontracts and purchase orders.

§ 14.4.3 Upon Termination for Convenience, the provisions of the Contract, which by their nature, survive any final acceptance of the Work, shall remain in full force and effect after such termination to include but not limited to warranties and obligations for the correction of Work not conforming to the Contract Documents. Upon receipt of the Termination Notice, Contractor shall, unless the Notice directs otherwise, immediately discontinue the Work and, to the extent specified in the Notice, place no future orders or Subcontracts for materials, equipment, services or facilities and shall promptly make every reasonable effort to procure cancellation of such orders or Subcontracts upon terms satisfactory to the Owner and shall thereafter do only such Work and perform such services as may be directed by the Owner as necessary to preserve and protect Work already in progress and to protect materials, plant and equipment on the site or in transit thereto. Upon termination, Contractor shall be entitled to be paid the full cost of all Work properly done by Contractor on account of the portion of Work Performed. If at the date of such termination, Contractor has properly prepared or fabricated off the site any goods for subsequent incorporation in the Work, and if Contractor delivers such goods to the Site or to such other place as the Owner shall reasonably direct, then Contractor shall be paid for such goods or materials. No other payment shall be made by reason of damages or otherwise, including but not limited to loss of anticipated profits, overhead, or any other claim or amount whatsoever.

ARTICLE 15 CLAIMS AND DISPUTES

§ 15.1 CLAIMS

§ 15.1.1 DEFINITION

A Claim is a demand or assertion by one of the parties seeking, as a matter of right, payment of money, or other relief with respect to the terms of the Contract. The term "Claim" also includes other disputes and matters in question between the Owner and Contractor arising out of or relating to the Contract. The responsibility to substantiate Claims shall rest with the party making the Claim.

§ 15.1.2 NOTICE OF CLAIMS

Claims by the Contractor must be made by written notice to the Owner and to the Initial Decision Maker with a copy sent to the Architect, if the Architect is not serving as the Initial Decision Maker. Claims by Contractor must be made within 21 days after occurrence of the event giving rise to such Claim or within 21 days after the Contractor first recognizes the condition giving rise to the Claim, whichever is later. Contractor claim(s) shall not be valid unless made in strict accordance with this subparagraph.

§ 15.1.3 CONTINUING CONTRACT PERFORMANCE

Pending final resolution of a Claim, except as otherwise agreed in writing or as provided in Section 9.7 and Article 14, the Contractor shall proceed diligently with performance of the Contract and the Owner shall continue to make payments in accordance with the Contract Documents. The Architect will prepare Change Orders and issue Certificates for Payment in accordance with the decisions of the Initial Decision Maker.

§ 15.1.4 CLAIMS FOR ADDITIONAL COST

If the Contractor wishes to make a Claim for an increase in the Contract Sum, written notice as provided herein shall be given before proceeding to execute the Work. Prior notice is not required for Claims relating to an emergency endangering life or property arising under Section 10.4. A Claim must be processed as defined herein, Article 15 and comply with all requirements of Article 7

AIA Document A201® – 2007. Copyright © 1911, 1915, 1918, 1925, 1937, 1951, 1958, 1961, 1963, 1966, 1970, 1976, 1987, 1997 and 2007 by The American Institute of Architects. All rights reserved. The "American Institute of Architects," "AIA," the AIA Logo, "A201," and "AIA Contract Documents" are registered trademarks and may not be used without permission. This document was produced by AIA software at 12:23:28 ET on 11/11/2020 under Order No.6115176972 which expires on 09/19/2021, is not for resale, is licensed for one-time use only, and may only be used in accordance with the AIA Contract Documents® Terms of Service. To report copyright violations, e-mail copyright@aia.org.
User Notes:

§ 15.1.5 CLAIMS FOR ADDITIONAL TIME

§ 15.1.5.1 If the Contractor wishes to make a Claim for an increase in the Contract Time, written notice as provided herein shall be given. No claim for delay damages of any kind or nature shall be valid and no such damages shall be paid by the Owner except upon Owner's written consent which consent is in the sole and absolute discretion of the Owner. No written consent by Owner to damages for one period of delay, entitle Contractor to damages for any other period of delay. A Claim for additional time must be for adverse weather conditions and the actual conditions must exceed the cumulative monthly adverse weather day totals indicated in 15.1.5.2.

§ 15.1.5.2 If adverse weather conditions are the basis for a Claim for additional time, the time must exceed the time as defined in the schedule below, such Claim shall be documented by data substantiating that weather conditions were abnormal for the period of time, exceeded the schedule below and could not have been reasonably anticipated and had an adverse effect on the scheduled construction. The State of Maryland, Department of General Services, Special Provisions Section of Hagerstown, Maryland will be used in the calculation of the monthly anticipated adverse weather delays. The monthly-anticipated adverse weather delays are as follows, in workdays. The Contractor's schedule must reflect these anticipated adverse weather delay days in weather dependent activities:

Jan	Feb	March	April	May	June	July	Aug	Sept	Oct	Nov	Dec
8	7	7	8	8	7	5	6	4	6	5	5

In any event, Contractor's Claim(s) for delay in the performance of the Work due to adverse weather conditions is strictly limited to a Claim for additional for additional time only. In no event shall the Contractor be entitled to monetary damages or any other compensation as a result of a delay in the performance of the Work due to adverse weather conditions.

§ 15.1.6 CLAIMS FOR CONSEQUENTIAL DAMAGES

The Contractor and Owner waive Claims against each other for consequential damages arising out of or relating to this Contract. This mutual waiver includes

.1 damages incurred by the Owner for rental expenses, for losses of use, income, profit, financing, business and reputation, and for loss of management or employee productivity or of the services of such persons; and

.2 damages incurred by the Contractor for principal office expenses including the compensation of personnel stationed there, for losses of financing, business and reputation, and for loss of profit except anticipated profit arising directly from the Work.

This mutual waiver is applicable, without limitation, to all consequential damages due to either party's termination in accordance with Article 14. Nothing contained in this Section 15.1.6 shall be deemed to preclude an award of liquidated damages, when applicable, in accordance with the requirements of the Contract Documents.

§ 15.2 INITIAL DECISION

§ 15.2.1 Claims, excluding those arising under Sections 10.3, 10.4, 11.3.9, and 11.3.10, shall be referred to the Initial Decision Maker for initial decision. The Architect will serve as the Initial Decision Maker, unless otherwise indicated in the Agreement. Except for those Claims excluded by this Section 15.2.1, an initial decision shall be required as a condition precedent to mediation of any Claim arising prior to the date final payment is due, unless 30 days have passed after the Claim has been referred to the Initial Decision Maker with no decision having been rendered. Unless the Initial Decision Maker and all affected parties agree, the Initial Decision Maker will not decide disputes between the Contractor and persons or entities other than the Owner.

§ 15.2.2 The Initial Decision Maker will review Claims and within ten days of the receipt of a Claim take one or more of the following actions: (1) request additional supporting data from the claimant or a response with supporting data from the other party, (2) reject the Claim in whole or in part, (3) approve the Claim, (4) suggest a compromise, or (5) advise the parties that the Initial Decision Maker is unable to resolve the Claim if the Initial Decision Maker lacks sufficient information to evaluate the merits of the Claim or if the Initial Decision Maker concludes that, in the Initial Decision Maker's sole discretion, it would be inappropriate for the Initial Decision Maker to resolve the Claim.

§ 15.2.3 In evaluating Claims, the Initial Decision Maker may, but shall not be obligated to, consult with or seek information from either party or from persons with special knowledge or expertise who may assist the Initial Decision

AIA Document A201® – 2007. Copyright © 1911, 1915, 1918, 1925, 1937, 1951, 1958, 1961, 1963, 1966, 1970, 1976, 1987, 1997 and 2007 by The American Institute of Architects. All rights reserved. The "American Institute of Architects," "AIA," the AIA Logo, "A201," and "AIA Contract Documents" are registered trademarks and may not be used without permission. This document was produced by AIA software at 12:23:28 ET on 11/11/2020 under Order No.6115176972 which expires on 09/19/2021, is not for resale, is licensed for one-time use only, and may only be used in accordance with the AIA Contract Documents® Terms of Service. To report copyright violations, e-mail copyright@aia.org.
User Notes:

Maker in rendering a decision. The Initial Decision Maker may request the Owner to authorize retention of such persons at the Owner's expense.

§ 15.2.4 If the Initial Decision Maker requests a party to provide a response to a Claim or to furnish additional supporting data, such party shall respond, within ten days after receipt of such request, and shall either (1) provide a response on the requested supporting data, (2) advise the Initial Decision Maker when the response or supporting data will be furnished or (3) advise the Initial Decision Maker that no supporting data will be furnished. Upon receipt of the response or supporting data, if any, the Initial Decision Maker will either reject or approve the Claim in whole or in part.

§ 15.2.5 The Initial Decision Maker will render an initial decision approving or rejecting the Claim, or indicating that the Initial Decision Maker is unable to resolve the Claim. This initial decision shall (1) be in writing; (2) state the reasons therefor; and (3) notify the parties and the Architect, if the Architect is not serving as the Initial Decision Maker, of any change in the Contract Sum or Contract Time or both. The initial decision shall be subject to mediation and, if the parties fail to resolve their dispute through mediation, the claim shall be resolved by litigation.

§ 15.2.6 Either party may file for mediation of an initial decision at any time, subject to the terms of Section 15.2.6.1.

§ 15.2.6.1 Either party may, within 30 days from the date of an initial decision, demand in writing that the other party file for mediation within 60 days of the initial decision. If such a demand is made and the party receiving the demand fails to file for mediation within the time required, then both parties waive their rights to mediate or pursue litigation with respect to the initial decision.

§ 15.2.7 In the event of a Claim against the Contractor, the Owner may, but is not obligated to, notify the surety, if any, of the nature and amount of the Claim. If the Claim relates to a possibility of a Contractor's default, the Owner may, but is not obligated to, notify the surety and request the surety's assistance in resolving the controversy.

§ 15.2.8 If a Claim relates to or is the subject of a mechanic's lien, the party asserting such Claim may proceed in accordance with applicable law to comply with the lien notice or filing deadlines.

§ 15.3 MEDIATION

§ 15.3.1 Claims, disputes, or other matters in controversy arising out of or related to the Contract except those waived as provided for in Sections 9.10.4, 9.10.5, and 15.1.6 shall be subject to mediation as a condition precedent to binding dispute resolution.

§ 15.3.2 The parties shall endeavor to resolve their Claims by mediation which, unless the parties mutually agree otherwise, shall be administered by the American Arbitration Association in accordance with its Construction Industry Mediation Procedures in effect on the date of the Agreement. A request for mediation shall be made in writing, delivered to the other party to the Contract, and filed with the person or entity administering the mediation. The request may be made concurrently with the filing of litigation proceedings but, in such event, mediation shall proceed in advance of litigation proceedings, which shall be stayed pending mediation for a period of 60 days from the date of filing, unless stayed for a longer period by agreement of the parties or court order. -

§ 15.3.3 The parties shall share the mediator's fee and any filing fees equally. The mediation shall be held in the place where the Project is located, unless another location is mutually agreed upon. Agreements reached in mediation shall be enforceable as settlement agreements in any court having jurisdiction thereof.

§ 15.4 ARBITRATION is deleted and replaced with Litigation as follows,
All disputes and other matters in question between the parties to this Agreement which cannot be resolved by the parties in accordance with the terms of this Agreement shall be referred to legal counsel and resolved in the Circuit Court for Frederick County, Maryland and all parties hereto agree to submit themselves to the jurisdiction of that Court. During any legal proceedings or other dispute resolution proceedings which may be agreed to between the parties, Owner and Contractor shall comply with sub-paragraph 4.74.

(Paragraphs deleted)

AIA Document A201® – 2007. Copyright © 1911, 1915, 1918, 1925, 1937, 1951, 1958, 1961, 1963, 1966, 1970, 1976, 1987, 1997 and 2007 by The American Institute of Architects. All rights reserved. The "American Institute of Architects," "AIA," the AIA Logo, "A201," and "AIA Contract Documents" are registered trademarks and may not be used without permission. This document was produced by AIA software at 12:23:28 ET on 11/11/2020 under Order No.6115176972 which expires on 09/19/2021, is not for resale, is licensed for one-time use only, and may only be used in accordance with the AIA Contract Documents® Terms of Service. To report copyright violations, e-mail copyright@aia.org.
User Notes: (1517250872)

Additions and Deletions Report for
AIA® Document A201® – 2007

This Additions and Deletions Report, as defined on page 1 of the associated document, reproduces below all text the author has added to the standard form AIA document in order to complete it, as well as any text the author may have added to or deleted from the original AIA text. Added text is shown underlined. Deleted text is indicated with a horizontal line through the original AIA text.

Note: This Additions and Deletions Report is provided for information purposes only and is not incorporated into or constitute any part of the associated AIA document. This Additions and Deletions Report and its associated document were generated simultaneously by AIA software at 12:23:28 ET on 11/11/2020.

PAGE 1

(Name and location or address)
Lincoln "A" Facility
Roof Replacemennt
250 Madison Street
Frederick, Maryland 21701
FCPS Bid 21C5

...

(Name, legal status and address)
The Board of Education of Frederick County
191 South East Street
Frederick, Maryland 21701-5918

...

(Name, legal status and address)
Bushey Feight Morin Architects
473 North Potomac Street
Hagerstown, Maryland 21740

PAGE 3

~~2.4,~~ 2.4. 3.1.3, 3.5, 3.10.2, 4.2.7

...

9.7, 11.3.9, 11.3.10, 13.1, 15.2.5, 15.2.6.1, 15.3.1, ~~15.3.2, 15.4.1~~15.3.2

PAGE 4

2.2.1, 3.11, 4.2.8, **7**, 7.2.1, 7.2.1.A, 7.2.1.B, 7..2.1.C, 7.2.1.D, 7.2.1.E, 7.2.1.F, 7.2.1.G, 7.3.1, 7.4, 8.3.1, 9.3.1.1, 11.3.9

...

3.2.4, 6.1.1, 6.3, 7.3.9, 9.3.3, 9.10.4, ~~10.3.3, **15**, 15.4~~9.5.4, 9.5.5, 10.3.3, **15**

...

~~15.4.1~~13.7

...

3.2.4, ~~3.7.4, 6.1.1,~~ 3.7.46.1.1, 8.3.2, 10.3.2, **15.1.5**

Additions and Deletions Report for AIA Document A201® – 2007. Copyright © 1911, 1915, 1918, 1925, 1937, 1951, 1958, 1961, 1963, 1966, 1970, 1976, 1987, 1997 and 2007 by The American Institute of Architects. All rights reserved. The "American Institute of Architects," "AIA," the AIA Logo, "A201," and "AIA Contract Documents" are registered trademarks and may not be used without permission. This document was produced by AIA software at 12:23:28 ET on 11/11/2020 under Order No.6115176972 which expires on 09/19/2021, is not for resale, is licensed for one-time use only, and may only be used in accordance with the AIA Contract Documents® Terms of Service. To report copyright violations, e-mail copyright@aia.org.
User Notes: (1517250872)

...

~~Claims Subject to Arbitration~~
~~15.3.1, 15.4.1~~

...

1.6, 3.2.3, 3.6, 3.7, 3.12.10, 3.13, 4.1.1, 9.6.4, 10.2.2, 11.1, 11.3, 13.1, 13.4, 13.5.1, 13.5.2, 13.6, 14.1.1, 14.2.1.3, ~~15.2.8, 15.4.2, 15.4.3~~15. 2.8

...

3.4.2, 3.7.4, 3.12.8, 3.14.2, 4.1.2, 9.3.2, 9.8.5, 9.9.1, 9.10.2, 9.10.3, 11.3.1, ~~13.2, 13.4.2, 15.4.4.2~~13.2
~~**Consolidation or Joinder.**~~
~~**15.4.4.**~~
PAGE 5

3.3.2, 3.18, 3.4.4, 5.3, 6.1.3, 6.2, 9.5.1, 10.2.8

...

2.3, 2.4, 3.5, 4.2.6, 6.2.5, 9.5.1, 9.5.2, 9.6.6, 9.8.2, 9.9.3, 9.10.4, 9.10.6, 12.2.1

...

3.2, 3.7.4, 5.2.3, 7.2.1, 7.3.1, 7.4, **8.3**, 9.5.1, 9.7, 10.3.2, ~~10.4,~~ 10.4 14.3.2, 15.1.5, 15.2.5

...

6.3, 7.3.9, 9.5.4, 9.5.5, 15.1, 15.2
PAGE 6

Equal Opportunity 13.8

...

4.2.1, 4.2.9, 9.8.2, **9.10**, 11.1.2, 11.1.3, 11.3.1, 11.3.5, 12.3, 14.2.4, 14.4.3
~~Financial Arrangements, Owner's~~
~~2.2.1, 13.2.2, 14.1.1.4~~

...

10.2.4, 10.2.4.1, **10.3**

...

2.1.2, **2.2**, 3.2.2, 3.12.4, 3.12.10, 6.1.3, 6.1.4, 6.2.5, 9.6.1, 9.6.4, 9.9.2, 9.10.3, 10.3.3, 11.2, 11.4, 13.5.1, 13.5.2, ~~14.1.1.4, 14.1.4,~~ 15.1.3

...

~~**1.1.7**~~**1.1.7, 1.5.1, 1.5.2**

...

Additions and Deletions Report for AIA Document A201® – 2007. Copyright © 1911, 1915, 1918, 1925, 1937, 1951, 1958, 1961, 1963, 1966, 1970, 1976, 1987, 1997 and 2007 by The American Institute of Architects. All rights reserved. The "American Institute of Architects," "AIA," the AIA Logo, "A201," and "AIA Contract Documents" are registered trademarks and may not be used without permission. This document was produced by AIA software at 12:23:28 ET on 11/11/2020 under Order No.6115176972 which expires on 09/19/2021, is not for resale, is licensed for one-time use only, and may only be used in accordance with the AIA Contract Documents® Terms of Service. To report copyright violations, e-mail copyright@aia.org.
User Notes:

4.2.11, 4.2.12, 15.1.4
~~Judgment on Final Award~~
~~15.4.2~~

...

1.5, 3.2.3, 3.6, 3.7, 3.12.10, 3.13, 4.1.1, 9.6.4, 9.9.1, 10.2.2, 11.1.1, 11.3, ~~13.1,~~ 13.4, 13.5.1, 13.5.2, 13.6, 14, ~~15.2.8, 15.4~~15.2.8

...

12.2.5, ~~13.7, 15.4.1.1~~13.7

...

~~2.3,~~ 2.3.1, 3.2.2, 3.5, 3.12.10, 3.17, 3.18.1, 4.2.6, 4.2.7, 4.2.12, 6.2.2, 9.4.2, 9.6.4, 9.6.7, 10.2.5, 10.3.3, 11.1.2, 11.2, 11.3.7, 12.2.5, 13.4.2

...

2.1.2, 2.2, 2.4, 3.2.2, 3.10, 3.11, 3.12.5, 3.15.1, 4.2.7, 5.2, 5.3, 5.3.1, 5.4.1, 6.2.4, 7.3, 7.4, 8.2, 9.2, 9.3.1, 9.3.3, 9.4.1, 9.5, 9.6, 9.7, 9.8, 9.9, 9.10, 11.1.3, 11.3.1.5, 11.3.6, 11.3.10, 12.2, 13.5, 13.7, 14, 15
PAGE 7

8.3.1, 10.3.5, 10.3.6, 15.2.1, 15.2.5, 15.2.6, ~~**15.3**, 15.4.1~~**15.3**

...

2.2.1, ~~2.3, 2.4,~~ 2.3.1, 2.4.1, 3.2.4, 3.3.1, 3.7.2, 3.12.9, 5.2.1, 9.7, 9.10, 10.2.2, 11.1.3, 12.2.2.1, 13.3, 13.5.1, 13.5.2, 14.1, 14.2, ~~15.2.8, 15.4.1~~15.2.8

...

2.3, 2.4, 3.3.1, 3.9.2, 3.12.9, 3.12.10, 5.2.1, 9.7, 9.10, 10.2.2, 10.3, 11.1.3, 11.3.6, 12.2.2.1, **13.3**, 14, ~~15.2.8, 15.4.1~~15.2.8

...

3.7.4, 10.2.8, ~~**15.1.2**, 15.4~~**15.1.2**

...

2.1.2, **2.2**, 3.2.2, 3.12.10, 6.1.3, 6.1.4, 6.2.5, 9.3.2, 9.6.1, 9.6.4, 9.9.2, 9.10.3, 10.3.3, 11.2, 11.3, 13.5.1, 13.5.2, ~~14.1.1.4, 14.1.4,~~ 15.1.3

...

1.5, 2.1.1, 2.3, 2.4, 3.4.2, 3.8.1, 3.12.10, 3.14.2, 4.1.2, 4.1.3, 4.2.4, 4.2.9, 5.2.1, 5.2.4, 5.4.1, 6.1, 6.3, 7.2.1, 7.3.1, 8.2.2, 8.3.1, 9.3.1, 9.3.2, 9.5.1, 9.6.4, 9.9.1, 9.10.2, 10.3.2, 11.1.3, 11.3.3, 11.3.10, 12.2.2, 12.3, ~~13.2.2,~~ 14.3, 14.4, 15.2.7

...

2.2.1, ~~13.2.2,~~ 14.1.1.4

...

Additions and Deletions Report for AIA Document A201® – 2007. Copyright © 1911, 1915, 1918, 1925, 1937, 1951, 1958, 1961, 1963, 1966, 1970, 1976, 1987, 1997 and 2007 by The American Institute of Architects. All rights reserved. The "American Institute of Architects," "AIA," the AIA Logo, "A201," and "AIA Contract Documents" are registered trademarks and may not be used without permission. This document was produced by AIA software at 12:23:28 ET on 11/11/2020 under Order No.6115176972 which expires on 09/19/2021, is not for resale, is licensed for one-time use only, and may only be used in accordance with the AIA Contract Documents® Terms of Service. To report copyright violations, e-mail copyright@aia.org.
User Notes: (1517250872)

1.1.1, 1.1.6, 1.1.7, **1.5**, 2.2.5, 3.2.2, 3.11, 3.17, 4.2.12, ~~5.3~~5,3, 5.3.1

PAGE 8

4.2.2, **8.2**, 9.8, 9.9.1, ~~14.1.4,~~ 15.1.3

...

1.5, 3.2.3, 3.6, 3.7, 3.12.10, 3.13, 4.1.1, 9.6.4, 9.9.1, 10.2.2, 11.1, 11.4, 13.1, 13.4, 13.5.1, 13.5.2, 13.6, 14, ~~15.2.8, 15.4~~15.2.8

...

3.3.2, 3.18, 4.2.3, ~~5.3,~~ 5.3.1, 6.1.3, 6.2, 6.3, 9.5.1, 10

...

1.1.2, 2.3, 2.4, 3.5, 3.7.4, 3.15.2, 4.2.6, 5.3, 5.4, 6.1, 6.3, 7.3.1, 8.3, 9.5.1, 9.7, 10.2.5, 10.3, 12.2.2, 12.2.4, **13.4**, ~~14, 15.4~~14

...

~~Rules and Notices for Arbitration~~
~~15.4.1~~

...

3.3.1, 4.2.2, 4.2.7, ~~5.3,~~ 5.3.1, **10.1**, 10.2, 10.4

...

9.2, 9.2.1, 9.2.2, 9.3.1

...

~~13.7, 15.4.1.1~~13.7

PAGE 9

5.4.1.1, **14.2, 14.2.5,** 15.1.6

...

14.2.5, 14.4

...

3.2.4, 3.7.4, 5.2.3, 7.2.1, 7.3.1, 7.4, **8.3**, 9.5.1, 9.7, 10.3.2, ~~10.4,~~ 10.4.1, 14.3.2, 15.1.5, 15.2.5

...

2.1.2, 2.2, 2.4, 3.2.2, 3.10, 3.11, 3.12.5, 3.15.1, 4.2, 5.2, 5.3, 5.4, 6.2.4, 7.3, 7.4, 8.2, 9.2, 9.3.1, 9.3.3, 9.4.1, 9.5, 9.6, 9.7, 9.8, 9.9, 9.10, 11.1.3, 12.2, 13.5, 13.7, 14, ~~15.1.2, 15.4~~15.1.2

...

9.9.3, 9.10.3, 9.10.4, 9.10.6, 12.2.2.1, 13.4.2, 14.2.4, 15.1.6

...

Additions and Deletions Report for AIA Document A201® – 2007. Copyright © 1911, 1915, 1918, 1925, 1937, 1951, 1958, 1961, 1963, 1966, 1970, 1976, 1987, 1997 and 2007 by The American Institute of Architects. All rights reserved. The "American Institute of Architects," "AIA," the AIA Logo, "A201," and "AIA Contract Documents" are registered trademarks and may not be used without permission. This document was produced by AIA software at 12:23:28 ET on 11/11/2020 under Order No.6115176972 which expires on 09/19/2021, is not for resale, is licensed for one-time use only, and may only be used in accordance with the AIA Contract Documents® Terms of Service. To report copyright violations, e-mail copyright@aia.org.
User Notes: (1517250872)

1.5.2, 3.4.2, 3.7.4, 3.12.8, 3.14.2, 4.1.2, 9.3.2, 9.8.5, 9.9.1, 9.10.2, 9.10.3, 11.4.1, 13.2, ~~13.4.2, 15.4.4.2~~13.4.2

...

2.3, 2.4, 3.3.1, 3.9, 3.12.9, 3.12.10, 5.2.1, 8.2.2, 9.7, 9.10, 10.2.2, 10.3, 11.1.3, 12.2.2, 12.2.4, **13.3**, 14, ~~15.4.1~~

PAGE 10

The Contract Documents are enumerated in the Agreement between the Owner and Contractor (hereinafter the Agreement) and consist of the Agreement, Conditions of the Contract (General, Supplementary and other Conditions), Drawings, Specifications, Addenda issued prior to execution of the Contract, other documents listed in the Agreement and Modifications issued after execution of the Contract. A Modification is (1) a written amendment to the Contract signed by both parties, (2) a Change Order, (3) a Construction Change Directive or (4) a written order for a minor change in the Work issued by the Architect. ~~Unless~~ As specifically enumerated in the Agreement, the Contract Documents ~~do not~~ shall include the advertisement or invitation to bid, Instructions to Bidders, sample forms, other information furnished by the Owner in anticipation of receiving bids or proposals, the Contractor's bid or proposal, or portions of Addenda relating to bidding requirements.

...

Instruments of Service are representations, in any medium of expression now known or later developed, of the tangible and intangible creative work performed by the Architect and the Architect's consultants under ~~their~~ the Architect respective professional services ~~agreements.~~ agreements with the Owner. Instruments of Service may include, without limitation, studies, surveys, models, sketches, drawings, specifications, and other similar materials. As the design progresses and payments to the Architect are made by the Owner the instruments of services become the property of The Board of Education of Frederick County, see 1.5.1 Ownership and Use of Drawings, Specifications and Other Instruments of Service.

...

§ 1.2.1 The intent of the Contract Documents is to include all items necessary for the proper execution and completion of the Work by the Contractor. The Contract Documents are complementary, and what is required by one shall be as binding as if required by all; performance by the Contractor shall be required only to the extent consistent with the Contract Documents and reasonably inferable from them as being necessary to produce the indicated results. In the event of conflicts or discrepancies among the Contract Documents, interpretations will be based on the following priorities:

1. The Agreement
2. Addenda with those or late date having precedence over those of earlier date
3. The Supplementary Conditions
4. The General Conditions of the Contract for Construction
5. The Contract Specifications
6. The Contract Drawings

PAGE 11

§ 1.5.1 The Architect and the Architect's consultants shall be deemed the authors ~~and owners of their~~ of the respective Instruments of Service, including the Drawings and Specifications, and ~~will~~ The Board of Education of Frederick County will own and retain all common law, statutory and other reserved rights, including copyrights. The Contractor, Subcontractors, Sub-subcontractors, and material or equipment suppliers shall not own or claim a copyright in the Instruments of Service. Submittal or distribution to meet official regulatory requirements or for other purposes in connection with this Project is not to be construed as publication in derogation of the Architect's or Architect's consultants' reserved rights.

§ 1.5.2 The Contractor, Subcontractors, Sub-subcontractors and material or equipment suppliers are authorized to use and reproduce the Instruments of Service provided to them solely and exclusively for execution of the Work. All copies made under this authorization shall bear the copyright notice, if any, shown on the Instruments of Service. The Contractor, Subcontractors, Sub-subcontractors, and material or equipment suppliers may not use the Instruments of

Additions and Deletions Report for AIA Document A201® – 2007. Copyright © 1911, 1915, 1918, 1925, 1937, 1951, 1958, 1961, 1963, 1966, 1970, 1976, 1987, 1997 and 2007 by The American Institute of Architects. All rights reserved. The "American Institute of Architects," "AIA," the AIA Logo, "A201," and "AIA Contract Documents" are registered trademarks and may not be used without permission. This document was produced by AIA software at 12:23:28 ET on 11/11/2020 under Order No.6115176972 which expires on 09/19/2021, is not for resale, is licensed for one-time use only, and may only be used in accordance with the AIA Contract Documents® Terms of Service. To report copyright violations, e-mail copyright@aia.org.
User Notes:

Service on other projects or for additions to this Project outside the scope of the Work without the specific written consent of the ~~Owner, Architect and the Architect's consultants.~~ Owner.

...

§ 2.1.1 The Owner is the person or entity identified as such in the Agreement and is referred to throughout the Contract Documents as if singular in number. The Owner shall designate in writing a representative who shall have express authority to bind the Owner with respect to all matters requiring the Owner's approval or authorization. ~~Except as otherwise provided in Section 4.2.1, the Architect does not have such authority. The term "Owner" means the Owner or the Owner's authorized representative.~~The Architect does not have authority to bind the Owner with respect to all matters requiring the Owner's approval or authorization.

PAGE 12

§ 2.2.1 ~~Prior to commencement of the Work, the Contractor may request in writing that the Owner provide reasonable evidence that the Owner has made financial arrangements to fulfill the Owner's obligations under the Contract. Thereafter, the Contractor may only request such evidence if (1) the Owner fails to make payments to the Contractor as the Contract Documents require; (2) a change in the Work materially changes the Contract Sum; or (3) the Contractor identifies in writing a reasonable concern regarding the Owner's ability to make payment when due. The Owner shall furnish such evidence as a condition precedent to commencement or continuation of the Work or the portion of the Work affected by a material change. After the Owner furnishes the evidence, the Owner shall not materially vary such financial arrangements without prior notice to the Contractor.~~ Is deleted.

§ 2.2.2 Except for permits and fees that are the responsibility of the Contractor under the Contract Documents, including those required under Section 3.7.1, the Owner shall secure and pay for necessary approvals, easements, assessments and charges required for construction, use or occupancy of permanent structures or for permanent changes in existing facilities. Fees for trade and specialty permits, including but not limited to, electrical, plumbing, elevator, fire review(s) and inspection, boiler, pressure vessel and fuel burning permits and all reinspections shall be paid by and at the Contractor's expense.

§ 2.2.3 The Owner shall furnish surveys describing physical characteristics, legal limitations and utility locations for the site of the ~~Project,~~ Project which are known to the Owner, and a legal description of the ~~site.~~ site if requested by the Contractor. The Contractor shall be entitled to rely on the accuracy of information furnished by the Owner ~~but~~ and shall exercise proper precautions relating to the safe performance of the Work.

...

§ 2.2.5 Unless otherwise provided in the Contract or Bidding Documents, the Owner shall furnish to the Contractor one copy of the Contract Documents for purposes of making reproductions pursuant to Section 1.5.2.

...

If the Contractor fails to correct Work that is not in accordance with the requirements of the Contract Documents as required by Section 12.2 or ~~repeatedly~~ fails to carry out Work in accordance with the Contract Documents, the Owner may issue a written order to the Contractor to stop the Work, or any portion thereof, until the cause for such order has been eliminated; however, the right of the Owner to stop the Work shall not give rise to a duty on the part of the Owner to exercise this right for the benefit of the Contractor or any other person or entity, except to the extent required by Section 6.1.3.

...

If the Contractor defaults or neglects to carry out the Work in accordance with the Contract Documents and fails within a ~~ten-day~~ three-day period after receipt of written notice from the Owner to commence and continue correction of such default or neglect with diligence and promptness, the Owner may, without prejudice to or waiver of other remedies the Owner may have, correct such deficiencies. In such case an appropriate Change Order shall be issued deducting from payments then or thereafter due the Contractor the ~~reasonable~~ cost of correcting such deficiencies, including Owner's expenses and compensation for the Architect's additional services made necessary by such default, neglect or failure. Such action by the Owner and amounts charged to the Contractor are both subject to prior approval

Additions and Deletions Report for AIA Document A201® – 2007. Copyright © 1911, 1915, 1918, 1925, 1937, 1951, 1958, 1961, 1963, 1966, 1970, 1976, 1987, 1997 and 2007 by The American Institute of Architects. All rights reserved. The "American Institute of Architects," "AIA," the AIA Logo, "A201," and "AIA Contract Documents" are registered trademarks and may not be used without permission. This document was produced by AIA software at 12:23:28 ET on 11/11/2020 under Order No.6115176972 which expires on 09/19/2021, is not for resale, is licensed for one-time use only, and may only be used in accordance with the AIA Contract Documents® Terms of Service. To report copyright violations, e-mail copyright@aia.org.
User Notes: (1517250872)

of the Architect. If payments then or thereafter due the Contractor are not sufficient to cover such amounts, the Contractor shall pay the difference to the Owner.

...

§ 3.1.1 The Contractor is the person or entity identified as such in the Agreement and is referred to throughout the Contract Documents as if singular in number. The Contractor shall be lawfully ~~licensed, if~~ licensed as required in the jurisdiction where the Project is located. The Contractor shall designate in writing a representative who shall have express authority to bind the Contractor with respect to all matters under this Contract. The term "Contractor" means the Contractor or the Contractor's authorized representative.

PAGE 13

§ 3.1.3 The Contractor shall not be relieved of obligations to perform the Work in accordance with the Contract Documents either by activities or duties of the Owner or the Architect in the ~~Architect's~~ administration of the Contract, or by tests, inspections or approvals required or performed by persons or entities other than the Contractor.

...

§ 3.2.1 Execution of the Contract by the Contractor is a representation that the Contractor has visited the site, become ~~generally~~ familiar with local conditions under which the Work is to be performed and correlated personal observations with requirements of the Contract Documents. The Contractor represents that it has received all information it needs concerning the conditions of the Project site. The Contractor represents that it has inspected the location of the Work and has satisfied itself as to the condition thereof or unknown physical conditions of an unusual nature which differ materially from those ordinarily found to exist and generally recognized as inherent in construction activities of the character provided for in the Contract Documents. Based upon the foregoing inspections, understandings, agreements and acknowledgements, the Contractor agrees and acknowledges that the Contract Sum is just and reasonable compensation for all the Work and that the Work shall not result in any lateral or vertical movement of any structure due to the Contractor's construction activities. The Contractor shall exercise special care in executing subsurface Work in proximity of subsurface utilities, improvements and easements.

§ 3.2.2 Because the Contract Documents are complementary, the Contractor shall, before starting each portion of the Work, carefully study and compare the various Contract Documents relative to that portion of the Work, as well as the information furnished by the Owner pursuant to Section 2.2.3, shall take field measurements of any existing conditions related to that portion of the Work, and shall observe any conditions at the site affecting it. These obligations are for the purpose of facilitating coordination and construction by the Contractor and are not for the purpose of discovering errors, omissions, or inconsistencies in the Contract Documents; however, the Contractor shall promptly report in writing to the Architect and Owner any errors, inconsistencies or omissions discovered by or in the exercise of due diligence should have been discovered or made known to the Contractor as a request for information in such form as the Architect may require. It is recognized that the Contractor's review is made in the Contractor's capacity as a contractor and not as a licensed design professional, unless otherwise specifically provided in the Contract Documents. If the Contractor performs any construction activity knowing it involves a recognized error, inconsistency or omission in the Contract Documents without providing written notice to the Owner and Architect, the Contractor shall assume appropriate responsibility for such performance and shall bear the costs for correction.

§ 3.2.3 The Contractor is not required to ascertain that the Contract Documents are in accordance with applicable laws, statutes, ordinances, codes, rules and regulations, or lawful orders of public authorities, but the Contractor shall promptly report to the Architect in writing any nonconformity discovered by or in the exercise of due diligence should have been discovered or made known to the Contractor as a request for information in such form as the Architect may require.

PAGE 14

§ 3.4.4 The Contractor shall not be relieved of obligations to perform the Work in accordance with the Contract Documents either by activities or duties of the Owner or the Architect or of other Contractors during the performance of the Work or by Tests, inspections or approvals required or performed by persons other than the Contractor, including inspections or approvals performed by the Owner's personnel or by any public authority.

Additions and Deletions Report for AIA Document A201® – 2007. Copyright © 1911, 1915, 1918, 1925, 1937, 1951, 1958, 1961, 1963, 1966, 1970, 1976, 1987, 1997 and 2007 by The American Institute of Architects. All rights reserved. The "American Institute of Architects," "AIA," the AIA Logo, "A201," and "AIA Contract Documents" are registered trademarks and may not be used without permission. This document was produced by AIA software at 12:23:28 ET on 11/11/2020 under Order No.6115176972 which expires on 09/19/2021, is not for resale, is licensed for one-time use only, and may only be used in accordance with the AIA Contract Documents® Terms of Service. To report copyright violations, e-mail copyright@aia.org.
User Notes:

~~The Contractor warrants to the Owner and Architect that materials and equipment furnished under the Contract will be of good quality and new unless the Contract Documents require or permit otherwise. The Contractor further warrants that the Work will conform to the requirements of the Contract Documents and will be free from defects, except for those inherent in the quality of the Work the Contract Documents require or permit. Work, materials, or equipment not conforming to these requirements may be considered defective. The Contractor's warranty excludes remedy for damage or defect caused by abuse, alterations to the Work not executed by the Contractor, improper or insufficient maintenance, improper operation, or normal wear and tear and normal usage. If required by the Architect, the Contractor shall furnish satisfactory evidence as to the kind and quality of materials and equipment.~~ **§ 3.5.1** The Contractor warrants to the Owner and Architect that materials and equipment furnished under the Contract will be of good quality and new unless the Contract Documents require or permit otherwise. The Contractor further warrants that the Work will conform to the requirements of the Contract Documents and will be free from defects, except for those inherent in the quality of the Work the Contract Documents require or permit. Work, materials, or equipment not conforming to these requirements may be considered defective. The Contractor's warranty excludes remedy for damage or defect caused by abuse, alterations to the Work not executed by the Contractor, improper or insufficient maintenance, improper operation, or normal wear and tear and normal usage. If required by the Architect, the Contractor shall furnish satisfactory evidence as to the kind and quality of materials and equipment.

§ 3.5.2 The Minimum Warranty Period will be two (2) years from the date of substantial completion of the project. The Warranty shall include extended warranty period(s) available from equipment manufactures and or extended warranties as required by project specification are required as if individually enumerated herein.

§ 3.5.3 Notwithstanding any other contract provisions to the contrary, the mechanical system and plumbing system must be completely balanced and such balance reports must be reviewed and accepted by the Engineer before the warranty/guarantee period will begin.

...

§ 3.7.1 Unless otherwise provided in the Contract Documents, the Contractor shall secure and pay for the building permit as well as for other permits, fees, licenses, ~~and inspections~~ inspections and reinspections by government agencies necessary for proper execution and completion of the Work that are customarily secured after execution of the Contract and legally required at the time bids are ~~received or negotiations concluded.~~received. Fees for trade and a specialty permit including, but not limited to, electrical, plumbing, elevator, fire review(s), inspections and reinspections, boiler, pressure vessel and fuel burning permits, shall be paid by and at Contractor's expense.

§ 3.7.2 The Contractor shall comply with and give notices required by applicable laws, statutes, ordinances, codes, rules and regulations, and lawful orders of public authorities applicable to performance of the Work. Compliance with local governing jurisdiction requirements shall be completed at no additional cost to the Owner.

§ 3.7.3 If the Contractor performs Work knowing it to be contrary to applicable laws, statutes, ordinances, codes, rules and regulations, or lawful orders of public authorities, the Contractor shall assume appropriate responsibility for such Work and shall bear the costs attributable to correction. The provisions of this Agreement regarding compensation and damages, including delay damages, shall apply.

PAGE 15

§ 3.9 SUPERINTENDENT AND PROJECT MANAGER

§ 3.9.1 The Contractor shall employ a competent ~~superintendent~~ superintendent, project manager and necessary assistants who shall be in attendance at the Project site during performance of the Work. The superintendent shall represent the Contractor, and communications given to the superintendent shall be as binding as if given to the Contractor. Communications shall be confirmed in writing. The Superintendent and necessary staff members shall be in attendance at the Project site during the performance of the Work including completion of all Punch List items.

§ 3.9.2 ~~The Contractor, as soon as practicable after award of the Contract, shall furnish in writing to the Owner through the Architect the name and qualifications of a proposed superintendent. The Architect may reply within 14 days to the Contractor in writing stating (1) whether the Owner or the Architect has reasonable objection to the proposed superintendent or (2) that the Architect requires additional time to review. Failure of the Architect to reply within the 14 day period shall constitute notice of no reasonable objection.~~ Prior to being assigned to the Project both the Project Manager and Superintendent shall be subject to the approval of the Owner. Once approved, the

Additions and Deletions Report for AIA Document A201® – 2007. Copyright © 1911, 1915, 1918, 1925, 1937, 1951, 1958, 1961, 1963, 1966, 1970, 1976, 1987, 1997 and 2007 by The American Institute of Architects. All rights reserved. The "American Institute of Architects," "AIA," the AIA Logo, "A201," and "AIA Contract Documents" are registered trademarks and may not be used without permission. This document was produced by AIA software at 12:23:28 ET on 11/11/2020 under Order No.6115176972 which expires on 09/19/2021, is not for resale, is licensed for one-time use only, and may only be used in accordance with the AIA Contract Documents® Terms of Service. To report copyright violations, e-mail copyright@aia.org.
User Notes:

Superintendent and Project Manager will not be removed from the Project without the Owner's written consent. The Owner reserves and retains the right, at its sole and absolute discretion, to order the Contractor to replace any of the Contractor's employees. In the event the Owner requests Contractor employees' removal, the Contractor shall promptly replace such employees with competent replacements satisfactory to the Owner. The Contractor shall not change the Superintendent or Project Manager without the Owner's consent.

PAGE 16

§ 3.10.1 The Contractor, promptly after being awarded the ~~Contract,~~ Contract and as a condition precedent to the first Application for Payment, shall prepare and submit for the Owner's and Architect's information a Contractor's construction schedule for the Work. The schedule shall not exceed time limits current under the Contract Documents, shall be revised at no cost to the Owner at appropriate intervals as required by the conditions of the Work and Project, shall be related to the entire Project to the extent required by the Contract Documents, and shall provide for expeditious and practicable execution of the Work. The Owner reserves the right to have the Contractor update the schedule with each Application for Payment,

§ 3.10.2 The Contractor shall prepare preliminary construction and a submittal schedule, ~~promptly~~ within 14 days after being awarded the Contract and ~~thereafter as necessary to maintain a current submittal schedule,~~ complete schedules before 60 contract days have elapsed. The contractor shall update the schedules thereafter as necessary to maintain current construction and submittal schedules, and shall submit the schedule(s) for the Architect's ~~approval. The Architect's approval~~ and Owner's review. The Architect's and Owner's review shall not unreasonably be delayed or withheld. The submittal schedule shall (1) be coordinated with the Contractor's construction schedule, and (2) allow the Architect reasonable time to review submittals. Contractor's Construction Schedule shall be in a Critical Path Method (CPM) and bar chart format, indicating sufficient detail, task(s) (the work) and durations(s) (start and completion) of each major item of the Work, the current status of each major item of Work indicating staffing and equipment to comply with the Contract Substantial Completion Date and any Owner approves extensions. Contractor(s) shall provide additional detail when requested by the Architect or Owner and update their Proposed Contractor Schedule to be compliant with the Contract Substantial Completion Date(s). Within 7 days of a request by the Architect or Owner, the Contractor shall furnish to the Owner and Architect a Progress Schedules showing the current progress and completion stage of the Work as compared to the Original Contract Schedule. Progress Schedules shall clearly identify any item of Work, which is behind Schedule along with the Contractor's increased manpower and equipment necessary to comply with the Contract Schedule including any time extensions approved by the Owner. Progress Schedule(s) shall be provided in a Critical Path Method (CPM), bar chart format and electronic as requested by the Owner. During the Owners review the Owner may choose to advise the contractor of work that will be performed by the owner's forces or the Owners separate Contractors. If the Contractor fails to submit a submittal schedule, the Contractor shall not be entitled to any increase in Contract Sum or extension of Contract Time based on the time required for review of submittals. The Contractor shall provide the Owner and Architect updated schedules as a condition precedent to progress payments. The up dated schedules shall be provided by the Contractor as the project progresses and as requested by the Owner or Architect.

§ 3.10.3 The Contractor shall perform the Work in ~~general~~ accordance with the most recent schedules ~~submitted to~~ reviewed by the Owner and ~~Architect.~~ Architect without objection.

...

The Contractor shall maintain at the site for the Owner one copy of the Drawings, Specifications, Addenda, Change Orders and other Modifications, in good order and marked currently to indicate field changes and selections made during construction, and one copy of approved Shop Drawings, Product Data, Samples and similar required submittals. These shall be available to the Architect and shall be delivered to the Architect for submittal to the Owner upon completion of the Work as a record of the Work as constructed. The Owner may request, and Contractor shall provide, at any time during the course of the Project, As-Built Drawings that reflect the then current stage of construction as actually built and be submitted to the Owner for its review. If such drawings are not provided the Owner may withhold progress payment, or in its discretion a portion thereof, until the requested drawings are up to date and provided for the Owners review.

PAGE 17

§ 3.12.4 Shop Drawings, Product Data, Samples and similar submittals are not Contract Documents. Their purpose is to demonstrate the way by which the Contractor proposes to conform to the information given and the design concept

Additions and Deletions Report for AIA Document A201® – 2007. Copyright © 1911, 1915, 1918, 1925, 1937, 1951, 1958, 1961, 1963, 1966, 1970, 1976, 1987, 1997 and 2007 by The American Institute of Architects. All rights reserved. The "American Institute of Architects," "AIA," the AIA Logo, "A201," and "AIA Contract Documents" are registered trademarks and may not be used without permission. This document was produced by AIA software at 12:23:28 ET on 11/11/2020 under Order No.6115176972 which expires on 09/19/2021, is not for resale, is licensed for one-time use only, and may only be used in accordance with the AIA Contract Documents® Terms of Service. To report copyright violations, e-mail copyright@aia.org.
User Notes: (1517250872)

expressed in the Contract Documents for those portions of the Work for which the Contract Documents require submittals. Review by the Architect is subject to the limitations of Section 4.2.7. The Contractor shall submit shop drawings to the Architect for all structural elements of the Work and all other portions of the Work required by the Contract Documents. Informational submittals upon which the Architect is not expected to take responsive action may be so identified in the Contract Documents. Submittals that are not required by the Contract Documents may be returned by the Architect without action.

PAGE 18

§ 3.18.1 To the fullest extent permitted by law the Contractor shall indemnify and hold harmless the Owner, Architect, Architect's consultants, and agents and employees of any of them from and against claims, damages, losses and expenses, including but not limited to attorneys' fees, arising out of or resulting from performance of the Work, provided that such claim, damage, loss or expense is attributable to bodily injury, sickness, disease or death, or to injury to or destruction of tangible property (other than the Work itself), but only to the extent caused by the negligent acts or omissions of the Contractor, a Subcontractor, anyone directly or indirectly employed by them or anyone for whose acts they may be liable, regardless of whether or not such claim, damage, loss or expense is caused in part by a party indemnified ~~hereunder.~~ hereunder including but not limited to the contributing negligence of such party to be indemnified. Such obligation shall not be construed to negate, abridge, or reduce other rights or obligations of indemnity that would otherwise exist as to a party or person described in this Section 3.18.

PAGE 19

§ 4.2.2 The ~~Architect will visit~~ duties of the Architect shall be governed by the Agreement between the Owner and Architect, and will review the site at intervals appropriate to the stage of ~~construction, or as otherwise agreed with the Owner,~~ construction to become generally familiar with the progress and quality of the portion of the Work completed, and to determine in general if the Work observed is being performed in a manner indicating that the Work, when fully completed, will be in accordance with the Contract Documents. ~~However, the Architect will not be required to make exhaustive or continuous on-site inspections to check the quality or quantity of the Work.~~ The Architect will not have control over, charge of, or responsibility for, the construction means, methods, techniques, sequences or procedures, or for the safety precautions and programs in connection with the Work, since these are solely the Contractor's rights and responsibilities under the Contract Documents, except as provided in Section 3.3.1. Notwithstanding other provisions in this Agreement to the contrary, for the purpose of effectuating the Architect's duties in this section, the Architect shall be responsible for exercising reasonable care and diligence in observing on-going Work. No inspection or approval or failure to inspect or approve by the Architect shall relieve the Contractor from complying in all respects with the requirements of the Contract Documents.

§ 4.2.3 On the basis of the site ~~visits, the Architect will keep the Owner reasonably informed~~ reviews, the Architect will report to the Owner and copy the Contractor about the progress and quality of the portion of the Work ~~completed, and report to the Owner~~ completed reporting (1) known deviations from the Contract Documents and from the most recent construction schedule submitted by the Contractor, and (2) defects and deficiencies observed in the Work. The Architect will not be responsible for the Contractor's failure to perform the Work in accordance with the requirements of the Contract Documents. The Architect will not have control over or charge of and will not be responsible for acts or omissions of the Contractor, Subcontractors, or their agents or employees, or any other persons or entities performing portions of the Work.

§ 4.2.3.1 Owner shall be entitled to deduct from the Contract Sum amounts paid to the Architect, for additional services which may be charged by the Architect for additional site visits made necessary by the fault or neglect of the Contractor.

PAGE 20

§ 4.2.7 The Architect will review and ~~approve,~~ or take other appropriate action upon, the Contractor's submittals such as Shop Drawings, Product Data and Samples, but only for the limited purpose of reviewing the adequacy of the structural elements of the building and checking for conformance with information given and the design concept expressed in the Contract Documents. The Architect's action will be taken in accordance with the submittal schedule ~~approved~~ reviewed by the Architect or, in the absence of an approved submittal schedule, with reasonable promptness while allowing sufficient time in the Architect's professional judgment to permit adequate review. Review of such submittals is not conducted for the purpose of determining the accuracy and completeness of other details such as dimensions and quantities, or for substantiating instructions for installation or performance of equipment or systems, all of which remain the responsibility of the Contractor as required by the Contract Documents. The Architect's

Additions and Deletions Report for AIA Document A201® – 2007. Copyright © 1911, 1915, 1918, 1925, 1937, 1951, 1958, 1961, 1963, 1966, 1970, 1976, 1987, 1997 and 2007 by The American Institute of Architects. All rights reserved. The "American Institute of Architects," "AIA," the AIA Logo, "A201," and "AIA Contract Documents" are registered trademarks and may not be used without permission. This document was produced by AIA software at 12:23:28 ET on 11/11/2020 under Order No.6115176972 which expires on 09/19/2021, is not for resale, is licensed for one-time use only, and may only be used in accordance with the AIA Contract Documents® Terms of Service. To report copyright violations, e-mail copyright@aia.org.
User Notes:

review of the Contractor's submittals shall not relieve the Contractor of the obligations under Sections 3.3, 3.5 and 3.12. The Architect's review shall not constitute approval of safety precautions or, unless otherwise specifically stated by the Architect, of any construction means, methods, techniques, sequences or procedures. The Architect's ~~approval~~ reviewed of a specific item shall not indicate approval of an assembly of which the item is a component. Should any local Government authorities require certification or correctness of any structural shop drawings by the Architect of record, the Architect will sign and certify the shop drawings only after the shop drawings have been signed and certified by the both the structural engineer and other professional engineer registered in the State of Maryland on behalf of the manufacturer, fabricator, Subcontractor, or Contractor. The cost for such additional engineering certification shall be borne by the Contractor.

...

§ 4.2.9 The Architect will conduct inspections to determine the date or dates of Substantial Completion and the date of final completion; issue Certificates of Substantial Completion pursuant to Section 9.8; ~~receive~~ receive, review and forward to the ~~Owner,~~ Owner with comments, for the Owner's review and records, written warranties and related documents required by the Contract and assembled by the Contractor pursuant to Section 9.10; and issue a final Certificate for Payment pursuant to Section 9.10. Architect's inspection and issuance of a certificate for final payment and Owner's payment shall not relieve Contractor of responsibility for defects in the Work.

PAGE 21

§ 5.2.2 The Contractor shall not contract ~~with a proposed person or entity~~ or propose to contract with a proposed person, entity or subcontractor unless the Contractor is satisfied that such person, entity or Subcontractor is technically and financially qualified to perform the Work as a Subcontractor in accordance with the Contract Documents. The Contractor shall not Contract with any entity or persons to whom the Owner or Architect has made reasonable and timely objection. The Contractor shall not be required to contract with anyone to whom the Contractor has made reasonable objection.

...

§ 5.2.5 The Contractor shall not enter into any Subcontract, Contract agreement, purchase order or other arrangement for the furnishing of any portion of the materials, services, equipment or Work with any party or entity as such party or entity is an affiliated entity with which the Contractor has a direct or indirect ownership, control or interest unless such Agreement has been approved by the Owner after full disclosure in writing by the Contractor to the Owner of such affiliation or relationship and all details relating to the proposed arrangements.

~~By appropriate agreement, written where legally required for validity, the Contractor shall require each Subcontractor, to the extent of the Work to be performed by the Subcontractor, to be bound to the Contractor by terms of the Contract Documents, and to assume toward the Contractor all the obligations and responsibilities, including the responsibility for safety of the Subcontractor's Work, which the Contractor, by these Documents, assumes toward the Owner and Architect. Each subcontract agreement shall preserve and protect the rights of the Owner and Architect under the Contract Documents with respect to the Work to be performed by the Subcontractor so that subcontracting thereof will not prejudice such rights, and shall allow to the Subcontractor, unless specifically provided otherwise in the subcontract agreement, the benefit of all rights, remedies and redress against the Contractor that the Contractor, by the Contract Documents, has against the Owner. Where appropriate, the Contractor shall require each Subcontractor to enter into similar agreements with Sub-subcontractors. The Contractor shall make available to each proposed Subcontractor, prior to the execution of the subcontract agreement, copies of the Contract Documents to which the Subcontractor will be bound, and, upon written request of the Subcontractor, identify to the Subcontractor terms and conditions of the proposed subcontract agreement that may be at variance with the Contract Documents. Subcontractors will similarly make copies of applicable portions of such documents available to their respective proposed Sub-subcontractors.~~**§ 5.3.1** By appropriate agreement, written where legally required for validity, the Contractor shall require each Subcontractor, to the extent of the Work to be performed by the Subcontractor, to be bound to the Contractor by terms of the Contract Documents, and to assume toward the Contractor all the obligations and responsibilities, including the responsibility for safety of the Subcontractor's Work, which the Contractor, by these Documents, assumes toward the Owner and Architect. Each subcontract agreement shall preserve and protect the rights of the Owner and Architect under the Contract Documents with respect to the Work to be performed by the Subcontractor so that subcontracting thereof will not prejudice such rights, and shall allow to the Subcontractor, unless specifically provided otherwise in the subcontract agreement, the benefit of all rights, remedies and redress against the

Additions and Deletions Report for AIA Document A201® – 2007. Copyright © 1911, 1915, 1918, 1925, 1937, 1951, 1958, 1961, 1963, 1966, 1970, 1976, 1987, 1997 and 2007 by The American Institute of Architects. All rights reserved. The "American Institute of Architects," "AIA," the AIA Logo, "A201," and "AIA Contract Documents" are registered trademarks and may not be used without permission. This document was produced by AIA software at 12:23:28 ET on 11/11/2020 under Order No.6115176972 which expires on 09/19/2021, is not for resale, is licensed for one-time use only, and may only be used in accordance with the AIA Contract Documents® Terms of Service. To report copyright violations, e-mail copyright@aia.org.
User Notes:

Contractor that the Contractor, by the Contract Documents, has against the Owner. Where appropriate, the Contractor shall require each Subcontractor to enter into similar agreements with Sub-subcontractors. The Contractor shall make available to each proposed Subcontractor, prior to the execution of the subcontract agreement, copies of the Contract Documents to which the Subcontractor will be bound, and, upon written request of the Subcontractor, identify to the Subcontractor terms and conditions of the proposed subcontract agreement that may be at variance with the Contract Documents. Subcontractors will similarly make copies of applicable portions of such documents available to their respective proposed Sub-subcontractors.

§ 5.3.2 Contractor shall not withhold sums earned by any Subcontractor on this Project by reason of obligations which may be owing to Contractor from Subcontractor on any other projects ("cross withholding"). Any such cross withholding shall be grounds for termination of Contractor or, in Owner's sole discretion, shall authorize the Owner to engage another Subcontractor to perform the Work at Contractor's expense including all damages and losses caused to Owner by such Subcontractor substitution.

PAGE 22

§ 6.1.1 The Owner reserves the right to and may perform construction or operations related to the Project with the Owner's own forces, and to award separate contracts in connection with other portions of the Project or other construction or operations on the site under Conditions of the Contract identical or substantially similar to these including those portions related to insurance and waiver of subrogation. If the Contractor claims that delay or additional cost is involved because of such action by the Owner, the Contractor shall make such Claim as provided in Article 15.

PAGE 23

§ 6.2.2 If part of the Contractor's Work depends for proper execution or results upon construction or operations by the Owner or a separate contractor, the Contractor shall, prior to proceeding with that portion of the Work, promptly report to the Architect and Owner apparent discrepancies or defects in such other construction that would render it unsuitable for such proper execution and results. Failure of the Contractor so to report shall constitute an acknowledgment that the Owner's or separate contractor's completed or partially completed construction is fit and proper to receive the Contractor's Work, except as to defects not then reasonably discoverable.

...

§ 6.2.4 The Contractor shall promptly remedy damage the Contractor ~~wrongfully~~ causes to completed or partially completed construction or to property of the Owner or separate contractors as provided in Section 10.2.5.

...

§ 7.1.1 Changes in the Work may be accomplished after execution of the Contract, and without invalidating the Contract, by Change Order, Construction Change Directive or order for a minor change in the Work, subject to the limitations stated in this Article 7 and elsewhere in the Contract Documents. The Contractor agrees that it will incorporate the provisions of Article 7 in its entirety into all agreements with lower tier Contractors. It is further understood and agreed that these Change Order pricing provisions, apply to all types of Contracts, Subcontracts and purchases. The Owner and Owner's accountant shall be afforded access to Contractor's records, books and correspondence, instructions, drawings, receipts, Subcontracts, purchase orders, vouchers and any other data relating to the Project as necessary to verify the cost of any change, including wages and benefits paid, for which compensation is sought under this Agreement.

§ 7.1.2 A Change Order shall be based upon agreement among the Owner, Contractor and Architect; a Construction Change Directive requires agreement by the Owner and Architect and may or may not be agreed to by the Contractor; an order for a minor change in the Work may be issued by the Architect alone. Verbal notification approving the Contractor to proceed with a change in the work shall be confirmed in a written format via, CCD, Change Order, Progress minutes, e-mail or other written correspondence and should be made as soon as practical.

§ 7.1.3 Changes in the Work shall be performed under applicable provisions of the Contract Documents, and the Contractor shall proceed promptly, unless otherwise provided in the Change Order, Construction Change Directive or order for a minor change in the Work. A Change Order or Construction Change Directive involving unit cost shall be equitably adjusted in accordance with 7.3.4.

Additions and Deletions Report for AIA Document A201® – 2007. Copyright © 1911, 1915, 1918, 1925, 1937, 1951, 1958, 1961, 1963, 1966, 1970, 1976, 1987, 1997 and 2007 by The American Institute of Architects. All rights reserved. The "American Institute of Architects," "AIA," the AIA Logo, "A201," and "AIA Contract Documents" are registered trademarks and may not be used without permission. This document was produced by AIA software at 12:23:28 ET on 11/11/2020 under Order No.6115176972 which expires on 09/19/2021, is not for resale, is licensed for one-time use only, and may only be used in accordance with the AIA Contract Documents® Terms of Service. To report copyright violations, e-mail copyright@aia.org.
User Notes:

.3 The extent of the adjustment, if any, in the Contract ~~Time.~~Time; and

.4 Comply with all requirements of 7.2.2 below and 7.3.4.

No Change Order shall exceed any of the limitations and requirements of the Contract Documents.

§ 7.2.2 The Contractor shall comply with the following regarding Changes:

(A) A Notice or Request for Change must comply with all of the following:

.1 specifically and in detail describe the nature and cause of the Claim; and

.2 specifically reference the detail(s) on the plans and the specification section(s) that are affected; and

.3 contain an estimate of the increase or decrease in the cost to the Owner; and

.4 include supporting documentation that satisfactorily justifies to the Owner overhead, profit, insurance, sales or payroll taxes and incorporate a detailed quantity survey of all Work added and deleted; and

.5 be submitted in a format acceptable to the Owner.

(B) Additive Changes must comply with the following Mark-Up schedule for Overhead, profit and bond:

If the Cost of the proposed change is $0.00 to $4,999.99, the total combined overhead, profit and bond must not exceed 20%.

If the Cost of the proposed change is $5,000.00 to $14,999.99, the combined overhead, profit and bond must not exceed 15%.

If the Cost of the proposed change is $15,000.00 to $24,999.99, the combined overhead, profit and bond must not exceed 10%.

If the Cost of the proposed change is $25,000.00 to $49,999.99, the combined overhead, profit and bond must not exceed 7%.

If the Cost of the proposed change is over $50,000.00, the combined overhead, profit and bond will be negotiated but will not exceed 5%, the cost of the bond shall be clearly indicated in the detailed proposal regardless of the proposed cost.

(C) The Contractors' markup of Subcontractor Work and supplier's material(s) shall not exceed 7% for changes up to $24,999.99 and the markup shall be negotiated for changes over $25,000.00 but shall not exceed 5% of the Subcontractor(s) cost of the Work.

(D) Overhead cost shall include all the general conditions, expenses, including but not limited to, all coordination, calculations, engineering, field and office supervision, field and office rent utilities, telephone and communications expenses, office supplies, clean-up, debris expenses, administration and preparation. When both additions and deletions are involved in any one change, the allowance for overhead, profit and bond shall be computed on the net increase, if any, with respect to the change.

(E) For decreases in the Work or credits, the Contract Amount shall be decreased 100% of the Scheduled Value of the deleted Work plus overhead, profit and bond. Contractor and Subcontractor(s) credits shall include credit for overhead, profit and Bond, in the same percentages allowed for additive changes in the above mark-up schedule:

(F) The Contractor's total charge to the Owner for the use of equipment owned in whole or in part by the Contractor, its Owners, directors, officers, shareholders, or affiliated or related persons or entities shall consider the rate agreed upon between the Contractor, Owner and Architect at the beginning of the project less operator and fuel. Reference materials such as "the AED Green Book" should be used to establish market rental rates for equipment. The following shall apply;

.1 The appropriate duration of hourly rate shall be calculated based on the entire duration the piece of equipment is on the FCPS site (e.g. if the equipment item has been on the project for 30 days or more the hourly rate shall be the monthly rental divided by 176 hours; if on the project for one week the hourly rental shall be the weekly rental divided by 40; if on the project for a day the hourly rental shall be the daily rental divided by 8; if brought to the project for the specific operation the minimal rental period shall apply.) Minimal rental durations will be considered for equipment rented for specific project purposes,

.2 The Contractor shall not invoice for delivery or removal of the equipment to or from the job site,

.3 In no event shall the total payment paid by the Owner on any such piece of equipment exceed fifty percent (50%) of its purchase price.

(G) Subcontractor(s) shall comply with the requirements specified above for the Contractor regarding Changes.

Additions and Deletions Report for AIA Document A201® – 2007. Copyright © 1911, 1915, 1918, 1925, 1937, 1951, 1958, 1961, 1963, 1966, 1970, 1976, 1987, 1997 and 2007 by The American Institute of Architects. All rights reserved. The "American Institute of Architects," "AIA," the AIA Logo, "A201," and "AIA Contract Documents" are registered trademarks and may not be used without permission. This document was produced by AIA software at 12:23:28 ET on 11/11/2020 under Order No.6115176972 which expires on 09/19/2021, is not for resale, is licensed for one-time use only, and may only be used in accordance with the AIA Contract Documents® Terms of Service. To report copyright violations, e-mail copyright@aia.org.
User Notes:

§ 7.3.3 If the Construction Change Directive provides for an adjustment to the Contract Sum, the adjustment shall not exceed any requirements listed in Article 7 including all sub-sections and shall be based on one of the following methods:

...

§ 7.3.4 If unit prices are stated in the Contract Documents or subsequently agreed upon, and if quantities originally contemplated are materially changed in a proposed Change Order or Construction Change Directive so that application of such unit prices to quantities of Work proposed will cause substantial inequity to the Owner or Contractor, the applicable unit prices shall be equitably adjusted. Unit prices are all inclusive including cost of overhead profit, bond and insurance.

...

.1 ~~Costs of labor, including social security, old age and unemployment insurance, fringe benefits required by agreement or custom, and workers' compensation insurance;~~Wages for construction Workers, including supervisors, directly employed to perform the construction of the Work at the site. Unless otherwise agreed by Addendum to this Contract, labor burden shall be limited to: social security, old age and unemployment, Workmen's compensation, health and life insurance benefits, sick leave, holidays, military leave, vacation and pension and savings plan benefits;

...

.5 Additional costs of supervision and field office personnel directly attributable ~~to the change.~~to the change, provided, however, the Contractor shall provide an itemized breakdown showing quantities, unit costs, hours and rates of labor, and other costs and such detail as may be required to allow the reasonableness of cost to be established. Similar cost information covering Subcontractors' Work shall be included as a part of the Contractor's Proposal. Minimum charges for "handling" will not be acceptable. The allowable overhead and profit Mark-Ups to be included in the Total Cost to Owner shall be based on paragraph 7.2 and:

.1 In order to facilitate checking of quotations for extras or credits, all proposals, except those so minor that their propriety can be seen by inspection, shall be accompanied by a complete itemization of the cost including labor, materials and Subcontractors. Labor and materials shall be itemized in the manner prescribed above. Where major cost items are Subcontracts, they shall be itemized also. In no case will a charge involving over $500.00 be approved without such itemization.

.2 A Change Order must include each of the items listed in this Article 7. In the event there is no change in the Contract time or Contract amount, it must be noted that no such change is intended. A Change Order is all-inclusive, that is, a Change Order must indicate the change in Contract amount, including any overhead and profit. The Contractor cannot later request additional sums for a prior Change Order because it did not include overhead, profit, or similar items. If additional Contract time is indicated on the Change Order and the Contractor intends to claim any cost for time on any basis, the Change Order must include all additional costs, if any, associated with the additional time.

.3 Where both additions and credits are involved in any one Change Order the allowance of overhead and profit shall be figured on the basis of the net increase, if any.

§ 7.3.8 The amount of credit to be allowed by the Contractor to the Owner for a deletion or change that results in a net decrease in the Contract Sum shall be actual net cost as confirmed by the ~~Architect.~~ Architect and the credit shall be as required by Article 7 mark-up schedule. When both additions and credits covering related Work or substitutions are involved in a change, the allowance for overhead and profit shall be figured on the basis of net increase, if any, with respect to that ~~change.~~change per the mark-up schedule.

§ 7.3.9 Pending final determination of the ~~total~~ actual cost of a Construction Change Directive to the Owner, ~~the Contractor may request payment for Work completed under the Construction Change Directive in Applications for Payment. The Architect will make an interim determination for purposes of monthly certification for payment for those costs and certify for payment the amount that the Architect determines, in the Architect's professional judgment,~~

Additions and Deletions Report for AIA Document A201® – 2007. Copyright © 1911, 1915, 1918, 1925, 1937, 1951, 1958, 1961, 1963, 1966, 1970, 1976, 1987, 1997 and 2007 by The American Institute of Architects. All rights reserved. The "American Institute of Architects," "AIA," the AIA Logo, "A201," and "AIA Contract Documents" are registered trademarks and may not be used without permission. This document was produced by AIA software at 12:23:28 ET on 11/11/2020 under Order No.6115176972 which expires on 09/19/2021, is not for resale, is licensed for one-time use only, and may only be used in accordance with the AIA Contract Documents® Terms of Service. To report copyright violations, e-mail copyright@aia.org.
User Notes:

~~to be reasonably justified. The Architect's interim determination of cost shall adjust the Contract Sum on the same basis as a Change Order, subject to the right of either party to disagree and assert a Claim~~ amounts not in dispute for such changes in the Work shall be included in Applications for Payment accompanied by a Change Order indicating the parties' agreement with part or all of such costs. For any portion of such costs that remains in dispute, a Claim may be made in accordance with Article 15.

§ 7.3.10 When the Owner and Contractor agree with a determination made by the Architect concerning the adjustments in the Contract Sum and Contract Time, or ~~otherwise~~ reach agreement upon the adjustments, such agreement shall be effective immediately and the Architect will prepare a Change ~~Order.~~ Order otherwise, if Contractor is directed to proceed by Owner, the matter shall be considered a Claim under Article 15. Change Orders may be issued for all or any part of a Construction Change Directive.

PAGE 26

The Architect with the consent of the Owner has authority to order minor changes in the Work not involving adjustment in the Contract Sum or extension of the Contract Time and not inconsistent with the intent of the Contract Documents. Such changes will be effected by written order signed by the Architect and shall be binding on the Owner and Contractor.

...

§ 8.1.2 The date of commencement of the Work is the date established in the ~~Agreement.~~Agreement shall be fixed in a Notice to Proceed.

PAGE 27

§ 8.3.1 If the Contractor is delayed at any time in the commencement or progress of the Work by an act or neglect of the Owner or Architect, or of an employee of either, or of a separate contractor employed by the Owner; or by changes ordered in the Work; or by labor disputes, fire, unusual delay in deliveries, unavoidable casualties or other causes beyond the Contractor's control; or by delay authorized by the Owner pending mediation and ~~arbitration;~~ with consent of the Owner; or by other causes that the Architect determines may justify delay, then the Contract Time shall be extended by Change Order for such reasonable time as the Architect may determine. Contractor waives any all rights to any increased payments for delay damages, whether by Change Order or otherwise, to include overhead, extended overhead, extended general conditions, or for any other delay-based amounts of any kind or nature, for any delay by reason of the events referred to this in this subparagraph or any other event of any kind or nature. Contractor's remedy is limited to an extension of time as set forth herein.

...

§ 8.3.3 ~~This Section 8.3 does not preclude recovery of damages for delay by either party under other provisions of the Contract Documents.~~Is deleted.

...

~~Where the Contract is based on a stipulated sum or Guaranteed Maximum Price, the Contractor shall submit to the Architect, before the first Application for Payment, a schedule of values allocating the entire Contract Sum to the various portions of the Work and prepared in such form and supported by such data to substantiate its accuracy as the Architect may require. This schedule, unless objected to by the Architect, shall be used as a basis for reviewing the Contractor's Applications for Payment.~~**§ 9.2.1** Where the Contract is based on a stipulated sum or Guaranteed Maximum Price, the Contractor shall submit to the Architect and Owner, before the first Application for Payment, a schedule of values allocating the entire Contract Sum to the various portions of the Work and prepared in such form and supported by such data to substantiate its accuracy as the Architect or Owner may require. This schedule, unless objected to by the Architect, shall be used as a basis for reviewing the Contractor's Applications for Payment. The Schedule of Values shall be revised from time to time as may be necessary and due to the issuance of Change Orders or Construction Change Directives, the Contractor shall revise the Schedule of Values as requested by the Architect or Owner. The owner reserves the right to request the contractor to provide additional detail substantiating the schedule of values.

Additions and Deletions Report for AIA Document A201® – 2007. Copyright © 1911, 1915, 1918, 1925, 1937, 1951, 1958, 1961, 1963, 1966, 1970, 1976, 1987, 1997 and 2007 by The American Institute of Architects. All rights reserved. The "American Institute of Architects," "AIA," the AIA Logo, "A201," and "AIA Contract Documents" are registered trademarks and may not be used without permission. This document was produced by AIA software at 12:23:28 ET on 11/11/2020 under Order No.6115176972 which expires on 09/19/2021, is not for resale, is licensed for one-time use only, and may only be used in accordance with the AIA Contract Documents® Terms of Service. To report copyright violations, e-mail copyright@aia.org.
User Notes:

§ 9.2.2 The Contractor shall include a line item in the schedule of values for production of project record documents. The minimum value established for the record documents must not be less than ½ of 1% of the total Contract Value including accepted alternates.

...

§ 9.3.1 At least ten days before the date established for each progress payment, the Contractor shall submit to the Architect and Owner an itemized Application for Payment prepared in accordance with the schedule of values, if required under Section 9.2, for completed portions of the Work. Such application shall be ~~notarized, if required,~~ notarized and supported by such data substantiating the Contractor's right to payment as the Owner or Architect may require, such as copies of requisitions from Subcontractors and material suppliers, and shall reflect retainage ~~if~~ as provided for in the Contract Documents. Applications for Payment shall be based upon the Schedule of Values and shall be in a form and content satisfactory to the Owner. Each Application for Payment shall be accompanied by the following:

(a) Contractor's application and Cost Certification Statement, AIA Forms 702, 703 and IAC/PSCP Form No. 306.4, with attachment "G Certified Minority Business Enterprise Participation Standard Monthly Contractor's Requisition for Payment (June 2008 or current form)", and;

(b) A statement from the Contractor that all items of construction for which payment is sought have been incorporated into the Project were properly stored in accordance with the Contract Documents, and;

(c) the Contractors and applicable Subcontractors release of liens and waivers of claim and such other documents that the Owner may require after discussion with the Contractor, and;

(d) such other documentation that the Owner, Construction Manager, Architect may reasonably require after discussion with Contractor.

PAGE 28

§ 9.4.1 The Architect will, ~~within seven days~~ after receipt of the Contractor's Application for Payment, either issue to the Owner a Certificate for Payment, with a copy to the Contractor, for such amount as the Architect determines is properly due, or notify the Contractor and Owner in writing of the Architect's reasons for withholding certification in whole or in part as provided in Section 9.5.1.

PAGE 29

§ 9.5.2 When the above reasons for withholding certification are removed, certification will be made for amounts previously withheld after the contractor revises and resubmits a current application for payment including such amounts that were previously withheld.

...

§ 9.5.4 If the Contractor disputes any determination by the Architect or Owner with regard to any Applications for Payment, the Contractor shall nevertheless expeditiously continue to perform the Work and shall make claim as provided in Article 15.

§ 9.5.5 The Owner shall not be deemed to be in breach of this Contract by reason of the withholding of any payment pursuant to any provision of the Contract Documents provided the Architect has approved the Owner's action, or the Work for which payment is being withheld has been rejected by any Governmental authority.

PAGE 30

~~If~~ Subject to other provisions of the Contract Documents, if the Architect does not issue a Certificate for Payment, through no fault of the Contractor, within ~~seven~~ thirty days after receipt of the Contractor's Application for Payment, or if the Owner does not pay the Contractor within seven days after the date established in the Contract Documents the amount certified by the ~~Architect or awarded by binding dispute resolution,~~ Architect, then the Contractor may, upon seven additional days' written notice to the Owner and Architect, stop the Work until payment of the amount owing has been received. The Contract Time shall be extended appropriately and the Contract Sum shall be increased by the amount of the Contractor's ~~reasonable costs of shut-down, delay and start-up, plus interest as provided for in the Contract Documents.~~substantiated direct costs of shut-down. Article 9.7 shall not apply to Change Orders that have not received formal approval by the Board of Education of Frederick County, all such Change Orders shall not be included in Applications for Payment until the Contractor receives formal notification from the Owner that the Change

Additions and Deletions Report for AIA Document A201® – 2007. Copyright © 1911, 1915, 1918, 1925, 1937, 1951, 1958, 1961, 1963, 1966, 1970, 1976, 1987, 1997 and 2007 by The American Institute of Architects. All rights reserved. The "American Institute of Architects," "AIA," the AIA Logo, "A201," and "AIA Contract Documents" are registered trademarks and may not be used without permission. This document was produced by AIA software at 12:23:28 ET on 11/11/2020 under Order No.6115176972 which expires on 09/19/2021, is not for resale, is licensed for one-time use only, and may only be used in accordance with the AIA Contract Documents® Terms of Service. To report copyright violations, e-mail copyright@aia.org.
User Notes:

Order has received formal approval by the Board of Education of Frederick County and the contractor has completed the Change Order work.

...

§ 9.8.3 ~~Upon receipt of the Contractor's list, the Architect will make an inspection to determine whether the Work or designated portion thereof is substantially complete. If the Architect's inspection discloses any item, whether or not included on the Contractor's list, which is not sufficiently complete in accordance with the Contract Documents so that the Owner can occupy or utilize the Work or designated portion thereof for its intended use, the Contractor shall, before issuance of the Certificate of Substantial Completion, complete or correct such item upon notification by the Architect. In such case, the Contractor shall then submit a request for another inspection by the Architect to determine Substantial Completion.~~The comprehensive list of items to be completed or corrected ("Contractor's Punch List") prepared by the Contractor shall be submitted to the Owner and the Architect and the Owner shall be notified of inspections and be entitled to have an Owner's representative present at such inspections. All items that are disclosed during inspections not complying with the Contract Documents shall be added to the Contractor's Punch List and a copy of the Amended Punch List shall be submitted to the Owner and the Contractor. Any Certificate of Substantial Completion shall then be submitted making reference to the Punch List item, as either being completed to the Architect's satisfaction or shall fix a time within which the Contractor shall complete any remaining items. In the event the Contractor's Punch List is not completed by the date set forth in the Certificate of Substantial Completion, Owner has the option of deducting from balances due the Contractor an amount sufficient to compensate Owner for the cost of completing the Punch List. The amount to be deducted shall be determined in the sole discretion of Owner. Alternatively, Owner at its sole discretion may proceed to engage another Contractor to complete the Punch List Work with the cost thereof to include Owner's administrative costs, which costs shall be calculated in the sole discretion of the Owner, to be deducted from the amount retained and if the amount retained is insufficient, the Contractor is responsible to reimburse Owner the full amount of the uncovered cost. To the extent that multiple inspections may be required to determine whether the Work, or a designated portion thereof has attained substantial completion, the Owner shall be entitled to deduct from the Contract Sum any amounts which it must pay to the Architect for additional services for such additional inspections.

§ 9.8.4 When the Work or designated portion thereof ~~is~~ including Record Documents & Maintenance Manuals are substantially complete, the Architect will prepare a Certificate of Substantial Completion that shall establish the date of Substantial Completion, shall establish responsibilities of the Owner and Contractor for security, maintenance, heat, utilities, damage to the Work and insurance, and shall fix the time within which the Contractor shall finish all items on the list accompanying the Certificate. Warranties required by the Contract Documents shall commence on the date of Substantial Completion of the Work provided the contractor has completed all other contractual requirements stipulated to begin the warranty period or designated portion thereof unless otherwise provided in the Certificate of Substantial Completion.

PAGE 31

§ 9.10.2 Neither ~~final payment nor any remaining retained percentage shall become due until the~~ retainage payments nor final payment shall become due until all documents required by the Contract Documents and Article 5 of AIA 101 including (a)Maintenance Manuals, (b) Record Documents, (c) Instructions and Demonstrations have been provided and the Contractor submits to the Architect (1) an affidavit that payrolls, bills for materials and equipment, and other indebtedness connected with the Work for which the Owner or the Owner's property might be responsible or encumbered (less amounts withheld by Owner) have been paid or otherwise satisfied, (2) a certificate evidencing that insurance required by the Contract Documents to remain in force after final payment is currently in effect and will not be canceled or allowed to expire until at least 30 days' prior written notice has been given to the Owner, (3) a written statement that the Contractor knows of no substantial reason that the insurance will not be renewable to cover the period required by the Contract Documents, (4) consent of surety, if any, to final payment and ~~(5), if required by the Owner, other~~ (5)other data establishing payment or satisfaction of obligations, such as receipts, releases and waivers of liens, claims, security interests or encumbrances arising out of the Contract, to the extent and in such form as may be designated by the Owner. If a Subcontractor refuses to furnish a release or waiver required by the Owner, the Contractor may furnish a bond satisfactory to the Owner to indemnify the Owner against such lien. If such lien remains unsatisfied after payments are made, the Contractor shall refund to the Owner all money that the Owner may be compelled to pay in discharging such lien, including all costs and reasonable attorneys' fees.

PAGE 32

Additions and Deletions Report for AIA Document A201® – 2007. Copyright © 1911, 1915, 1918, 1925, 1937, 1951, 1958, 1961, 1963, 1966, 1970, 1976, 1987, 1997 and 2007 by The American Institute of Architects. All rights reserved. The "American Institute of Architects," "AIA," the AIA Logo, "A201," and "AIA Contract Documents" are registered trademarks and may not be used without permission. This document was produced by AIA software at 12:23:28 ET on 11/11/2020 under Order No.6115176972 which expires on 09/19/2021, is not for resale, is licensed for one-time use only, and may only be used in accordance with the AIA Contract Documents® Terms of Service. To report copyright violations, e-mail copyright@aia.org.
User Notes:

.2 defects in the Work or failure of the Work to comply with ~~the requirements of~~ the Contract Documents; or

...

§ 9.10.6 Under no circumstances shall final payment by the Owner constitute a waiver of defects in construction or failure of the Work to otherwise comply with the Contract Documents.

...

§ 10.2.4 When use or storage of explosives or other hazardous materials or equipment or unusual methods are necessary for execution of the Work, the Contractor shall give the Owner reasonable advance notice and exercise utmost care and carry on such activities under supervision of properly qualified personnel.

§ 10.2.4.1 If the Contract Documents require the Contractor to handle materials or substances that under certain circumstances may be designated as hazardous, the Contractor shall handle such materials in an appropriate manner and shall defend, indemnify, and hold Owner and Architect harmless from and against all claims, liabilities, suits, losses and damages arising out of or relating to such materials.

PAGE 35

§ 11.3.1 ~~Unless otherwise provided, the Owner~~ FCPS shall purchase and maintain, in a company or companies lawfully authorized to do business in the jurisdiction in which the Project is located, property insurance written on a builder's risk "all-risk" or equivalent policy form in the amount of the initial Contract Sum, plus value of subsequent Contract Modifications and cost of materials supplied or installed by others, comprising total value for the entire Project at the site on a replacement cost basis ~~without optional~~ with deductibles. Such property insurance shall be maintained, unless otherwise provided in the Contract Documents or otherwise agreed in writing by all persons and entities who are beneficiaries of such insurance, until final payment has been made as provided in Section 9.10 or until no person or entity other than the Owner has an insurable interest in the property required by this Section 11.3 to be covered, whichever is later. This insurance shall include interests of the Owner, the Contractor, Subcontractors and Sub-subcontractors in the Project.

...

§ 11.3.1.2 ~~If the Owner does not intend to purchase such property insurance required by the Contract and with all of the coverages in the amount described above, the Owner shall so inform the Contractor in writing prior to commencement of the Work. The Contractor may then effect insurance that will protect the interests of the Contractor, Subcontractors and Sub-subcontractors in the Work, and by appropriate Change Order the cost thereof shall be charged to the Owner. If the Contractor is damaged by the failure or neglect of the Owner to purchase or maintain insurance as described above, without so notifying the Contractor in writing, then the Owner shall bear all reasonable costs properly attributable thereto.~~Is Deleted.

...

The Owner, at the Owner's option, may purchase and maintain such insurance as will insure the Owner against loss of use of the Owner's property due to fire or other hazards, however caused. ~~The Owner waives all rights of action against the Contractor for loss of use of the Owner's property, including consequential losses due to fire or other hazards however caused.~~

PAGE 36

§ 11.3.10 The Owner as fiduciary shall have power to adjust and settle a loss with insurers unless one of the parties in interest shall object in writing within five days after occurrence of loss to the Owner's exercise of this power; if such objection is made, the dispute shall be resolved in the manner ~~selected by the Owner and Contractor as the method of binding dispute resolution in the Agreement. If the Owner and Contractor have selected arbitration as the method of binding dispute resolution, the Owner as fiduciary shall make settlement with insurers or, in the case of a dispute over~~

Additions and Deletions Report for AIA Document A201® – 2007. Copyright © 1911, 1915, 1918, 1925, 1937, 1951, 1958, 1961, 1963, 1966, 1970, 1976, 1987, 1997 and 2007 by The American Institute of Architects. All rights reserved. The "American Institute of Architects," "AIA," the AIA Logo, "A201," and "AIA Contract Documents" are registered trademarks and may not be used without permission. This document was produced by AIA software at 12:23:28 ET on 11/11/2020 under Order No.6115176972 which expires on 09/19/2021, is not for resale, is licensed for one-time use only, and may only be used in accordance with the AIA Contract Documents® Terms of Service. To report copyright violations, e-mail copyright@aia.org.
User Notes: (1517250872)

~~distribution of insurance proceeds, in accordance with the directions of the arbitrators.~~ as required this by Agreement. No decision of the Architect shall be required.

...

§ 12.1.2 If a portion of the Work has been covered that the Architect has not specifically requested to examine prior to its being covered, the Architect may request to see such Work and it shall be uncovered by the Contractor. If such Work is in accordance with the Contract Documents, costs of uncovering and replacement shall, by appropriate Change Order, be at the Owner's expense. If ~~such~~ Work is not in accordance with the Contract Documents, such costs and the cost of correction shall be at the Contractor's expense unless the condition was caused by the Owner or a separate contractor in which event the Owner shall be responsible for payment of such costs. The cost to repair nonconforming work shall be considered a latent defect and the contractor responsible for the work or as appropriate the damage to the work shall be responsible for the cost to make repairs to said work and return the uncovered work to the condition before the work was uncovered.

PAGE 37

The Contractor ~~shall promptly correct Work rejected by the Architect or failing to conform to the requirements of the Contract Documents, whether discovered before or after Substantial Completion and whether or not fabricated, installed or completed. Costs of correcting such rejected Work, including additional testing and inspections, the cost of uncovering and replacement, and compensation for the Architect's services and expenses made necessary thereby, shall be at the Contractor's expense.~~ and its surety shall have the right to remedy any defects in the Work on materials which shall appear within a period of two (2) year from the date of Substantial Completion. Upon written notice from the Owner, the Contractor and surety shall promptly provide said remedy after notice from the Owner. If said remedy is not promptly provided, the Owner shall have the right to correct said defects and charge the Contractor and its surety for the same.

...

§ 12.2.2.1 In addition to the Contractor's obligations under Section 3.5, if, within ~~one year~~ two-years after the date of Substantial Completion of the Work or designated portion thereof or after the date for commencement of warranties established under Section 9.9.1, or by terms of an applicable special warranty required by the Contract Documents, any of the Work is found to be not in accordance with the requirements of the Contract Documents, the Contractor shall correct it promptly after receipt of written notice from the Owner to do so unless the Owner has previously given the Contractor a written acceptance of such condition. The Owner shall give such notice promptly after discovery of the condition. During the ~~one year~~ two-year period for correction of Work, if the Owner fails to notify the Contractor and give the Contractor an opportunity to make the correction, the Owner waives the rights to require correction by the Contractor and to make a claim for breach of warranty. If the Contractor fails to correct nonconforming Work within ~~a reasonable time during that period~~ five working days after receipt of notice from the Owner or Architect, the Owner may correct it in accordance with Section 2.4. If the Contractor does not proceed with correction of such nonconforming Work within five working days fixed by written notice from the Architect the Owner may remove it and store the salvable materials or equipment at the Contractor's expense. If the Contractor does not pay costs of such removal and storage within three days after written notice, the Owner may upon ten additional days' written notice sell such materials and equipment at auction or at private sale and shall account for the proceeds thereof, after deducting costs and damages that should have been borne by the Contractor, including compensation for the Owner's and Architect's services and expenses made necessary thereby. If such proceeds of sale do not cover costs which the Contractor should have borne, the Contract Sum shall be reduced by the deficiency. If payments then or thereafter due the Contractor are not sufficient to cover such amount, the Contractor shall pay the difference to the Owner.

§ 12.2.2.2 The ~~one-year~~ two-year period for correction of Work shall be extended with respect to portions of Work first performed after Substantial Completion by the period of time between Substantial Completion and the actual completion of that portion of the Work.

§ 12.2.2.3 The ~~one-year~~ two-year period for correction of Work shall not be extended by corrective Work performed by the Contractor pursuant to this Section 12.2.

...

Additions and Deletions Report for AIA Document A201® – 2007. Copyright © 1911, 1915, 1918, 1925, 1937, 1951, 1958, 1961, 1963, 1966, 1970, 1976, 1987, 1997 and 2007 by The American Institute of Architects. All rights reserved. The "American Institute of Architects," "AIA," the AIA Logo, "A201," and "AIA Contract Documents" are registered trademarks and may not be used without permission. This document was produced by AIA software at 12:23:28 ET on 11/11/2020 under Order No.6115176972 which expires on 09/19/2021, is not for resale, is licensed for one-time use only, and may only be used in accordance with the AIA Contract Documents® Terms of Service. To report copyright violations, e-mail copyright@aia.org.
User Notes:

§ 12.2.5 Nothing contained in this Section 12.2 shall be construed to establish a period of limitation with respect to other obligations the Contractor has under the Contract Documents. Establishment of the ~~one-year~~ two-year period for correction of Work as described in Section 12.2.2 relates only to the specific obligation of the Contractor to correct the Work, and has no relationship to the time within which the obligation to comply with the Contract Documents may be sought to be enforced, nor to the time within which proceedings may be commenced to establish the Contractor's liability with respect to the Contractor's obligations other than specifically to correct the Work.
PAGE 38

The Contract shall be governed by the law of ~~the place where the Project is located except that, if the parties have selected arbitration as the method of binding dispute resolution, the Federal Arbitration Act shall govern Section 15.4.~~The State of Maryland.

...

§ 13.2.1 The Owner and Contractor respectively bind themselves, their partners, successors, assigns and legal representatives to covenants, agreements and obligations contained in the Contract Documents. ~~Except as provided in Section 13.2.2, neither party to the Contract shall assign the Contract as a whole without written consent of the other.~~ If either party attempts to make such an assignment without such consent, that party shall nevertheless remain legally responsible for all obligations under the Contract.

§ 13.2.2 ~~The Owner may, without consent of the Contractor, assign the Contract to a lender providing construction financing for the Project, if the lender assumes the Owner's rights and obligations under the Contract Documents. The Contractor shall execute all consents reasonably required to facilitate such assignment.~~Is Deleted.
PAGE 39

§ 13.5.7 No tests or inspections or results thereof shall constitute an acceptance of any Work not conforming to the requirements of Contract Documents.

~~Payments due and unpaid under the Contract Documents shall bear interest from the date payment is due at such rate as the parties may agree upon in writing or, in the absence thereof, at the legal rate prevailing from time to time at the place where the Project is located.~~Interest payments will not be required for late payments under the terms of this Contract.

...

~~The Owner and Contractor shall commence all claims and causes of action, whether in contract, tort, breach of warranty or otherwise, against the other arising out of or related to the Contract in accordance with the requirements of the final dispute resolution method selected in the Agreement within the time period specified by applicable law, but in any case not more than 10 years after the date of Substantial Completion of the Work. The Owner and Contractor waive all claims and causes of action not commenced in accordance with this Section 13.7.~~Commencement of Statutory Limitations Period and Statute of Repose shall be in accordance with the laws of the State of Maryland.

§ 13.8 EQUAL OPPORTUNITY
§13.8.1 The Contractor shall maintain minimum policies of employment as follows:

§13.8.1.1 The Contractor and the Contractor's Subcontractors shall not discriminate against any employee or applicant for employment because of race, religion, color, sex or national origin. The Contractor shall take affirmative action to ensure that applicants are employed, and that employees are treated during employment without regard to their race, religion, color, sex or national origin. Such action shall include, but not be limited to, the following: employment, upgrading, demotion or transfer; recruitment or recruitment advertising; layoff or termination; rates of pay or other forms of compensation; and selection for training, including apprenticeship. The Contractor agrees to post in conspicuous places, available to employees and applicants for employment, notices setting forth the policies of nondiscrimination.

§13.8.1.2 The Contractor and the Contractor's Subcontractors shall, in all solicitations or advertisements for employees placed by them or on their behalf, state that all qualified applicants will receive consideration for employment without regard to race, religion, color, sex or national origin.

Additions and Deletions Report for AIA Document A201® – 2007. Copyright © 1911, 1915, 1918, 1925, 1937, 1951, 1958, 1961, 1963, 1966, 1970, 1976, 1987, 1997 and 2007 by The American Institute of Architects. All rights reserved. The "American Institute of Architects," "AIA," the AIA Logo, "A201," and "AIA Contract Documents" are registered trademarks and may not be used without permission. This document was produced by AIA software at 12:23:28 ET on 11/11/2020 under Order No.6115176972 which expires on 09/19/2021, is not for resale, is licensed for one-time use only, and may only be used in accordance with the AIA Contract Documents® Terms of Service. To report copyright violations, e-mail copyright@aia.org.
User Notes:

...

§ 14.1.1 The Contractor may terminate the Contract if the Work is stopped for a period of ~~30~~ 120 consecutive days through no act or fault of the Contractor or a Subcontractor, Sub-subcontractor or their agents or employees or any other persons or entities performing portions of the Work under direct or indirect contract with the Contractor, for any of the following reasons:

...

.4 ~~The Owner has failed to furnish to the Contractor promptly, upon the Contractor's request, reasonable evidence as required by Section 2.2.1.~~Is Deleted.

...

§ 14.1.3 If one of the reasons described in Section 14.1.1 or 14.1.2 exists, the Contractor may, upon seven days' written notice to the Owner and Architect, terminate the Contract and recover from the Owner payment ~~for Work executed, including reasonable overhead and profit, costs incurred by reason of such termination, and damages.~~ as set forth in the provisions of this Agreement regarding termination by the Owner for convenience.

§ 14.1.4 ~~If the Work is stopped for a period of 60 consecutive days through no act or fault of the Contractor or a Subcontractor or their agents or employees or any other persons performing portions of the Work under contract with the Contractor because the Owner has repeatedly failed to fulfill the Owner's obligations under the Contract Documents with respect to matters important to the progress of the Work, the Contractor may, upon seven additional days' written notice to the Owner and the Architect, terminate the Contract and recover from the Owner as provided in Section 14.1.3.~~Is Deleted.

PAGE 40

.1 ~~repeatedly refuses~~ refuses or fails to supply enough properly skilled workers or proper materials;

...

.3 ~~repeatedly disregards~~ disregards applicable laws, statutes, ordinances, codes, rules and regulations, or lawful orders of a public authority; or

...

§ 14.2.5 In the event that is adjusted that the Owner's termination for cause is not justified, then the Termination shall be deemed to be a termination by the Owner for convenience and the Contractor shall be entitled to compensation as only set forth in the provisions of this Agreement regarding termination by Owner for Convenience.

...

§ 14.4.1 The Owner may, at any time, terminate the Contract for the Owner's convenience and without cause. At its option the Owner may terminate this Contract in whole or from time to time in part at any time by written notice thereof to the Contractor. Upon any such termination, Contractor agrees to waive any claims for damages, including loss of anticipated profits, on account thereof, and as the sole right and remedy of the Contractor, Owner shall pay Contractor in accordance with 14.4.2 below. The provisions of the Contract, which by their nature survive final acceptance of the Work, shall remain in full force and effect after such termination to include but not limited to warranties and obligations for the correction of Work not confirming to the Contract Documents. Upon receipt of the Termination Notice, Contractor shall, unless the Notice direct otherwise, immediately discontinue the Work and, to the extent specified in the Notice, place no further orders or subcontracts for materials, equipment, services, or facilities and shall promptly make every reasonable effort to procure cancellation of such orders or subcontracts upon terms satisfactory to the Owner and shall thereafter do only such Work and perform such services as may be directed by the Owner as necessary to preserve and protect Work already in progress and to protect materials, plans and equipment on the Site or in transit thereto. Upon such termination, the obligations of the Contractor shall continue as

Additions and Deletions Report for AIA Document A201® – 2007. Copyright © 1911, 1915, 1918, 1925, 1937, 1951, 1958, 1961, 1963, 1966, 1970, 1976, 1987, 1997 and 2007 by The American Institute of Architects. All rights reserved. The "American Institute of Architects," "AIA," the AIA Logo, "A201," and "AIA Contract Documents" are registered trademarks and may not be used without permission. This document was produced by AIA software at 12:23:28 ET on 11/11/2020 under Order No.6115176972 which expires on 09/19/2021, is not for resale, is licensed for one-time use only, and may only be used in accordance with the AIA Contract Documents® Terms of Service. To report copyright violations, e-mail copyright@aia.org.
User Notes:

to portions of the Work already performed and as to bona fide obligations assumed by the Contractor prior to the date of termination.

PAGE 41

§ 14.4.3 ~~In case of such termination for the Owner's convenience, the Contractor shall be entitled to receive payment for Work executed, and costs incurred by reason of such termination, along with reasonable overhead and profit on the Work not executed.~~Upon Termination for Convenience, the provisions of the Contract, which by their nature, survive any final acceptance of the Work, shall remain in full force and effect after such termination to include but not limited to warranties and obligations for the correction of Work not conforming to the Contract Documents. Upon receipt of the Termination Notice, Contractor shall, unless the Notice directs otherwise, immediately discontinue the Work and, to the extent specified in the Notice, place no future orders or Subcontracts for materials, equipment, services or facilities and shall promptly make every reasonable effort to procure cancellation of such orders or Subcontracts upon terms satisfactory to the Owner and shall thereafter do only such Work and perform such services as may be directed by the Owner as necessary to preserve and protect Work already in progress and to protect materials, plant and equipment on the site or in transit thereto. Upon termination, Contractor shall be entitled to be paid the full cost of all Work properly done by Contractor on account of the portion of Work Performed. If at the date of such termination, Contractor has properly prepared or fabricated off the site any goods for subsequent incorporation in the Work, and if Contractor delivers such goods to the Site or to such other place as the Owner shall reasonably direct, then Contractor shall be paid for such goods or materials. No other payment shall be made by reason of damages or otherwise, including but not limited to loss of anticipated profits, overhead, or any other claim or amount whatsoever.

...

Claims by ~~either~~ the ~~Owner or~~ Contractor must be ~~initiated~~ made by written notice to the ~~other party~~ Owner and to the Initial Decision Maker with a copy sent to the Architect, if the Architect is not serving as the Initial Decision Maker. Claims by ~~either party~~ Contractor must be ~~initiated~~ made within 21 days after occurrence of the event giving rise to such Claim or within 21 days after the ~~claimant~~ Contractor first recognizes the condition giving rise to the Claim, whichever is later. Contractor claim(s) shall not be valid unless made in strict accordance with this subparagraph.

...

If the Contractor wishes to make a Claim for an increase in the Contract Sum, written notice as provided herein shall be given before proceeding to execute the Work. Prior notice is not required for Claims relating to an emergency endangering life or property arising under Section 10.4. A Claim must be processed as defined herein, Article 15 and comply with all requirements of Article 7

PAGE 42

§ 15.1.5.1 If the Contractor wishes to make a Claim for an increase in the Contract Time, written notice as provided herein shall be given. ~~The Contractor's Claim shall include an estimate of cost and of probable effect of delay on progress of the Work. In the case of a continuing delay, only one Claim is necessary.~~No claim for delay damages of any kind or nature shall be valid and no such damages shall be paid by the Owner except upon Owner's written consent which consent is in the sole and absolute discretion of the Owner. No written consent by Owner to damages for one period of delay, entitle Contractor to damages for any other period of delay. A Claim for additional time must be for adverse weather conditions and the actual conditions must exceed the cumulative monthly adverse weather day totals indicated in 15.1.5.2.

§ 15.1.5.2 If adverse weather conditions are the basis for a Claim for additional time, the time must exceed the time as defined in the schedule below, such Claim shall be documented by data substantiating that weather conditions were abnormal for the period of time, exceeded the schedule below and could not have been reasonably anticipated and had an adverse effect on the scheduled construction. The State of Maryland, Department of General Services, Special Provisions Section of Hagerstown, Maryland will be used in the calculation of the monthly anticipated adverse weather delays. The monthly-anticipated adverse weather delays are as follows, in workdays. The Contractor's schedule must reflect these anticipated adverse weather delay days in weather dependent activities:

Jan	Feb	March	April	May	June	July	Aug	Sept	Oct	Nov	Dec
8	7	7	8	8	7	5	6	4	6	5	5

In any event, Contractor's Claim(s) for delay in the performance of the Work due to adverse weather conditions is strictly limited to a Claim for additional for additional time only. In no event shall the Contractor be entitled to

Additions and Deletions Report for AIA Document A201® – 2007. Copyright © 1911, 1915, 1918, 1925, 1937, 1951, 1958, 1961, 1963, 1966, 1970, 1976, 1987, 1997 and 2007 by The American Institute of Architects. All rights reserved. The "American Institute of Architects," "AIA," the AIA Logo, "A201," and "AIA Contract Documents" are registered trademarks and may not be used without permission. This document was produced by AIA software at 12:23:28 ET on 11/11/2020 under Order No.6115176972 which expires on 09/19/2021, is not for resale, is licensed for one-time use only, and may only be used in accordance with the AIA Contract Documents® Terms of Service. To report copyright violations, e-mail copyright@aia.org.
User Notes:

monetary damages or any other compensation as a result of a delay in the performance of the Work due to adverse weather conditions.

PAGE 43

§ 15.2.5 The Initial Decision Maker will render an initial decision approving or rejecting the Claim, or indicating that the Initial Decision Maker is unable to resolve the Claim. This initial decision shall (1) be in writing; (2) state the reasons therefor; and (3) notify the parties and the Architect, if the Architect is not serving as the Initial Decision Maker, of any change in the Contract Sum or Contract Time or both. The initial decision shall be ~~final and binding on the parties but~~ subject to mediation and, if the parties fail to resolve their dispute through mediation, ~~to binding dispute resolution.~~the claim shall be resolved by litigation.

...

§ 15.2.6.1 Either party may, within 30 days from the date of an initial decision, demand in writing that the other party file for mediation within 60 days of the initial decision. If such a demand is made and the party receiving the demand fails to file for mediation within the time required, then both parties waive their rights to mediate or pursue ~~binding dispute resolution proceedings~~ litigation with respect to the initial decision.

...

§ 15.3.2 The parties shall endeavor to resolve their Claims by mediation which, unless the parties mutually agree otherwise, shall be administered by the American Arbitration Association in accordance with its Construction Industry Mediation Procedures in effect on the date of the Agreement. A request for mediation shall be made in writing, delivered to the other party to the Contract, and filed with the person or entity administering the mediation. The request may be made concurrently with the filing of ~~binding dispute resolution~~ litigation proceedings but, in such event, mediation shall proceed in advance of ~~binding dispute resolution~~ litigation proceedings, which shall be stayed pending mediation for a period of 60 days from the date of filing, unless stayed for a longer period by agreement of the parties or court order. ~~If an arbitration is stayed pursuant to this Section 15.3.2, the parties may nonetheless proceed to the selection of the arbitrator(s) and agree upon a schedule for later proceedings.~~

...

§ 15.4 ARBITRATION is deleted and replaced with Litigation as follows,
All disputes and other matters in question between the parties to this Agreement which cannot be resolved by the parties in accordance with the terms of this Agreement shall be referred to legal counsel and resolved in the Circuit Court for Frederick County, Maryland and all parties hereto agree to submit themselves to the jurisdiction of that Court. During any legal proceedings or other dispute resolution proceedings which may be agreed to between the parties, Owner and Contractor shall comply with sub-paragraph 4.74.
~~**§ 15.4.1** If the parties have selected arbitration as the method for binding dispute resolution in the Agreement, any Claim subject to, but not resolved by, mediation shall be subject to arbitration which, unless the parties mutually agree otherwise, shall be administered by the American Arbitration Association in accordance with its Construction Industry Arbitration Rules in effect on the date of the Agreement. A demand for arbitration shall be made in writing, delivered to the other party to the Contract, and filed with the person or entity administering the arbitration. The party filing a notice of demand for arbitration must assert in the demand all Claims then known to that party on which arbitration is permitted to be demanded.~~

~~**§ 15.4.1.1** A demand for arbitration shall be made no earlier than concurrently with the filing of a request for mediation, but in no event shall it be made after the date when the institution of legal or equitable proceedings based on the Claim would be barred by the applicable statute of limitations. For statute of limitations purposes, receipt of a written demand for arbitration by the person or entity administering the arbitration shall constitute the institution of legal or equitable proceedings based on the Claim.~~

~~**§ 15.4.2** The award rendered by the arbitrator or arbitrators shall be final, and judgment may be entered upon it in accordance with applicable law in any court having jurisdiction thereof.~~

Additions and Deletions Report for AIA Document A201® – 2007. Copyright © 1911, 1915, 1918, 1925, 1937, 1951, 1958, 1961, 1963, 1966, 1970, 1976, 1987, 1997 and 2007 by The American Institute of Architects. All rights reserved. The "American Institute of Architects," "AIA," the AIA Logo, "A201," and "AIA Contract Documents" are registered trademarks and may not be used without permission. This document was produced by AIA software at 12:23:28 ET on 11/11/2020 under Order No.6115176972 which expires on 09/19/2021, is not for resale, is licensed for one-time use only, and may only be used in accordance with the AIA Contract Documents® Terms of Service. To report copyright violations, e-mail copyright@aia.org.
User Notes:

~~**§ 15.4.3** The foregoing agreement to arbitrate and other agreements to arbitrate with an additional person or entity duly consented to by parties to the Agreement shall be specifically enforceable under applicable law in any court having jurisdiction thereof.~~

~~**§ 15.4.4 CONSOLIDATION OR JOINDER**~~

~~**§ 15.4.4.1** Either party, at its sole discretion, may consolidate an arbitration conducted under this Agreement with any other arbitration to which it is a party provided that (1) the arbitration agreement governing the other arbitration permits consolidation, (2) the arbitrations to be consolidated substantially involve common questions of law or fact, and (3) the arbitrations employ materially similar procedural rules and methods for selecting arbitrator(s).~~

~~**§ 15.4.4.2** Either party, at its sole discretion, may include by joinder persons or entities substantially involved in a common question of law or fact whose presence is required if complete relief is to be accorded in arbitration, provided that the party sought to be joined consents in writing to such joinder. Consent to arbitration involving an additional person or entity shall not constitute consent to arbitration of any claim, dispute or other matter in question not described in the written consent.~~

~~**§ 15.4.4.3** The Owner and Contractor grant to any person or entity made a party to an arbitration conducted under this Section 15.4, whether by joinder or consolidation, the same rights of joinder and consolidation as the Owner and Contractor under this Agreement.~~

Additions and Deletions Report for AIA Document A201® – 2007. Copyright © 1911, 1915, 1918, 1925, 1937, 1951, 1958, 1961, 1963, 1966, 1970, 1976, 1987, 1997 and 2007 by The American Institute of Architects. All rights reserved. The "American Institute of Architects," "AIA," the AIA Logo, "A201," and "AIA Contract Documents" are registered trademarks and may not be used without permission. This document was produced by AIA software at 12:23:28 ET on 11/11/2020 under Order No.6115176972 which expires on 09/19/2021, is not for resale, is licensed for one-time use only, and may only be used in accordance with the AIA Contract Documents® Terms of Service. To report copyright violations, e-mail copyright@aia.org.
User Notes:

Certification of Document's Authenticity

AIA® Document D401™ – 2003

I, , hereby certify, to the best of my knowledge, information and belief, that I created the attached final document simultaneously with its associated Additions and Deletions Report and this certification at 12:23:28 ET on 11/11/2020 under Order No. 6115176972 from AIA Contract Documents software and that in preparing the attached final document I made no changes to the original text of AIA® Document A201™ – 2007, General Conditions of the Contract for Construction, as published by the AIA in its software, other than those additions and deletions shown in the associated Additions and Deletions Report.

_____

(Signed)

_____

(Title)

_____

(Dated)

AIA Document D401™ – 2003. Copyright © 1992 and 2003 by The American Institute of Architects. All rights reserved. The "American Institute of Architects," "AIA," the AIA Logo, and "AIA Contract Documents" are registered trademarks and may not be used without permission. This document was produced by AIA software at 12:23:28 ET on 11/11/2020 under Order No.6115176972 which expires on 09/19/2021, is not for resale, is licensed for one-time use only, and may only be used in accordance with the AIA Contract Documents® Terms of Service. To report copyright violations, e-mail copyright@aia.org.
User Notes: (1517250872)

BID 21C5, LINCOLN A FACILITY ROOF REPLACEMENT PROJECT
FREDERICK COUNTY PUBLIC SCHOOLS

STATUTORY AFFIDAVIT AND NON-COLLUSION CERTIFICATION

Special Instructions: An authorized representative of the bidder needs to complete the following affidavit and insert an answer to paragraphs 1 and 3.

BIDDERS: The submission of the following Affidavit at the time of the bid opening is:

[X] requested to be completed but not required to be notarized.

[ ] required to be completed and notarized.

I, _____, being duly sworn, depose and state:

1. I am the _____ (officer) and duly authorized representative of the firm of

   the organization named _____ whose address is
   (Name of Corporation)
   _____ and that I

   possess the authority to make this affidavit and certification on behalf of myself and the firm for which I am acting.

2. Except as described in paragraph 3 below, neither I, nor to the best of my knowledge, the above firm, nor any of its officers, directors, or partners, or any of its employees who are directly involved in obtaining or performing contracts with any public bodies has:

   a. been convicted of bribery, attempted bribery, or conspiracy to bribe, under the laws of any state or of the federal government;

   b. been convicted under the laws of the state, another state, or the United States of: a criminal offense incident to obtaining, attempting to obtain, or performing a public or private contract; or fraud, embezzlement, theft, forgery, falsification or destruction of records, or receiving stolen property;

   c. been convicted of criminal violation of an antitrust statute of the State of Maryland, another state, or the United States;

   d. been convicted of a violation of the Racketeer influenced and Corrupt Organization Act, or the Mail Fraud Act, for acts in connection with the submission of bids or proposals for a public or private contract;

   e. been convicted of any felony offenses connected with obtaining, holding, or maintaining a minority business enterprise certification, as prohibited by Section 14-308 of the State Finance & Procurement Article;

   f. been convicted of conspiracy to commit any act or omission that would constitute grounds for conviction under any of the laws or statutes described in Paragraph (a) through (e) above; or

   g. been found civilly liable under an antitrust statute of this State, another state, or the United States for acts or omissions in connection with the submission of bids or proposals for a public or private contract.

3. The only conviction, plea, or admission by any officer, director, partner, or employee of this firm to involvement in any of the conduct described in Paragraph 2 above is as follows:

If none, write "None" below. If involvement, list the date, count, or charge, official or administrative body, the individuals involved, their position with the firm, and the sentence or disposition of the charge.

_____

_____

(you may attach an explanation if necessary)

4. I affirm that this firm will not knowingly enter into a contract with a public body under which a person or business debarred or suspended under Maryland State Finance and Procurement Title 16, subtitle 3, Annotated Code of Maryland, as amended, will provide, directly or indirectly, supplies, services, architectural services, construction-related services, leases of real property, or construction.

5. I affirm that this proposal or bid to the Board of Education of Frederick County is genuine and not collusive or a sham; that said bidder has not colluded, conspired, connived and agreed, directly or indirectly, with any bidder or person to put in a sham bid or to refrain from bidding and is not in any manner, directly or indirectly, sought by agreement of collusion or communication or conference, with any person to fix the bid prices of the affidavit or any other bidder, or to fix any overhead, profit or cost element of said bid price, or that if any bidder, or to secure an advantage against the Board of Education of Frederick County or any other person interested in the proposed contract; and that all statements in the proposal or bid are true. I acknowledge that, if the representations set forth in this affidavit are not true and correct, the Board of Education of Frederick County may terminate any contract awarded and take any other appropriate action.

I DO SOLEMNLY DECLARE AND AFFIRM under the penalties of perjury that the contents of this affidavit are true and correct, that I am executing this Affidavit in compliance with Section 16-311 of the State Finance and Procurement Article, Annotated Code of Maryland, and in compliance with requirements of the Board of Education of Frederick County, and that I am executing and submitting this Proposal on behalf of and as authorized by the bidder named below.

_____
(Legal Name of Company)

_____
(dba)

_____
(Address)

_____
(City) (State) (Zip)

_____
(Telephone) (Fax)

_____
(Print Name) (Title) (Date)

_____
(Signature) (Title) (Date)

We are/I am licensed to do business in the State of Maryland as a:
( ) Corporation ( ) Partnership ( ) Individual ( ) Other

If required to be notarized:

_____ _____
(Witness) (Title)

SUBSCRIBED AND SWORN to before me on this _____day of _____, 20___.

_____
NOTARY PUBLIC

My Commission Expires: _____

BID 21C5, LINCOLN A FACILITY ROOF REPLACEMENT PROJECT
FREDERICK COUNTY PUBLIC SCHOOLS

CERTIFICATION OF COMPLIANCE

1. All Contractors, subcontractors or vendors must abide by FCPS Board policies and regulations while working on FCPS property.

2. Maryland Law requires that any person who enters into a contract with a county board of education may not knowingly employ an individual to work at a school (or FCPS facility) if the individual is a registered sex offender. Please reference §11-113 of the Criminal Procedure Article of Maryland Code for penalty.

3. Be advised that individuals who are registered sex offenders are not eligible to work on any FCPS project. The Contractor must initially check the Maryland Department of Public Safety & Correctional Services' MARYLAND SEX OFFENDER REGISTRY and search for the name of any employee to be assigned to work on this project. This applies to subcontractors and material/equipment suppliers as well.

4. In the event that a registered sex offender is discovered to be working on a FCPS project, whether through employment by the prime Contractor, subcontractor or vendor, the site superintendent will immediately remove the individual from the premises and permanently terminate his work assignment. FCPS may terminate this contract as a result if the Contractor is unable to demonstrate he has exercised care and diligence in the past in checking the Maryland registry.

5. Effective July 1, 2015, amendments to §6-113 of the Education Article of the Maryland Code further require that a contractor or subcontractor or vendor for a local school system may not knowingly assign an employee to work on school premises with direct, unsupervised, and uncontrolled access to children, if the employee has been convicted of, or pled guilty or nolo contendere to, a crime involving:

    a. A sexual offense in the third or fourth degree under §3-307 or §3-308 of the Criminal Law Article of the Maryland Code.

    b. Child sexual abuse under §3-602 of the Criminal Law Article of the Maryland Code or any other State; or

    c. A crime of violence as defined in §14-101 of the Criminal Law Article of the Maryland Code or any other State

6. With the passing of Maryland Law MD. Code, Educ. 6-113.2, employers of all contracted staff must obtain background information relating to child sexual abuse or sexual misconduct. This means that all contracted staff having direct contact with students must meet all of the FCPS and Maryland State Department of Education (MSDE) requirements before doing business with FCPS. See: Maryland State Department of Education Website; House Bill 486 Child Sexual Abuse and Sexual Misconduct Prevention; MSDE Guidelines For MD. Code, Educ. 6113.2; and Employment History Review Form for Child Abuse and Sexual Misconduct for additional information.

    In addition, there has been no change to the current FCPS requirement, that all contracted staff who have contact with students are required to be fingerprinted in order to obtain a criminal background check. Fingerprints and background check are still an enforced FCPS requirement.

7. Under recent amendments to §5-561 of the Family Law Article of the Maryland Code, each contractor, subcontractor, or vendor shall certify by signing this affidavit that any individuals in its work-force including sub-contractors, have undergone a criminal background check, including fingerprinting, if the individuals will work in a FCPS school facility in circumstances where they have direct, unsupervised, and uncontrolled access to children.

By my signature below, I affirm under penalties of perjury that the contents of this Certification of Compliance are true to the best of my knowledge, information and belief.

Signature_____Date_____

Print name and title of
signatory_____

Print name of
company_____

Vendor Conflict of Interest Disclosure Form

All vendors interested in conducting business with Frederick County Public Schools (FCPS) must complete and return the Vendor Conflict of Interest Disclosure Form, in order to be eligible to be awarded a contract with FCPS.

Please note that all vendors must comply with FCPS's conflict of interest certification, as stated below.

If a vendor has a relationship with a FCPS employee or an immediate family member (spouse, child (stepchild or adopted), parent, or sibling) of a FCPS employee, the vendor shall disclose the information required below.

Certification: I hereby certify, that to the best of my knowledge, there is no conflict of interest involving the vendor named below:

1. No FCPS employee or the employee's immediate family member has an ownership interest in the vendor's company, or is deriving personal financial gain from this contract.
2. No retired or separated FCPS employee who has been retired or separated from the organization for less then one (1) year has an ownership interest in the vendor's company.
3. No FCPS employee is contemporaneously employed or prospectively to be employed with the vendor.
4. The vendor did not provide any information or criteria in the drafting of the solicitation prior to it being advertised for competitive pricing.
5. Vendor hereby declares it has not, and will not provide gifts or hospitality of any dollar value, or any other gratuities to FCPS employee to maintain a contract.
6. Vendor hereby declares that in the process of preparing a quote/bid/proposal for FCPS, there have been no acts of bribery, extortion, trading, laundering of corrupt practices, and/or nepotism have transpired between FCPS employee and the vendor.
7. Please note any other exceptions below.

Vendor Name & Email	**Vendor Address & Phone Number**
Conflict of Interest Disclosure	
Name of FCPS employee or immediate family member with whom there may be a potential conflict of interest. *If no conflict of interest, write "N/A" and initial.*	Disclose the relationship to the employee or the immediate family member, their interest in the vendor's company, and any additional information

I certify that the information provided is true and correct by my signature below:

_____ _____

Signature of Vendor Authorized Representative/Date

Printed Name of Vendor Authorized Representative

MD COMAR 21.07.02.10 Performance and Payment Bond

Mandatory provision for all construction contracts exceeding $100,000:

A. Performance Bond. The required performance bond shall be in the form specified as follows:

PERFORMANCE BOND

_____ _____

Principal Business Address of Principal

_____

Surety a corporation of the State of _____and authorized to do business in the State of Maryland.

Bond Number _____ Penal Sum of Bond _____

(expressed in figures)

_____ Date Bond Executed _____ _____, 20___

(expressed in words)

The Board of Education of Frederick County 191 South East Street, Frederick MD. 21701-5918

Obligee Business Address of Obligee

Contract Description: Bid Number _____ Contract Date _____, 20___ Project Name: _____

_____

KNOW ALL MEN BY THESE PRESENTS, That we, the Principal named above and Surety named above, are held and firmly bound unto the Obligee named above in the Penal Sum of this Performance Bond stated above, for the payment of which Penal Sum we bind ourselves, our heirs, executors, administrators, personal representatives, successors, and assigns, jointly and severally, firmly by these presents. However, where Surety is composed of corporations acting as co-sureties, we the co-sureties, bind ourselves, our successors and assigns, in such Penal Sum jointly and severally as well as severally only for the purpose of allowing a joint action or actions against any or all of us, and for all other purposes each co-surety binds itself, jointly and severally with the Principal, for the payment of such sum as appears above its name below, but if no limit of liability is indicated, the limit of such liability shall be the full amount of the Penal Sum.

WHEREAS, Principal has entered into or will enter into a contract with The Board of Education of Frederick County, which contract is described and dated as shown above, and incorporated herein by reference. The contract and all items incorporated into the contract, together with any and all changes, extensions of time, alterations, modifications, or additions to the contract or to the work to be performed thereunder or to the Plans, Specifications, and Special Provisions, or any of them, or to any other items incorporated into the contract shall hereinafter be referred as "the Contract."

WHEREAS, it is one of the conditions precedent to the final award of the Contract that these presents be executed.

NOW, THEREFORE, during the original term of said Contract, during any extensions thereto that may be granted by The Board of Education of Frederick County, and during the guarantee and warranty period, if any, required under the Contract, unless otherwise stated therein, this Performance Bond shall remain in full force and effect unless and until the following terms and conditions are met:

1 Principal shall well and truly perform the Contract; and
2 Principal and Surety shall comply with the terms and conditions in this Performance Bond.

Whenever Principal shall be declared by The Board of Education of Frederick County to be in default under the Contract, the Surety may, within 15 days after notice of default from The Board of Education of Frederick County, notify The Board of Education of Frederick County of its election to either promptly proceed to remedy the default or promptly proceed to complete the contract in accordance with and subject to its terms and conditions. In the event the Surety does not elect to exercise either of the above stated options, then The Board of Education of Frederick County thereupon shall have the remaining contract work completed, Surety to remain liable hereunder for all expenses of completion up to but not exceeding the penal sum stated above.

The Surety hereby stipulates and agrees that no change, extension of time, alteration or addition to the terms of the Contract or

MD COMAR 21.07.02.10 Performance and Payment Bond

PERFORMANCE BOND CONTINUED

to the work to be performed thereunder or the Specifications accompanying the same shall in any way affect its obligation on this Performance Bond, and it does hereby waive notice of any such change, extension of time, alteration or addition to the terms of the Contract or to the work or to the Specifications.

This Performance Bond shall be governed by and construed in accordance with the laws of the State of Maryland and any reference herein to Principal or Surety in the singular shall include all entities in the plural who or which are signatories under the Principal or Surety heading below.

IN WITNESS WHEREOF, Principal and Surety have set their hands and seals to this Performance Bond. If any individual is a signatory under the Principal heading below, then each such individual has signed below on his or her own behalf, has set forth below the name of the firm, if any, in whose name he or she is doing business, and has set forth below his or her title as a sole proprietor. If any partnership or joint venture is a signatory under the Principal heading below, then all members of each such partnership or joint venture, and each member has set forth below his or her title as a general partner, limited partner, or member of joint venture, whichever is applicable. If any corporation is a signatory under the Principal or Surety heading below, then each such corporation has caused the following: the corporation's name to be set forth below, a duly authorized representative of the corporation to affix below the corporation's seal and to attach hereto a notarized corporate resolution of power of attorney authorizing such action, and each such duly authorized representative to sign below and set forth below his or her title as a representative of the corporation. If any individual acts as a witness to any signature below, then each such individual has signed below and has set forth below his or her title as a witness. All of the above has been done as of the Date of Bond shown above.

In Presence of:
Witness

_____ as to

Individual Principal

_____ (SEAL)

In Presence of:
Witness

_____

_____ as to

_____ as to

_____ as to

Co-Partnership Principal

_____ (SEAL)
(Name of Co-Partnership)

By: _____(SEAL)

_____(SEAL)

_____(SEAL)

_____
(Name of Corporation)

_____
Attest:

_____
Corporate Principal

_____ as to
(Corporate Secretary)

By: _____
(President)

AFFIX CORPORATE SEAL

MD COMAR 21.07.02.10 Performance and Payment Bond

PERFORMANCE BOND CONTINUED

_____
(Individual or Corporate Surety)

Attest: (SEAL) By: _____ (SEAL)

_____ Title _____
(Signature)

_____ _____
(Bonding Agent's Name) (Name of Surety)

_____ _____
(Agent's Address) (Business Address of Surety)

Approved as to legal form and sufficiency this _____ day of _____, 20__ _____
(Asst. Attorney General)

B. Payments Bond. The required Payments bond shall be in the form specified as follows:

PAYMENT BOND

_____ _____
(Principal) (Business Address of Principal)

Surety_____ a corporation of the State of _____ and authorized to do business in the State of Maryland
OR
an individual surety qualified in accordance with State Finance and Procurement Article, § 13-207 or 17-104, Annotated Code of Maryland.

Bond Number _____ Penal Sum of Bond _____
(expressed in figures)

_____ Date Bond Executed _____, 20____
(expressed in words)

The Board of Education of Frederick County 191 South East Street, Frederick MD 21701
(Obligee) (Business Address of Obligee)

Contract Description: Bid Number #_____ Contract Date _____, 20___ Project Name: _____

BY THESE PRESENTS, That we, the Principal named above and Surety named above, being authorized to do business in Maryland, and having business address as shown above, are held and firmly bound unto the Obligee named above, for the use and benefit of claimants as hereinafter defined, in the Penal Sum of this Payment Bond stated above, for the payment of which Penal Sum we bind ourselves, our heirs, executors, administrators, personal representatives, successors, and assigns, jointly and severally, firmly by these co-sureties, bind ourselves, our successors and assigns, in such Penal Sum jointly and severally as well as severally only for the purpose of allowing a joint action or actions against any or all of us, and for all other purposes each co-surety binds itself, jointly and severally with the Principal, for the payment of such sum as appears above its name below, but if no limit of liability is indicated, the limit of such liability shall be the full amount of the Penal Sum.

MD COMAR 21.07.02.10 Performance and Payment Bond

PAYMENT BOND CONTINUED

WHEREAS, Principal has entered into or will enter into a contract with The Board of Education of Frederick County, which contract is described and dated as shown above, and incorporated herein by reference. The contract and all items incorporated into the contract, together with any and all changes, extensions of time, alterations, modifications, or additions to the contract or to the work to be performed thereunder or to the Plans, Specifications, and Special Provisions, or any of them, or to any other items incorporated into the contract shall hereinafter be referred to as the "Contract".

WHEREAS, it is one of the conditions precedent to the final award of the Contract that these presents be executed.

NOW THEREFORE, the condition of this obligation is such that if the Principal shall promptly make payment to all claimants as hereinafter defined, for all labor and materials furnished, supplied and reasonably required for use in the performance of the Contract, then this obligation shall be null and void; otherwise it shall remain in full force and effect, subject to the following conditions:

1. A claimant is defined to be any and all of those persons supplying labor and materials (including lessors of the equipment to the extent of the fair market value thereof) to the Principal or its subcontractors and subcontractors in the prosecution of the work provided for in the Contract, entitled to the protection provided by Section 17-101et. seq., State Finance and Procurement Article of the Annotated Code of Maryland, as from time to time amended.

2. The above named Principal and Surety hereby jointly and severally agree with the Obligee that every claimant as herein defined, who has not been in full may, pursuant to and when in compliance with the provisions of the aforesaid Section 9-113, sue on this Bond for the use of such claimant, prosecute the suit to final judgment for such sum or sums as may be justly due claimant and have execution thereon. The Obligee shall not be liable for the payment of any costs or expenses of any such suit.

The Surety hereby stipulates and agrees that no change, extension of time, alteration or addition to the terms of the Contract or to the work to be performed thereunder or the Specifications accompanying the same shall in any way affect its obligation on this Payment Bond, and it does hereby waive notice of any such change, extension of time, alteration or addition to the terms of the Contract or to the work or to the Specifications.

This Payment Bond shall be governed by and construed in accordance with the laws of the State of Maryland and any reference herein to Principal or Surety in the singular shall include all entities in the plural who or which are signatories under the Principal or Surety heading below.

IN WITNESS WHEREOF, Principal and Surety have set their hands and seals to this Payment Bond. If any individual is a signatory under the Principal heading below, then each such individual has signed below on his or her own behalf, has set forth below the name of the firm, if any, in whose name he or she is doing business, and has set forth below his or her title as a sole proprietor. If any partnership or joint venture is a signatory under the Principal heading below, then all members of each such partnership or joint venture have signed below, each member has set forth below the name of the partnership or joint venture, and each member has set forth below his or her title as a general partner, limited partner, or member of joint venture, whichever is applicable. If any corporation is a signatory under the Principal or Surety heading below, then each such corporation has caused the following: the corporation's name to be set forth below, a duly authorized representative of the corporation to affix below the corporation's seal and to attach hereto a notarized corporate resolution of power of attorney authorizing such action, and each such duly authorized representative to sign below and set forth below his or her title as a representative of the corporation. If any individual acts as a witness to any signature below, then each such individual has signed below and has set forth below his or her title as a witness. All of the above has been done as of the date shown above and in the presence of:

MD COMAR 21.07.02.10 Performance and Payment Bond

PAYMENT BOND CONTINUED

Witness _____ (Individual Principal) _____

_____ as to _____ (SEAL)

Witness _____ (Name of Co-Partnership) _____

_____ (SEAL)
(Co-Partnership Principal)

_____ as to By: _____ (SEAL)

_____ as to _____ (SEAL)

_____ as to _____ (SEAL)

_____
(Corporate Principal)

Attest: _____ (Name of Corporation) _____

_____ as to By: _____ AFFIX CORPORATE SEAL
(Corporate Secretary) (President)

_____
(Individual or Corporate Surety)

Attest: (SEAL) By: _____ (SEAL)

_____ Title _____
Signature

Bonding Agent's Name _____ (Business Address of Surety) _____

Agent's Address _____ (Business Address of Surety) _____

Approved as to legal form and sufficiency this _____ day of _____, 20__ _____
(Asst. Attorney General)

FREDERICK COUNTY PUBLIC SCHOOLS	Reg. No. 200-08
Subject: MINORITY BUSINESS ENTERPRISE PROCEDURES	**Issued:** 6/7/85
Preparing Office: Office of the Superintendent	**Amended:** 12/22/17

I. Policy 202.5

II. Procedures
MBE PROCEDURES FOR STATE-FUNDED PUBLIC SCHOOL CONSTRUCTION PROJECTS

BACKGROUND

In 1978, the Maryland General Assembly passed legislation, which was signed into law to establish the State's Minority Business Enterprise Program. This new law set as a goal that at least 10 percent of each unit of State government's total dollar value of procurement contracts for purchases and/or contracts is awarded to minority business enterprises. This law was subsequently modified and the goal was increased to 14 percent. More recently, in 2001, the goal was increased to 25 percent with subcontracting sub-goals of 7 percent for certified African American-owned businesses and 10 percent for certified women-owned businesses.

In 1979, the Rules, Regulations, and Procedures for the Administration of the School Construction Program were revised by the Board of Public Works to require each local board of education to adopt procedures to attempt to include minority business enterprises in State funded school construction projects. The State law was revised and now states: "The Interagency Committee on School Construction (IAC) shall require each local board of education to adopt procedures consistent with this chapter before obtaining funds for public school construction projects".

In May 2007, the Rules, Regulations, and Procedures were replaced by formal state regulations. The regulations concerning project procurement (COMAR 23.03.03) indicate that the State's minority business enterprise goals and procedures apply to all State funded projects, irrespective of procurement method.

In July 2011, a Sub-Goal Directive was issued by the Governor's Office of Minority Affairs (GOMA). This Directive established the process for setting contract by contract sub-goals. Sub-goals consistent with demonstrated underrepresentation were pre-established within the Directive.

OVERVIEW

This Minority Business Enterprise (MBE) procedure document was originally developed in response to a requirement set forth in the Rules, Regulations, and Procedures for the Administration of the School Construction Program. The MBE requirement was initially established under House Bill (HB) 64, which was passed in the 1978 session of the Maryland General Assembly and signed into law as Chapter 575 of the Acts of 1978.

Since the Board adopted its original Minority Business Enterprise Procedures, there have been changes in State statutes, regulations adopted by the Board of Public Works, procedural requirements, project eligibility requirements and the sub-goals to be set for school construction projects. This revised procedure is consistent with current legislation and the changes to the Code of Maryland Regulations (COMAR) requirements.

The revised procedures issued by GOMA in July 2011 provide guidance for establishing overall goals that are contract-specific and reasonable, and for setting sub-goals only on contracts that actually have subcontracting opportunities. The procedures for setting overall MBE goals have not changed, however once the overall goal is decided by the Procurement Review Group (PRG), the sub-goal analysis must be completed for contracts that have a total potential MBE participation over a minimum threshold amount, as defined for specific Major Industry Categories.

All activities funded through the Public School Construction Program (PSCP) fall within Construction in the Major Industry Categories. In place of the original goals of 7 percent for African American-owned businesses and 10 percent for certified women-owned businesses, the sub-goals for construction are now 7 percent for African American-owned businesses and 4 percent for Asian American-owned businesses. Sub-goals are not to be set for other minority groups which may be represented in the overall contract goal.

1.0 PURPOSE

The purpose of these procedures is to fulfill the intent of the law and the guidelines issued by GOMA by setting appropriate goals for minority business enterprise participation in every contract that includes State funding through the PSCP. Local Educational Agencies (LEAs) shall attempt to achieve the result that a minimum of 25 percent of the total dollar value of all construction contracts is made directly or indirectly with certified minority business enterprises when State PSCP funds are utilized, with a minimum of 7 percent from certified African American-owned businesses, a minimum of 4 percent from certified Asian American-owned businesses, and the balance from any certified minority business enterprises. All general contractors, including certified MBE firms, when bidding as general or prime contractors are required to attempt to achieve the MBE subcontracting goals from certified MBE firms.

2.0 EFFECTIVE DATE

These procedures have been adopted for use in Frederick County and supersede previously utilized MBE procedures, in accordance with Title 14, §3, State Finance and Procurement Article.

Note: All current attachments required for MBE participation can be found on the Public School Construction website: http://www.pscp.state.md.us/programs/mbe/mbeindex.cfm

3.0 DEFINITIONS

1. **Certification** means the determination that a legal entity is a minority business enterprise consistent with the intent of Subtitle 3 of the State Finance and Procurement Article.

2. **Certified Minority Business Enterprise** means a minority business that holds a certification issued by the Maryland State Department of Transportation (MDOT).

3. **Corporation**, as defined by MDOT, is an artificial person or legal entity created by or under the authority of the laws of any state of the United States, the District of Columbia or a territory or commonwealth of the United States and formed for the purpose of transacting business in the widest sense of that term, including not only trade and commerce, but also manufacturing, mining, banking, insurance, transportation and other forms of commercial or industry activity where the purpose of the organization is profit. For eligibility for certification, disadvantaged and/or minority individuals must own at least 51 percent of the voting stock and at least 51 percent of the aggregate of all classes of stock that have been issued by the corporation. (Note: stock held in trust is not considered as stock held by the disadvantaged businesspersons when computing the business person(s) ownership.)

4. **Managerial Control**, as defined by MDOT, means that a disadvantaged or minority owner(s) has the demonstrable ability to make independent and unilateral business decisions needed to guide the future and destiny of a business. Control may be demonstrated in many ways. For a minority owner to demonstrate control, the following examples are put forth, but are not intended to be all inclusive:

    a. Articles of Incorporation, Corporate Bylaws, Partnership Agreements and other agreements shall be free of restrictive language which would dilute the minority owner's control thereby preventing the minority owner from making those decisions which affect the destiny of a business;

    b. The minority owner shall be able to show clearly through production of documents the areas of the disadvantaged business owner's control, such as, but not limited to:

        1) Authority to sign payroll checks and letters of credit;
        2) Authority to negotiate and sign for insurance and/or bonds;
        3) Authority to negotiate for banking services, such as establishing lines of credit; and

4) Authority to negotiate and sign for contracts.

c. Agreements for support services that do not lessen the minority owner's control of the company are permitted as long as the disadvantaged or minority business owner's authority to manage the company is not restricted or impaired.

5. **Minority Business Enterprise** (MBE) means any legal entity, except a joint venture, that is (a) organized to engage in commercial transactions, and (b) at least 51 percent owned and controlled by one or more individuals who are socially and economically disadvantaged including: African Americans; American Indian/Native Americans; Asians; Hispanics; Physically or mentally disabled individuals; or, Women.

6. **Minority Business Enterprise Liaison** means the employee of the LEA designated to administer the Minority Business Enterprise Procedures for State funded public school construction projects.

7. **Operational Control, as defined by MDOT**, means that the disadvantaged or minority owner(s) must possess knowledge necessary to evaluate technical aspects of the business entity. The primary consideration in determining operational control and the extent to which the disadvantaged or minority owner(s) actually operates a business will rest upon the specialties of the industry of which the business is a part. The minority owner should have a working knowledge of the technical requirements needed to operate in his/her industry. Specifically, in the construction industry and especially among small (one to five person firms) contractors, it is reasonable to expect the disadvantaged or minority owner(s) to be knowledgeable of all aspects of the business. Accordingly, in order to clarify the level of operational involvement which a minority owner must have in a business for it to be considered eligible, the following examples are put forth, but are not intended to be all inclusive:

   a. The minority owner should have experience in the industry for which certification is being sought; and

   b. The minority owner should demonstrate that basic decisions pertaining to the daily operations of the business are independently made. This does not necessarily preclude the disadvantaged or minority owner(s) from seeking paid or unpaid advice and assistance. It does mean that the minority owner currently must possess the knowledge to weigh all advice given and to make an independent determination.

8. **Ownership**, as defined by MDOT, means that:

   a. The minority owner(s) of the firm shall not be subject to any formal or informal restrictions, which limit the customary discretion of the owner(s). There shall be no restrictions through, for example, charter requirements, by-law provisions, partnership agreements, franchise or distributor agreements or any other agreements that prevent the minority owner(s), without the cooperation or vote of any non-minority, from making a business decision of the firm.

   b. This means that the disadvantaged or minority persons, in order to acquire their ownership interests in the firm, have made real and substantial contributions of capital, expertise or other tangible personal assets derived from independently owned holdings without benefit of a transfer of assets, gift or inheritance from non-minority persons. Examples of insufficient contributions include a promise to contribute capital, a note payable to the firm or its owners who are not minority persons or the mere participation as an employee rather than as a manager. If the ownership interest held by a disadvantaged or minority person is subject to formal or informal restrictions, such as options, security interests, agreements, etc., held by a non-minority person or business entity, the options, security interests, agreements, etc., held by the non-minority person or business entity must not significantly impair the disadvantaged or minority person's ownership interest.

9. **Partnership** means an unincorporated association of two or more persons to carry on as co-owners of a business for profit. For a partnership to be deemed eligible for certification under the MDOT Program, the disadvantaged or minority person's interest must be at least 51 percent of the partnership capital.

10. **Disadvantaged Business Enterprise (DBE)** means a citizen or lawfully admitted permanent resident of the United States who is socially disadvantaged and economically disadvantaged. The law establishes the level of personal net worth at $1,500,000, adjusted annually for inflation according to the Consumer Price Index (CPI); above this net personal worth figure, an individual may not be found to be socially and economically disadvantaged. The current personal net worth (PNW) figure can be found on the MDOT website at: http://www.mdot.maryland.gov/Office%20of%20Minority%20Business%20Enterprise/Resources%20Information.

11. **Sole Proprietorship**, as defined by MDOT, is a for-profit business owned and operated by a disadvantaged or minority person in his or her individual capacity. For a sole proprietorship to be deemed eligible for certification under the DBE/MBE Program, the disadvantaged or minority person must be the sole proprietor.

12. **Days** mean business days unless otherwise specified. Business days are defined as Monday through and including Friday, with the exception of Nationally or State recognized holidays.

13. **Regular Dealer** is defined to be a firm that owns, operates, or maintains a store, warehouse, or any other establishment in which materials, supplies, articles, or equipment are of the general character described by the specifications required under the contract and are bought, kept in stock, or regularly sold or leased to the public in the usual course of business. A "regular dealer" does not include a packager, broker, manufacturer's representative, or any other person that arranges or expedites transactions.

4.0 MBE GOAL SETTING PROCEDURES

1. General

   a. The overall MBE goal and the sub-goals, if appropriate, are established on a per-contract basis for the purposes of solicitation.

      1) Where a project consists of more than one contract, the individual contract goals and sub-goals, if appropriate, should reflect the overall project goal and sub-goals.

      2) The words "if appropriate" and "if applicable" throughout this document reflect the understanding that for some solicitations, no African American or Asian American sub-goals should be established.

   b. The MBE program requires that all race-neutral measures be considered before making use of race-based measures. Using a combination of race-neutral and race-based measures for each specific school construction project will help ensure that certified MBE firms are afforded the opportunity to submit bids and be utilized to the greatest extent possible.

      1) *Race-neutral measures* include any action taken by the LEA to make it easier for all contractors, including MBEs, to compete successfully for public school construction project contracts. These might include widespread advertising of bidding opportunities, job fairs, and similar publicity events.

      2) *Race-based measures* include setting an overall MBE goal and MBE sub-goals, if appropriate, based upon race, gender, ethnicity, etc., for a specific contract.

2. General Considerations for Setting MBE Goal and Sub-goal. The overall MBE goal and the sub-goals, if appropriate, should be set for each specific project contract, considering but not limited to, the following factors:

   a. The extent to which the work to be performed can reasonably be segmented to allow for MBEs to participate in the project contract;

   b. A determination of the number of certified MBEs that potentially could perform the identified work;

c. The geographic location of the project in relationship to the identified certified MBEs;

d. Information obtained from other state and local departments/agencies related to establishing a MBE goal and/or sub-goals for similar construction projects or work in the jurisdiction;

e. A State agency may apply only 60% of the cost of materials and supplies provided by a regular dealer that is a certified MBE toward achieving an MBE contract goal. For materials or supplies purchased from a certified MBE that is neither a manufacturer nor a regular dealer, only the fees, commissions, or transportation charges related to the purchase can be counted toward achieving the MBE contract goal, if the agency determines that they are reasonable and not excessive; the actual cost of materials and supplies cannot be counted toward the MBE contract goals.

f. Information obtained from other state and local departments/agencies related to MBE participation in similar construction projects or work in the jurisdiction; and

g. Any other activities or information that may be identified as useful and productive.

h. Procurement agencies may not use quotas.

i. Procurement agencies may not use any project goal-setting process that:

1) Solely relies on the State's overall percentage goal, or any other jurisdiction's overall percentage goal; or

2) Fails to incorporate an analysis of:

- The potential subcontract opportunities available in the prime procurement contract;
- The availability of certified MBEs to respond competitively to the potential subcontract opportunities;
- Guidelines established by GOMA; and
- Other factors that contribute to constitutional goal setting.

3. MBE Sub-goal Setting Procedure:

a. Once an overall MBE participation goal is set for a project contract, each unit shall determine the appropriate contract sub-goals.

b. If the expected value of the procurement is not equal to or in excess of $200,000, the Sub-goal process is discretionary.

c. All State funded public school construction is classified as Construction in the Major Industry Category schedule established by regulation.

1) Accordingly, sub-goals for school construction projects receiving State funding participation apply to the following Subgroups:

- African American: 7%
- Asian American: 4%

2) Dually certified firms are to be counted as being owned by a member of the relevant ethnic Subgroup, not as a woman-owned business.

d. Sub-goals shall only be set when the overall goal is greater than or equal to the sum of the sub-goals listed in subsection 3.c.1 of this section, plus two percent (2%), i.e., the overall goal must be at least 13%; otherwise, no sub-goals may be established for the contract.

e. A sub-goal may not be set if the number of certified firms in the Subgroup is less than three (3).

f. If the Subgroup has three (3) or more certified firms available to perform the work, the Recommended Sub-goal should be set at the number specified above, unless a basis is provided in the Procurement Review Group documentation for not applying the specified sub-goal.

g. For each procurement that has an overall goal, the MBE Program Sub-goal Worksheet (Appendix I) shall be completed and signed by the LEA Procurement Officer and MBE Liaison.

4. The Superintendent or designee shall establish one or more procurement review groups (PRG). The PRG must include at a minimum the MBE liaison and the Procurement Officer (PO) or a representative from the procurement office. The PRG could also include a capital improvement project manager, the project architect, the cost estimator, the Construction Manager, and/or other individuals selected by the Superintendent or designee.

   a. The PRG should communicate and/or meet as needed to consider the subcontracting goal and sub-goals, if applicable, for individual projects or groups of projects.

   b. The PRG should consider the factors cited in 4.0, subsection 2, when establishing the MBE goal and sub-goals, if applicable, for each project or segmented piece of a project that are reasonable and attainable.

   c. The PRG must complete and submit a written analysis for each state funded school construction project with an estimated cost that is expected to exceed $200,000.

      1) For state-funded projects that required review of construction documents, the written analysis and the MBE Program Worksheet (Appendix I) shall be submitted with the construction documents to the Department of General Services (DGS), and will be reviewed by the DGS for submission, appropriate signatures and correspondence between the goal and sub-goals, if applicable, indicated in the analysis and those of the procurement documents.

      2) For state-funded projects that do not require review of construction documents, the written analysis and the MBE Program Worksheet shall be submitted to the PSCP, and will be reviewed for submission and appropriate signatures.

      3) For locally funded projects that are anticipating to be requested for state approval of planning and funding, the written analysis and the MBE Program Worksheet shall be submitted with construction documents to the Maryland State Department of Education (MSDE), and will be reviewed for submission, appropriate signatures, and correspondence between the goal and sub-goals, if applicable, indicated in the analysis and those of the procurement documents. Submission of the documents is a pre-condition for recommendation for state approval of planning and funding when submitted in an annual CIP.

      4) If the project cost is estimated to exceed $200,000 then a copy of the written analysis shall also be sent to GOMA at the same time that the written analysis is submitted to the DGS or the PSCP

   d. For projects estimated to cost between $50,000 and $200,000 the same analysis form is to be completed and submitted. This could be a responsibility of the PRG, but could be performed by others as well.

      1) For state-funded projects that require review of construction documents, the written analysis and the MBE Program Worksheet shall be submitted with the construction documents to the DGS, and will be reviewed for submission, appropriate signatures, and correspondence between the goal and sub-goals, if applicable, indicated in the analysis and those of the procurement documents.

      2) For state-funded projects that do not require review of construction documents, the written analysis and the MBE Program Worksheet shall be submitted to the PSCP and will be reviewed for submission and appropriate signatures.

   e. The PRG should consult with local counsel for the Board of Education as needed.

5. It is recognized that by utilizing the factors cited in Section 4.0, subsection 2, the MBE goal and/or sub-goals, if applicable, for a specific project or portion thereof may be significantly higher than the overall goals of the program (25% overall, with 7% from African American-owned businesses and 4% from Asian American-owned businesses). It is also recognized and possible that there will be MBE goals set that are lower than those stated above or even that no MBE goal and/or sub-goals will be set for a specific project or the segmented piece of the project.

6. Assistance in reviewing the factors cited above and setting a goal and/or sub-goals, if applicable, for specific projects or a segmented piece of a project can be obtained by contacting the PSCP and/or GOMA.

5.0 IMPLEMENTING PROCEDURES - $50,000 OR LESS

For construction projects estimated to cost $50,000 or less, the following procedures will be utilized:

1. A MBE goal and/or MBE sub-goals are not required to be set for contracts that are anticipated to be for $50,000 or less.

2. All advertisements, solicitations, and solicitation documents shall include the following statement:

   a. "Certified Minority Business Enterprises are encouraged to respond to this solicitation."

3. To encourage greater MBE participation, the staff of the LEA should send out notices of potential projects and a specific project to MBEs to solicit bids or proposals directly from minority business enterprise contractors that are certified.

4. A copy of the solicitation notice, preferably electronically, shall be sent to GOMA at the same time the advertisement for the solicitation is released.

5. When a pre-bid or pre-proposal conference or meeting is held, the MBE liaison or designated representative shall explain that all bidders or offerors are encouraged to utilize certified MBEs for this project or segments of the project.

6. FCPS provides current solicitation packages on the FCPS website: http://www.fcps.org/bidlist. Large solicitation packages that contain drawings are available thru a third party electronic plan room.

7. Minority Business Enterprise forms identified in Section 6.0 of this procedure for projects over $50,000, are not required to be submitted for these projects ($50,000 or less).

8. The names of prime contractors obtaining drawings and specifications will be shared with certified MBEs and MBE associations, upon request.

9. At the time of the contract award, the MBE Liaison or a designated person will record any anticipated certified minority business enterprise participation data made available from the successful contractor.

10. A business that presents itself as a minority business may participate in a project but may not be counted toward MBE participation until it is a certified minority business enterprise. If the MBE is not certified at the time of contract award, it may not be counted at that time. Only the funds paid after MDOT certification can be counted as MBE participation in the project. If a certified MBE fails to meet the standards specified in State Finance and Procurement Article14-301 (F) and (J), Annotated Code of Maryland, the payments made to the MBE can be recorded and counted under a contract entered into when the MBE was eligible and certified. Ineligibility of an MBE to participate in the MBE program may not be the sole cause of the termination of the MBE contractual relationship for the remainder of the term of the contract.

11. The contractor will complete the Standard Monthly Contractor's Requisition for Payment (IAC/PSCP Form 306.4), specifically page 3 of 16, Minority Business Enterprise Participation, with each requisition submitted for payment. If certified MBE firms are known at the time of contract award, their names and other appropriate information should be entered on page 3 of the first and all subsequent requisitions for payment. Any MBEs identified during the life of the project should be added as soon as the contractor engages them after approval by the LEA.

12. Upon completion of the project, the contractor will provide a summary of the total of all funds paid to certified MBE firms. This should be within the contractor's final requisition for payment. The summary shall be forwarded to the PSCP with the close-out paperwork.

6.0 IMPLEMENTING PROCEDURES - Over $50,000

For construction projects estimated to cost in excess of $50,000, the following procedures will be utilized:

1. All advertisements, solicitations, and solicitation documents shall include the following statements:

   a. "Certified Minority Business Enterprises are encouraged to respond to this solicitation notice."

   b. "The contractor or supplier who provides materials, supplies, equipment and/or services for this construction project shall attempt to achieve the specific overall MBE goal of __ percent established for this project. All prime contractors, including certified MBE firms, when submitting bids or proposals as general or prime contractors, are required to attempt to achieve this goal from certified MBE firms."

   c. If sub-goals have been established for this project then one of the following should be included:

      1) "The sub-goals established for this project are __ percent from African American-owned businesses and __ percent from Asian American-owned businesses."

      2) "The sub-goal established for this project is __ percent from African American-owned businesses."

      3) "The sub-goal established for this project is __ percent from Asian American-owned businesses."

   d. "The bidder or offeror is required to submit with its bid or proposal a completed form "Certified Minority Business Enterprise Utilization and Fair Solicitation Affidavit" as described in the solicitation documents.

   e. If there are no overall MBE goal or MBE sub-goals established for the project, then only 1.A. above is to be included.

2. Other Advertisement and Outreach Requirements:

   a. To encourage greater MBE participation the staff of the LEA should send out notices of potential projects to MBEs or solicit bids or proposals directly from minority business enterprise contractors that are certified.

   b. A copy of the solicitation notice, preferably electronically, shall be sent to GOMA at the same time the advertisement for the solicitation is released.

   c. FCPS provides solicitation packages on the FCPS website: http://www.fcps.org/bidlist. Large solicitation packages that contain drawings are available thru a third party plan room.

   d. When a pre-bid or pre-proposal conference is held, the MBE Liaison or designated representative shall explain the MBE goal and sub-goals, if applicable; the MBE provisions of the solicitation; the documentation required at the time of submission; its relationship to the responsiveness of the bidder or offeror; how to complete the required schedules, and additional information and supporting documentation that may be required after the bid or proposal opening. All contractors who attend the pre-bid or pre-proposal conference should receive a list or information explaining how to obtain a listing of certified MBE firms who could perform the work or have expressed an interest in performing the school construction work required for the specific project in the jurisdiction.

   e. The names of prime contractors obtaining drawings and specifications will be shared with certified MBEs and MBE associations, upon request.

f. The MBE liaison, in conjunction with the procurement officer or project staff, should respond to all applicable questions and concerns relating to the project's MBE requirements, completely and in a timely fashion, to ensure that all potential contractors and subcontractors can compete effectively.

3. All Solicitation Documents Shall Include the Following:

a. "Certified Minority Business Enterprises are encouraged to respond to this solicitation notice". "All contractors, including certified MBE firms, when submitting bids or proposals as prime contractors are required to attempt to achieve the MBE goal and sub-goals, if applicable, established for the project from certified MBEs".

b. "The contractor or supplier who provides materials, supplies, equipment and/or services for this construction project shall attempt to achieve the result that a minimum of __ percent of the total contract value is with certified Minority Business Enterprises, with a minimum of __ percent from certified African American-owned businesses, a minimum of __ percent from certified Asian American-owned businesses, and the balance from any certified Minority Business Enterprises. All contractors, including certified MBE firms, when submitting bids or proposals as prime contractors, are required to attempt to achieve the MBE goal and sub-goals, if applicable, from certified MBEs". Note: see 6.1.C. above for variations that may be required.

c. Each bid or offer submitted, including a submittal from a certified minority business enterprise in response to this solicitation, shall be accompanied by a completed "Certified Minority Business Enterprise Utilization and Fair Solicitation Affidavit" and a completed "MBE Participation Schedule". These two forms must be accurate and consistent with each other.

1) The forms shall be submitted with the sealed bid price or proposal at a place, date, and time specified in the solicitation document.

2) As an alternative, and at the discretion of the school system, the "Certified Minority Business Enterprise Utilization and Fair Solicitation Affidavit" could be submitted with the sealed bid price or proposal at a place, date, and time specified in the solicitation document. The sealed bids or proposals received by the time specified could be held, unopened for a maximum of 30 minutes. Within that time (30 minutes) each bidder or offeror must submit the "MBE Participation Schedule" in a separate sealed envelope. The sealed price envelopes from each bidder or offeror who submits both the sealed bid or proposal and the envelope with "MBE Participation Schedule" will then be opened and reviewed and recorded as a viable submission. Any contractor that fails to submit the second envelope, with the "MBE Participation Schedule", prior to the specified time allowed (30 minutes) after the submittal of the sealed bid or proposal will be deemed non-responsive and the sealed bid or proposal will not be opened or considered.

d. The submittal of a completed and signed "Certified Minority Business Enterprise Utilization and Fair Solicitation Affidavit" and a completed and signed "MBE Participation Schedule" indicates the bidder's or offeror's recognition and commitment to attempt to achieve the MBE goal and/or MBE sub-goals, if applicable, for the specific project.

1) The bidder or offeror recognizes that their efforts made to initiate contact, to solicit, and to include MBE firms in this project will be reviewed carefully and evaluated based upon the actions taken by them prior to and up to 10 business days before the bid or proposal opening. Follow-up actions taken by the bidder or offeror within the 10 business days prior to the bid opening will also be considered.

2) Based upon this review and evaluation it will be determined, by the MBE liaison, procurement officer, or a designated person, if a good faith effort was made by the apparent low bidder or apparent successful offeror.

e. The bidder or offeror must check one of the three boxes on the "Certified Minority Business Enterprise Utilization and Fair Solicitation Affidavit" which relates to the level of MBE participation achieved for the project. The bidder's or offeror's signature indicates that in the event that they did not meet the MBE goal or sub-goals, if applicable, that:

   1) They are therefore requesting a waiver, and

   2) Documentation of their good faith efforts will be provided to the school system staff within 10 business days of being notified that they are the apparent low bidder or apparent successful offeror.

f. The bidder or offeror must submit the "MBE Participation Schedule" (as and when described above), which lists and provides information related to each certified MBE firm that the bidder or offeror will utilize on this project. A completed and accurate "Certified Minority Business Enterprise Utilization and Fair Solicitation Affidavit" is required. All of the work specified to be performed by each MBE firm, MDOT certification number, minority type, and percentages must be correct.

g. The "MBE Participation Schedule" should be completed and submitted with all calculations utilizing the base bid or offer only. A revised "MBE Participation Schedule" should be submitted by the successful bidder or offeror once a determination is made as to the acceptance and/or rejection of any alternates.

h. If a request for a waiver has been made, the appropriate box on the "Certified Minority Business Enterprise Utilization and Fair Solicitation Affidavit" has been checked and the form signed, then the LEA should obtain and review the apparent low bidder's or successful offeror's supporting documentation of the good faith efforts to justify the granting of the waiver, prior to submitting the contract award for approval to the board of education.

i. The following documentation shall be considered as part of the contract, and shall be furnished by the apparent low bidder or successful offeror to the MBE Liaison or designated person, within ten (10) business days from notification that the firm is the apparent low bidder or successful offeror:

   1) A completed and signed "Outreach Efforts Compliance Statement" and "Minority Business Enterprise Subcontractor Project Participation Statement". One "Minority Business Enterprise Subcontractor Project Participation Statement" shall be completed and signed by the prime contractor and each MBE firm listed on the "Certified Minority Business Enterprise Utilization and Fair Solicitation Affidavit".

   2) Notification for purposes of this procedure means the earliest of the following methods of communication: orally in person, orally by telephone, orally by a telephone message, a faxed communication, a letter by date received or an electronic communication.

   3) The ten (10) business days do not include the day the notification is received, weekends or holidays (State or Federal), but the material submitted must be received by the close of business on the tenth day.

   4) The requirement to submit the above-listed documentation within the time frame specified will be considered by the IAC in its review of the request for contract award for the project. Failure to submit the required documentation within the time frame specified may result in a delay of the approval of the award of the contract, or the materials being returned without the approval of the award of the contract.

4. Waiver Procedures:

   a. If the apparent low bidder or successful offeror has determined that they are unable to meet the overall MBE goal or sub-goals, if applicable, for the project at the time of submission of a bid or offer, they must check either of the three boxes on the "Certified Minority Business Enterprise Utilization and Fair Solicitation Affidavit". The signature recognizes and acknowledges that a request for a waiver is being made. The apparent low bidder or successful offeror will therefore be required

to submit information and substantiating documentation that will be reviewed to justify the granting of a waiver.

b. If the apparent low bidder or successful offeror is unable to achieve the overall MBE contract goal and/or the MBE sub-goals, if applicable, from certified African American-owned businesses and/or from certified Asian American-owned businesses, the apparent low bidder or successful offeror shall submit, within 10 working days from notification that the firm is the apparent low bidder or successful offeror, a completed "Outreach Efforts Compliance Statement", "Minority Subcontractors Unavailability Certificate" and "MBE Waiver Documentation" which shall include the following:

   1) A detailed statement of the efforts made by the bidder or offeror to identify and select portions of the work proposed to be performed by subcontractors in order to increase the likelihood of achieving the stated goal;

   2) A detailed statement of the efforts made by the bidder or offeror prior to and at least ten (10) days before the bid or proposal opening to solicit minority business enterprises through written notices that describe the categories of work for which subcontracting is being solicited, the type of work to be performed and specific instructions on how to submit a bid or proposal;

   3) Follow-up actions taken by the bidder or offeror within the 10 days prior to the bid or proposal opening will also be considered;

   4) A detailed statement of the contractor's efforts to make personal contact with MBE firms identified for item (2) above;

   5) A record of the name, address, telephone number and dates contacted for each MBE identified under items (2) and (3) above;

   6) A description of the information provided to MBEs regarding the drawings, specifications and the anticipated time schedule for portions of the work to be performed;

   7) Information on activities to assist minority business enterprises to fulfill bonding requirements or to obtain a waiver of these requirements;

   8) Information on activities to publicize contracting opportunities to minority business enterprises, attendance at pre-bid meetings or other meetings scheduled by the MBE Liaison or designated representative; and

   9) As to each MBE that placed a subcontract quotation or offer which the apparent low bidder or successful offeror considers not to be acceptable, a detailed statement of reasons for this conclusion.

c. In addition, to any waiver documentation, the apparent low bidder or successful offeror shall submit one completed "Minority Business Enterprises Subcontractor Project Participation Statement" for each MBE firm that will participate in the project consistent with the information previously provided at the time of the submission of the "MBE Participation Schedule" or the revised "MBE Participation Schedule".

d. A waiver of an MBE contract goal or sub-goal, if applicable, may be granted by the LEA only upon receipt of "Outreach Efforts Compliance Statement", "Minority Subcontractor Unavailability Certificate" and "MBE Waiver Documentation" as described above in 4. b. items 1 through 9.

   1) The MBE Liaison will review and accept or reject the minority business enterprise material that is submitted, and could obtain legal advice or assistance from their attorney.

2) The MBE waiver request may not be considered unless all of the documentation specified above has been submitted in a timely fashion by the apparent low bidder or successful offeror.

3) Assistance in the review of a request for a waiver (the documentation and justifications) may be requested from the Public School Construction Program and/or the Governor's Office of Minority Affairs.

4) If a determination is made that the apparent low bidder or successful offeror did make a good faith effort, based upon a review of the documentation submitted, then the waiver must be granted. The award of contract shall then be made. The material and information submitted including the LEA's review and analysis notes and conclusion shall be retained in the project file.

5) If a determination is made that the apparent low bidder or successful offeror did not make a good faith effort, based upon a review of the documentation submitted, then the waiver should not be granted. The material and information submitted including the LEA's review and analysis notes and conclusion shall be retained in the project file. The award of contract shall then be made to the next lowest bidder or offeror, who meets the contractual requirements, including the MBE requirements.

6) When a waiver is granted, a copy of "MBE Waiver Documentation" accepted and signed by a LEA representative and with the reasons for the determination, shall be forwarded to the Governor's Office of Minority Affairs and the Public School Construction Program within 10 days after approval of the contract award by the Board of Education. Failure to submit the required documentation within the time frame specified may result in delayed approval of the award of contract by the IAC.

5. All Contracts Shall Include The Following:

a. *The contractor shall perform the contract in accordance with the representations made in the "Certified Minority Business Enterprise Utilization and Fair Solicitation Affidavit" and the "MBE Participation Schedule" submitted as part of the bid or proposal.*

b. *Failure to perform the contract as specified and presented in the bid or proposal submission without prior written consent of the owner shall constitute a violation of a material term of the contract.*

1) The contractor shall structure his/her operations for the performance of the contract to attempt to achieve the MBE goals as stated in the solicitation document.

2) The contractor agrees to use his/her best efforts to carry out these requirements consistent with the efficient and effective performance of the contract.

3) The contractor must ensure that all certified MBEs shall have the maximum practical opportunity to compete for additional subcontract work under the contract, even after the award of the contract.

4) The contractor shall submit monthly to the MBE Liaison or the s LEA's designated representative a report listing any unpaid invoices, over 30 days old, received from any certified MBE subcontractor, the amount of each invoice and the reason payment has not been made.

5) The contractor shall include in its agreements with its certified MBE subcontractors, a requirement that those subcontractors submit monthly to the MBE Liaison or appropriate representative a report that identifies the prime contract and lists all payments received from the contractor in the preceding 30 days, as well as any outstanding invoices, and the amount of those invoices.

6) The contractor shall cooperate in any reviews of the contractor's procedures and practices with respect to minority business enterprises, which the MBE Liaison, the PSCP, and/or GOMA may, from time to time, conduct.

7) The contractor shall maintain such records as are necessary to confirm compliance with its MBE participation obligations. These records must indicate the identity of certified minority and non-minority subcontractors employed on the contract, the type of work performed by each, and the actual dollar value of work performed. Subcontract agreements documenting the work performed by all MBE participants must be retained by the contractor and furnished to the MBE Liaison and or appropriate representative on request.

8) All records concerning MBE participation must be retained by the contractor for a period of five years after final completion of the contract, and will be available for inspection by the MBE Liaison, representatives from the PSCP and/or other designated official entities.

9) At the option of the MBE Liaison, or appropriate agency representative, upon completion of the contract and before final payment and/or release of retainage, the contractor shall submit a final report in affidavit form and under penalty of perjury, of all payments made to, or withheld from MBE subcontractors.

10) If at any time after submission of a bid or proposal and before execution of a contract, the apparent successful bidder or offeror determines that a certified MBE listed on its "MBE Participation Schedule" has become or will become unavailable, then the apparent successful bidder or offeror shall immediately notify the procurement officer and provide such officer with a reason(s) why the change has occurred. Any desired change in the "MBE Participation Schedule" shall be approved in advance by the procurement officer and shall indicate the contractor's efforts to substitute another certified MBE subcontractor to perform the work. Desired changes occurring after the date of contract execution may occur only upon written approval by the agency head and subsequently by contract amendment.

11) A business that presents itself as a minority business may participate in a project but the contract value may not be counted toward the MBE goal or sub-goals, if applicable, until the business is certified by MDOT. If it is not certified at the time of contract award it may not be counted toward the goal or sub-goals, if applicable, at that time. Only the funds paid after MDOT certification can be counted toward meeting the MBE goal or sub-goals, if applicable. If a certified MBE fails to meet the standards specified in State Finance and Procurement Article.14-301.1, Annotated Code of Maryland, the payments made to the MBE can be recorded and counted under a contract entered into when the MBE was eligible and certified. Ineligibility of an MBE to participate in the MBE program may not be the sole cause of the termination of the MBE contractual relationship for the remainder of the term of the contract.

12) Contractors are encouraged to seek additional MBE participation in their contracts during the life of the project. Any additional MBE participation from certified MBEs should be reported to the MBE liaison prior to initiation and should be included in subsequent monthly requisitions for payment.

13) The contractor shall complete the Certified Minority Business Participation Standard Monthly Contractor's Requisition for Payment (IAC/PSCP Form 306.4), specifically page 3 of 16, Minority Business Enterprise Participation, with each requisition submitted for payment this submittal should accurately reflect the payments to be made that month to MBEs and the cumulative total for the period specified. Any and all MBE firms that are identified on the "MBE Participation Schedule" should be included on page 3 of the first and all subsequent requisitions for payment. Any MBEs identified during the life of the project should be added as soon as the contractor engages them.

14) At the completion of the project the contractor shall prepare a written summary of the final certified MBE participation in the contract as compared to the proposed participation at the time of contract award. This should include the name of each certified MBE, the percentage and amount that was anticipated to be paid at the time of contract award, the percentage and amount actually paid, and an explanation of any differences that have occurred. Special attention should be given to any situations where the final payments to any MBE were below the level of commitment at the time of contract award. The summary shall be forwarded to the LEA with the final requisition. The LEA shall include this documentation with the submittal of the close-out paperwork to the PSCP.

6. Projects Utilizing a Construction Manager Delivery Method

This section of the procedure has been prepared based upon the utilization of Construction Manager Agency method of delivery. If another alternative method of project delivery is being considered, then these procedures would need to be adapted in consultation with the PSCP before proceeding.

a. For projects that are being designed and solicited utilizing a Construction Manager Agency delivery method with multiple prime contracts, the LEA can structure its procedures to attain the overall MBE goal and sub-goals, if applicable, for the project as presented below:

b. The MBE liaison and other LEA staff should work with the project's construction manager, cost estimator, and architect, along with any other individuals who could provide assistance, to determine the overall MBE utilization strategy for the work required, appropriate bid packages, and an appropriate overall MBE goal and sub-goals, if applicable, for each specific bid or proposal package.

c. The overall MBE goal and sub-goals, if applicable, for the project shall represent the aggregate of the individual goals and sub-goals, if applicable, set for each bid or proposal package.

d. In setting the specific goals and sub-goals, if applicable, for each solicitation package consideration should be given to the potential for MBE participation to the maximum extent possible. The information and procedures provided in section 4.0 MBE Goal Setting Procedures should be consulted and followed for these types of projects.

e. Prior to submitting the construction documents for State review and authorization to solicit bids or proposals, the LEA's representative will prepare a complete list of the individual solicitation packages and indicate the MBE goal and sub-goals, if applicable, for each solicitation package. This would include the overall MBE goal and sub-goals, if applicable, established in the solicitation documents, the estimated cost for each solicitation package, and the estimated MBE dollar amounts for each solicitation package. A copy of this list should be submitted with the construction documents. The list should be retained as a record by the LEA for comparison to the actual contracts awarded with MBE participation, and the final actual MBE participation at the completion of the project.

f. Contractors submitting bids or proposals for solicitation packages that do not include a MBE goal and sub-goals, if applicable, would not be required to submit any of the MBE schedules that are otherwise required nor would they be required to indicate that they are requesting a waiver. The LEA representative would, however, request information from the contractor at the completion of the project to determine if any certified MBE firms had participated in the contract.

g. All other submittals of MBE materials and reporting requirements are applicable for the project, including the submittal of the "Certified Minority Business Enterprise Utilization and Fair Solicitation Affidavit" and "MBE Participation Schedule" as described above in section 6.0. This includes the documentation for a request for a waiver, if applicable and appropriate.

7. Projects Utilizing an Indefinite Delivery/Indefinite Quantity (IDIQ) or Job Order Contracting (JOC) Method of Delivery:

a. The solicitation should be prepared and the overall MBE goal and sub-goals, if applicable, established based upon the type of work that is anticipated to be specified or performed under the contract and the availability of certified MBEs. This could include an analysis of the percentages of the different types of work, the estimated dollar value in the entire contract, and the availability of MBEs.

b. If an overall goal and sub-goals, if applicable, are set the bidders or offerors would be required to submit "Certified Minority Business Enterprise Utilization and Fair Solicitation Affidavit" in which they could indicate their anticipated MBE participation based upon the entire contract amount and the types of work specified. The award of contract can be made based upon their estimate of MBE participation since there is no specific task order or description of work to be performed and subcontractors have not been identified or engaged through any type of commitment or subcontract.

c. Since MBE participation is only anticipated in a general sense as an objective and specific contracts to MBEs have not been signed, then the contract award would not be included in any reporting to the PSCP or subsequent reporting to GOMA.

d. However, as the contract proceeds and individual task orders and/or purchase orders are issued, the contractor should submit the "MBE Participation Schedule" for any and all projects or work where MBE subcontractors and/or suppliers might reasonably be utilized. Discussions between the contractor or offeror and the LEA as the task orders and/or purchase orders are being developed should address this aspect of the contract requirements.

e. Any MBE participation should be recorded by the MBE liaison and reported to the PSCP as the task orders and/or purchase orders are approved.

f. The contractor shall complete the Certified Minority Business Participation Standard Monthly Contractor's Requisition for Payment (IAC/PSCP FORM 306.4), specifically page 3 of 16, Minority Business Enterprise Participation, with each requisition submitted for payment. This submittal should accurately reflect the payments to be made that month to MBEs, and the cumulative total for the period specified. Any and all MBE firms that are identified on the "MBE Participation Schedule" should be included on page 3 of the first and all subsequent requisitions for payment. Any MBEs identified during the life of the project should be added as soon as the contractor engages them.

g. At the completion of the contract period or the full utilization of the contract's value a report should be prepared by the LEA MBE Liaison and submitted to the PSCP summarizing the MBE participation in each and all of the task orders or purchase orders issued under the contract. This should include the anticipated MBE participation prior to the issuance of the solicitation, the MBE participation anticipated at the time of contract award and the actual MBE participation at the completion of the contract. The summary shall be forwarded to the LEA with the final requisition. The LEA shall include this documentation with the submittal of the close-out paperwork to the PSCP.

8. Projects Utilizing the Design/Build Delivery Method:

a. The solicitation is for both A/E services and the actual construction of a public school project. The solicitation should be prepared and the MBE goal and sub-goals, if applicable, established for the construction work that is anticipated for the project. The goal setting procedures described in Section 4.0 above should be utilized for these types of projects.

b. The bidders or offerors should be required to submit "Certified Minority Business Enterprise Utilization and Fair Solicitation Affidavit" on which they would indicate their anticipated MBE participation based upon the construction work anticipated and their understanding of the MBE goal and sub-goals, if applicable, the types of work involved, and the availability of certified MBEs for the project. Since there are no detailed plans or designs for the project and there are no contracts or subcontracts for the actual construction work there is no need to submit any other MBE schedules, at this time.

c. If the bidder, or offeror, who is to be awarded this contract has indicated that they do not anticipate achieving the overall MBE participation goal and sub-goals, if applicable, for this project on the "Certified Minority Business Enterprise Utilization and Fair Solicitation Affidavit" then they are in effect requesting a waiver. They will be required to submit documentation at a later date to justify this request.

d. As the project proceeds through the design phase and the project is nearing the completion of the construction documents for submission to the State to review, the Design/Build Team (team) in consultation with LEA representatives should discuss the opportunities and potential for certified MBEs to participate in the project.

e. The team should begin to identify potential contractors and subcontractors, opportunities to segment the project, and MBEs that could participate in the project.

f. At a point in time that is approximately 30 days prior to the anticipated construction document submission to the State; the team should complete and submit a revised "MBE Participation Schedule" to the LEA for their review and approval.

g. If the team had indicated on the original "Certified Minority Business Enterprise Utilization and Fair Solicitation Affidavit" that they would meet the goals and the information on the "MBE Participation Schedule" indicates that they did meet the goals then the team should proceed with the construction of the project.

h. If the team had indicated on the "Certified Minority Business Enterprise Utilization and Fair Solicitation Affidavit" that they did not anticipate meeting the overall MBE goal and sub-goals, if applicable, or only a portion of the goal and sub-goals, if applicable, then the "MBE Participation Schedule" should be reviewed by the LEA. The team should, at this time, submit their documentation in support of the waiver requested.

i. The proposed MBE participation should be reviewed and a determination made as to whether the team has made a good faith effort to meet the MBE goals and sub-goals, if applicable, established for the project and as stated on the revised "Certified Minority Business Enterprise Utilization and Fair Solicitation Affidavit".

j. If a request for a waiver is made and approved, "MBE Waiver Documentation" should be signed by a LEA representative and submitted to the PSCP and GOMA.

k. Since there was no MBE participation reported at the time of the award of the Design/Build contract, the LEA would submit the entire package of information, including all of the MBE related schedules to the PSCP within ten (10) days of the team being directed to proceed with the actual construction work.

l. All other submittals of MBE materials and reporting requirements are applicable for the project, as described above in Section 5.0.

7.0 RECORDS AND REPORTS

1. The MBE Liaison shall maintain such records as are necessary to confirm compliance with its Minority Business Enterprise Procedures and activities. The records shall be maintained until the project is audited by the PSCP. These records shall include by project:

   a. The contractor report submitted at the completion of the project;

   b. The identity of the minority contractors employed on the project;

   c. The type of work performed;

   d. The actual dollar value of the work, services, supplies or equipment; and

e. The MBE percentage of the total contract.

2. The MBE Liaison will maintain a record of all waivers approved for each project or solicitation package where the prime contractor was unable to achieve the established overall goal or sub-goals, if applicable. The MBE Liaison will, however, report to the PSCP all MBE participation by MDOT certified firms who are prime contractors, subcontractors, suppliers, or otherwise making an economically viable contribution to each project. This information shall be reported to PSCP within ten (10) days after approval of the award of the contract by the board of education.

3. The LEA shall submit the "Certified Minority Business Enterprise Participation Standard Monthly Contractor's Requisition for Payment" (IAC/PSCP Form 306.4 page 3 of 16, located in the Administrative Procedures Guide), to the PSCP Director of Fiscal Services as part of the regular monthly request for payment for the project.

4. The LEA shall submit the "Close-Out Cost Summary" (IAC/PSCP Form 306.6 located in the Administrative Procedures Guide), along with the "Certified Minority Business Enterprise Participation Standard Monthly Contractor's Requisition for Payment" (IAC/PSCP Form 306.4) to the PSCP Director of Fiscal Services within 180 days of completion of the project.

   a. All final MBE payments should be verified by the LEA MBE Liaison before submission to the PSCP.

5. Each quarter and at the end of each fiscal year end, the LEA will submit to the, PSCP Fiscal Services a report "Payments Made to Contractors during The Fiscal Year" and maintain such records as are necessary to confirm compliance with its minority business enterprise procedures and activities.

6. Each fiscal year end, PSCP Fiscal Services will create a report "Projects Completed during the Fiscal Year" and maintain such records as are necessary to confirm compliance with its Minority Business Enterprise Procedures and activities. This report will compare the overall MBE goal and sub-goals, if applicable, for each specific project with the MBE participation anticipated at the time of contract award and the actual MBE participation at the completion of the project.

8.0 MONITORING

1. The LEA's procurement personnel or project staff shall verify that the certified MBE's listed in the MBE participation schedule are actually performing the work.

2. The LEA's procurement personnel or project staff shall ensure that MBE subcontractors are receiving compensation as set forth in the "MBE Participation Schedule" by ensuring that the contractor submits monthly reports, listing any unpaid invoices over 30 days old received from any certified MBE subcontractor, the amount of each invoice, and the reason payment has not been made.

3. PSCP Fiscal Services will:

   a. Compile data on projects completed during the fiscal year;

   b. Confirm that all MBE subcontractors listed in the "MBE Participation Schedule" have received payment; and

   c. Maintain such records as are necessary to confirm compliance with its Minority Business Enterprise Procedures and activities.

4. The MBE Liaison and/or the PSCP will conduct reviews as deemed necessary to confirm compliance with the minority business enterprise participation requirements.

5. The MBE Liaison will maintain appropriate records, and shall assist the PSCP in on-site or post-audit reviews upon request.

6. Auditors from the PSCP will have access to and the ability to audit MBE participation for specific projects, information retained by the LEA, and/or submitted to the IAC in reports/forms filed by the LEA as referenced above.

9.0 MINORITY BUSINESS ENTERPRISE LIAISON

1. The Superintendent shall designate an individual to be identified as the MBE Liaison for the school system.

2. The MBE Liaison will be the contact person who will work with the PSCP and GOMA to implement the Minority Business Enterprise Program for the school system and the State of Maryland.

3. The Superintendent will immediately notify the PSCP if there is a change in the MBE Liaison for the school system.

10.0 PAYMENT/REIMBURSEMENT FOR ALL PSCP FUNDED PROGRAMS

1. Use IAC/PSCP Form 306.4 Page 3. ("Certified Minority Business Enterprise Participation Standard Monthly Contractor's Requisition for Payment")

2. The Prime Contractor must complete this Form and submit it with each Monthly Requisition/Invoice for Payment for each project in which they are seeking payment from either the Local Education Agency (LEA) or State of Maryland Public School Construction Program. If no MBE Sub-Contractors were utilized on a project (i.e., no MBE goals were set for the project and/or full waiver was granted), this Form must still be submitted by the Prime Contractor.

    a. IAC/PSCP Form 306.4 Page 3 must be PROJECT specific – If one bid/contract covers multiple projects (either different schools or scopes of work), this Form must be calculated and submitted by the Prime Contractor on an individual project basis.

    b. IAC/PSCP Form 306.4 Page 3 must be Prime Contractor/Trade Package specific – If the IAC recognized multiple Prime Contractors and/or Trade Packages, this Form must be completed by each Prime/Trade Contractor recognized by the IAC and submitted.

3. All ORIGINAL MBE Sub-Contractors must be listed on this Form with their full company name, MDOT Certification Number, MDOT Classification and ORIGINAL Contract Amount as stated on the "MBE Participation Schedule" and "Minority Business Enterprises Subcontractor Project Participation Statement". (ONLY MDOT Certified companies should be listed on this Form.)

4. Any additional MBE Sub-Contractors utilized on a project must be listed on this Form with their full company name, MDOT Certification Number, MDOT Classification and total contract amount. (ONLY MDOT Certified companies should be listed on this Form.)

5. The Prime Contractor should fill in the amount they intend to pay each MBE Sub-Contractor for the current requisition as well as all money paid to date. By signing this Form, the Prime Contractor is certifying their intent to pay the "Amount to be Paid This Requisition". They are also certifying the distribution of money listed under the "Total Paid to Date" column.

6. The LEA MBE Liaison shall verify each month with the MBE Sub-Contractors that all money listed under the "Total Paid to Date" column has been received from the Prime Contractor. By signing this Form, the LEA MBE Liaison is certifying all MBE Sub-Contractors have been paid all money due to them by the Prime Contractor.

7. The MBE Liaison should also be comparing the current Form with the prior month(s) to make sure information is not being duplicated and/or repeated. Payments to MBE Sub-Contractors should be progressive and recorded.

8. If for any reason, an amount the Prime Contractor listed on the Form as intending to pay the MBE Sub-Contractor was not made, or if the payment amount changed, the LEA MBE Liaison should be inquiring about the change in payment or non-payment to the MBE Sub-Contractor.

9. NO REQUESTS FOR PAYMENT/REIMBURSEMENT SHOULD BE SUBMITTED TO PSCP UNTIL THE PROCEDURES ABOVE HAVE BEEN COMPLETED.

11.0 CLOSE-OUT SUMMARY SUBMISSION

1. Use IAC/PSCP Form 306.6 ("Close Out Cost Summary").

2. The Prime Contractor must complete this Form and submit it with the FINAL Requisition (IAC/PSCP Form 306.4) to the LEA or upon LEA request. If no MBE Sub-Contractors were utilized on a project (i.e. no MBE goals were set for the project and/or a full waiver was granted), this Form must still be submitted by the Prime Contractor.

   a. IAC/PSCP Form 306.4 Page 3 must be PROJECT specific – If one bid/contract covers multiple projects (either different schools or scopes of work), this Form must be calculated and submitted by the Prime Contractor on an individual project basis.

   b. IAC/PSCP Form 306.4 Page 3 must be Prime Contractor/Trade Package specific – If the IAC recognized multiple Prime Contractors and/or Trade Packages, this Form must be completed by each Prime/Trade Contractor recognized by the IAC and submitted.

3. All ORIGINAL MBE Sub-Contractors must be listed on this Form with their full company name, MDOT Certification Number, MDOT Classification and ORIGINAL Contract Amount as stated on the "MBE Participation Schedule" and "Minority Business Enterprises Subcontractor Project Participation Statement" (ONLY MDOT Certified companies should be listed on this Form.)

4. Any additional MBE Sub-Contractors utilized on a project must be listed on this Form with their full company name, MDOT Certification Number, MDOT Classification and total contract amount. (ONLY MDOT Certified companies should be listed on this Form.)

5. The Final Form 306.4 should reflect ALL money paid to each MBE Sub-Contractor. There is a column on the Form to answer "Yes" or "No" for the MBE Sub-Contractor being paid in full. There is also a column on the Form for the Prime Contractor to state a brief reason if a MBE Sub-Contractor was paid less than the original contract amount stated on the "MBE Participation Schedule" and "Minority Business Enterprises Subcontractor Project Participation Statement". By signing this Form, the Prime Contractor is certifying the MBE Sub-Contractors have been paid in full for this project.

6. The LEA MBE Liaison shall verify with the MBE Sub-Contractors that all money listed under the "Total Paid to Date" column has been received and no additional money is owed to them by the Contractors have been paid in full by the Prime Contractor for this project.

7. NO CLOSE-OUT COST SUMMARY SHOULD BE SUBMITTED TO PSCP UNTILTHE ABOVE PROCEDURES HAVE BEEN COMPLETED.

<u>Additional Submission Requirements Applicable to All State Funded Projects</u>

1. If an ORIGINAL MBE Sub-Contractor listed on the "MBE Participation Schedule" and "Minority Business Enterprises Subcontractor Project Participation Statement" is not paid in full and/or not utilized on a project, the Prime Contractor shall submit in writing an explanation for either the reduction in contract amount/payment or why the MBE Sub-Contractor was not utilized.

2. It is the responsibility of the LEA MBE Liaison to contact the MBE Sub-Contractor to verify the explanation provided by the Prime Contractor. Any correspondence between the LEA MBE Liaison and both the Prime Contractor and MBE Sub-Contractors should be kept by the LEA and be made available to PSCP upon request or audit.

3. If an MBE Sub-Contractor originally listed on the "MBE Participation Schedule" and "Minority Business Enterprises Subcontractor Project Participation Statement" becomes unavailable and/or is not going to be utilized. This information should be communicated to the PSCP MBE Program Manager and the PSCP Finance Department by the LEA immediately.

4. If additional MBE Sub-Contractors are hired after the "MBE Participation Schedule" and "Minority Business Enterprises Subcontractor Project Participation Statement" have been submitted to PSCP, the LEA MBE Liaison must submit this information to the PSCP MBE Program Manager and the PSCP Finance Department immediately.

12.0 LIQUIDATED DAMAGES PROVISION FOR CONTRACTS CONTAINING MINORITY BUSINESS ENTERPRISE PARTICIPATION GOALS

Chapter 154, Laws of Maryland 2012 required the Board of Public Works (BPW) to promulgate a regulation that included a requirement that all contracts containing minority business enterprise participation goals contain a liquidated damages provision that applies in the event that the contractor fails to comply in good faith with the provisions of the Subtitle 11 of Title 21 or the pertinent terms of the applicable contract. See § 14-303(b) (5), State Finance and Procurement Article, Maryland Annotated Code (SFP).

The regulation promulgated by the BPW, effective May 13, 2013, states that: "All contracts containing certified MBE participation goals shall contain a liquidated damages provision that applies if the contractor fails to comply in good faith with the provisions of State MBE laws or the pertinent terms of the procurement contract." Code of Maryland Regulations (COMAR) 21.11.03.10(E).

Approved:

Original signed by

_____
Theresa R. Alban
Superintendent of Schools

Outreach Efforts Compliance Statement

****Complete and submit this form within 10 business days of notification of apparent award ****

In conjunction with the bid or offer submitted in response to Frederick County Public Schools for the solicitation for _____project, PSC#_____, I affirm the following:

1. Bidder/Offeror identified opportunities to subcontract in these specific work categories (extend list as needed):
   a. _____ d. _____
   b. _____ e. _____
   c. _____ f. _____

2. Attached to this form are copies of written solicitations (with bidding instructions) used to solicit certified MBEs for these subcontract opportunities.

3. Bidder/Offeror made the following attempts to contact personally the solicited certified MBEs (extend list as needed):
   a. _____
   b. _____
   c. _____
   _____

4. Select ONE of the following:

   a. ☐ This contract does not involve bonding requirements.

   OR

   b. ☐ Bidder/Offeror assisted certified MBEs to fulfill or seek waiver of bonding requirements (*describe efforts*).

5. Select ONE of the following:

   a. ☐ Bidder/Offeror did/did not attend the pre-bid/proposal conference.

   OR

   b. ☐ No pre-bid/proposal conference was held.

_____ By: _____
Bidder/Offeror Printed Name Signature: _____
Title: _____
Date: _____
Address: _____
_____
_____

October 2017

Attachment D

MINORITY BUSINESS ENTERPRISES SUBCONTRACTOR PROJECT PARTICIPATION STATEMENT

PROJECT/ SCHOOL NAME: _____

PROJECT/ SCHOOL LOCATION: _____

LEA: _____

NAME OF PRIME CONTRACTOR: _____

NAME OF MBE SUBCONTRACTOR: _____

_____ _____
MDOT Certification Number NAICS Code

1. Work/Services to be performed by MBE Subcontractor: _____

_____

2. Subcontract Amount: $ _____ Participation Amount $_____
3. Bonds - Amount and type required of Subcontractor if any: _____
4. MBE Anticipated or Actual Commencement Date: _____ Completion Date: _____
5. This MBE subcontract represents the following percentage of the total contract cost: _____
6. This is an African American Firm: Yes _____ No _____
7. This is an Asian American Firm: Yes _____ No _____
8. This is a Native American, Hispanic or Disabled Firm: Yes _____ No _____
(Circle One)

****

The undersigned subcontractor and prime contractor will enter into a contract for the work/service indicated above upon the prime contractor's execution of a contract for the above referenced project with the Board of Education. The undersigned subcontractor is a MDOT certified Minority Business Enterprise. The terms and conditions stated above are consistent with our agreements.

Signature of Subcontractor: _____

Date: _____

The term and conditions stated above are consistent with our agreements.

Signature of Prime Contractor: _____

Date: _____

MINORITY SUBCONTRACTOR UNAVAILABILITY CERTIFICATE

1. It is hereby certified that the firm of _____
(Name of Minority firm)

located at _____
(Number) (Street)

_____
(City) (State) (Zip)

was offered an opportunity to bid on the _____ school project

in _____ County by _____
(Name of Prime Contractor's Firm)

****

2. _____ (Minority Firm), is either unavailable for the work/service or unable to prepare a bid for this project for the following reason(s):

_____

_____

_____

_____ _____ _____
Signature of Minority Firm's MBE Representative **Title** **Date**

_____ _____
MDOT Certification # Telephone #

3. To be completed by the prime contractor if Section 2 of this form is <u>not</u> completed by the minority firm.

To the best of my knowledge and belief, said Certified Minority Business Enterprise is either unavailable for the work/service for this project, is unable to prepare a bid, or did not respond to a request for a price proposal and has not completed the above portion of this submittal.

_____ _____ _____
Signature of Prime Contractor Title Date

October 2017

Attachment F

MBE WAIVER DOCUMENTATION

Project Name: _____ **PSC No.** _____

Base Contract Amount **$** _____

Plus Accepted Alternates **$** _____

Equals Total Contract Amount **$** _____

I have previously requested that a waiver be granted to the overall MBE goal for this project of _____ percent, with a minimum of ____ percent from certified African American-owned businesses, a minimum of ____ percent from certified Asian American-owned businesses, and the balance from all certified minority business enterprises, if applicable. This would include the total dollar value of all materials, supplies, equipment, and services, including construction services directly or indirectly, from Minority Business Enterprises (MBE) which are currently certified by the Maryland Department of Transportation (MDOT).

I _____ **, hereby certify that my position is**
(Name of Company Representative)

_____ **, and I am the duly authorized representative of**
(Position Title)

_____ .
(Company Name)

I further certify that I have submitted a *Schedule for Participation of Certified Minority Business Enterprises* which reflects the percentage and dollar value of certified Minority Business Enterprise participation which my company expects to achieve for this contract. Therefore, the request for the waiver is as follows:

Summary MBE Participation Schedule from Attachment B

Minority Group	MBE GOAL		Actual MBE Participation		Request For Waiver	
	Dollar Value of Total Contract*	Percent of Total Contract	Dollar Value	Percent of Total Contract	Dollar Value	Percent of Total Contract
a. Sub Goal African American						
b. Sub Goal Asian American						
c. Other * in Sub Goal group a/b above						
TOTALS						

*** with accepted/rejected alternates**

To support this request for a waiver, I include the following information as attachments which I certify to be true to the best of my knowledge.

1. **A detailed statement of the efforts made by the contractor to identify and select portions of the work proposed to be performed by subcontractors in order to increase the likelihood of achieving the stated goal;**

2. **A detailed statement of the efforts made by the contractor *prior to and up to 10 days before the bid opening* to solicit minority business enterprises through written notices that describe the categories of work for which subcontracting is being solicited, the type of work to be performed, and specific instructions on how to submit a bid;**

3. **A detailed statement of the contractor's efforts to make personal contact with MBE firms identified for Item 2. above;**

4. **A record of the name, address, telephone number, and dates contacted for each MBE identified under items 2. and 3. above;**

5. **A description of the information provided to MBE's regarding the plans, specifications and the anticipated time schedule for portions of the work to be performed;**

6. **Information on activities to assist minority business enterprises to fulfill bonding requirements, or to obtain a waiver of these requirements;**

7. **Information on activities to publicize contracting opportunities to minority business enterprises, attendance at pre-bid meetings, or other meetings scheduled by the MBE Liaison or designated representative;**

8. **As to each MBE that placed a subcontract quotation or offer which the apparent low bidder or successful offeror considers not to be acceptable, a detailed statement of reasons for this conclusion; and**

9. **A list of minority subcontractors found to be unavailable. This shall be accompanied by a *Minority Subcontractor Unavailability Certificate* signed by the minority business enterprise or from the apparent low bidder or successful offeror indicating that the minority business did not provide the written certification.**

Signature _____ **Date** _____
(Company Representative Name)

Sworn and subscribed before me this _____ **day.**

of _____ **in the year** _____ **Notary Public** _____

Reviewed and accepted by the _____ **County Board of Education MBE Liaison.**
(County Name)

Signature _____ **Date** _____
(County Representative Name)

IAC/PSCP FORM 306.4

Attachment G

CERTIFIED MINORITY BUSINESS ENTERPRISE PARTICIPATION

STANDARD MONTHLY CONTRACTOR'S REQUISITION FOR PAYMENT

LEA: _____ **DATE:** _____

FACILITY NAME: _____ **PSC NO:** _____

SCOPE OF WORK: _____ **REQ NO:** _____

Name of MBE Sub-Contractor	MDOT Certification Number and Classification	TOTAL MBE Contract Amount	Amount to be Paid THIS Requisition	TOTAL Paid to Date	MBE has Received FINAL Payment?	If amount paid is LESS than TOTAL MBE Contract Amount, EXPLAIN VARIANCE
	TOTAL:	**$**	**$**	**$**		

MDOT Certification Number and Classification can be located at http://mbe.state.mdot.state.md.us/diretory/

MBE Classification :

African American = AA
Hispanic American = H
Native American = N
Asian American = A
Women = W
African American/Women = AAW
Hispanic American/Women = HW
Native American/Women = NW
Asian American/Women = AW

I certify that the figures and information presented above represent accurate and true statements that timely payments have been and will be, made to suppliers and subcontractors on the project, as requisitioned payments are received, and in accordance with our contracts.

_____ _____

Name of Contractor Firm — Authorized Contractor Signature/Date

_____ _____

Contractor Federal Tax ID# — Contractor MBE Classification # (if applicable)

_____ _____

Name of LEA MBE Liaison (Printed) — Signature of LEA MBE Liaison/Date

Attachment H

IAC/PSCP FORM 306.6

CLOSE-OUT COST SUMMARY

LEA: _____ DATE: _____

SCHOOL NAME: _____ PSC # : _____

	Public School Construction	Local and Other
Allocation:		
Cash Disbursements:		

	Approved Contracts	Expenditures	Balance	Approved Contracts	Expenditures	Total Expenditures
Construction			$0			.
A/E			$0			$0
Related Costs			$0			$0
Total	$0	$0	$0	$0	$0	$0

I hereby certify that the data shown hereon is correct and request this project be closed.

_____
Signature of LEA Representative

FOR STATE USE ONLY

ADJUSTMENTS:

Allocation: _____

Cash: _____

Initials	
Date	

AUDIT COMMENTS:

Initials	
Date	

Revised 7/1/00

MBE PROGRAM SUBGOAL WORKSHEET – Appendix I

This Worksheet must be completed for all procurements that have an overall goal. It requires the approval of the Procurement Officer and the MBE Liaison, who also must sign the Worksheet. Each unit must maintain a copy of the Worksheet as a part of the Procurement Review Group (PRG) documentation for the procurement.

Agency/Unit:	
Project Description:	Solicitation No.
Approvals: _____ _____ Signature of Procurement Officer Date ~~Signature of MBE Liaison~~ ~~Date~~	
1. What is the expected value of the procurement (excluding options)?	$
2. Does the expected value of the procurement equal or exceed $200,000?	( ) Yes ( ) No
☑ If **YES**, completion of the rest of this Worksheet to determine the appropriate subgoals, if any, is mandatory. ☑ If **NO**, the unit may, at its discretion, determine that subgoals will not be set for the procurement. If, however, the unit determines that subgoals should be set, the rest of this Worksheet must be completed to determine the appropriate subgoals, if any.	
3. Select, from Table 1 below, the Major Industry Category for the procurement based on the definitions in COMAR 21.01.02.01.	
4. What is the Combined Industry Category, from Table 1 below, based on the Major Industry Category selected for the procurement in Step 3?	

TABLE 1 – INDUSTRY CATEGORY CONVERSION CHART

Major Industry Category	**Combined Industry Category**
Architectural & Engineering	AE-CRS
Construction	Cons
Construction Related Services	AE-CRS
Human, Cultural, Social & Educational Services	Serv
IT Services	IT IT
IT Supplies & Equipment	Main
Maintenance	Serv
Services	CSE
Supplies & Equipment	

5. Check the appropriate column for the Combined Industry Category in Table 2 below based on the answer to Step 4.	
6. What is the Subgoal Total Plus 2% Margin shown in the last line of Table 2 below for the Combined Industry Category?	%
7. What is the overall MBE participation goal for the procurement?	%
8. Does the overall MBE participation goal for the procurement equal or exceed the Subgoal Total Plus 2% Margin? (Compare Steps 6 and 7)	( ) Yes ( ) No
☑ If **YES**, proceed with the remaining steps in this Worksheet. ☑ If **NO**, do not set any subgoals for the procurement.	
9. For Column 9 in Table 2, insert the number of certified firms available to perform the work of the procurement for each Subgroup that has a Recommended Subgoal. (NOTE: For purposes of determining the number of certified firms in a Subgroup, count dually certified firms as being owned by a member of the relevant racial or ethnic Subgroup, not as a woman-owned firm.)	
10. For column 10 in Table 2, insert a "Y" (for Yes) or "N" (for No) to indicate whether the number of certified firms in a Subgroup that has a Recommended Subgoal equals or exceeds 3 firms.	

TABLE 2 – RECOMMENDED SUBGOALS

Combined Industry Category (Check appropriate column per Step 5.)			**Cons** ☐	**AE-CRS** ☐	**Main** ☐	**IT** ☐	**Serv** ☐	**CSE** ☐
9. # of Firms	**10. ≥ 3 Y/N**	**Subgroups**						
		African American	7%	6%	8%	7%	7%	6%
		Hispanic American	—	2%	3%	2%	—	—
		Asian American	4%	—	3%	—	4%	5%
		Women	—	9%	—	8%	12%	10%
Subgoal Total			11%	17%	14%	17%	23%	21%
***Subgoal Total Plus 2% Margin**			**13%**	**19%**	**16%**	**19%**	**25%**	**23%**

***The *Subgoal Total Plus 2% Margin* is the sum of the Recommended Subgoals plus 2%.**

☑ **Refer to Table 2 above. If there are 3 or more certified firms in a Subgroup for the work of the procurement (indicated by a "Y" in Column 10), the Recommended Subgoal for the Combined Industry Category in Table 2 should be set for that Subgroup unless an explanation is provided in Step 11.**

☑ **A subgoal may not be set if the number of certified firms in that Subgroup is less than 3 (indicated by an "N" in Column 10).**

11. The following Recommended Subgoals have not been set because:

DIVISION 0

CONDITIONS OF THE CONTRACT

BUSHEY FEIGHT MORIN ARCHITECTS INC.
473 NORTH POTOMAC STREET
HAGERSTOWN, MARYLAND 21740
301-733-5600 FAX: 301-733-5612

Frederick County Public Schools
LINCOLN 'A' FACILITY
- ROOF REPLACEMENT

FCPS Bid No. 21C5

BFM Project No. 20045

SPECIFICATION & DRAWING INDEX

SPECIFICATION INDEX

DIVISION 0 - CONDITIONS OF THE CONTRACT (by FCPS)

Directory

Frederick County Introduction (by FCPS)

DIVISION 1 - GENERAL REQUIREMENTS

Section 01 01 00 -	Summary of Work	01 01 00-1 - 01 01 00-7
	Roof Core Report	4 pages
	Asbestos Containing Roofing Materials Survey	14 pages
Section 01 01 90 -	Contract Considerations	01 01 90-1
Section 01 02 70 -	Applications for Payment	01 02 70-1 - 01 02 70-2
Section 01 02 80 -	Change Order Procedures	01 02 80-1 - 01 02 80-3
Section 01 03 90 -	Coordination and Meetings	01 03 90-1 - 01 03 90-3
Section 01 04 10 -	Coordination	01 04 10-1 - 01 04 10-3
Section 01 04 50 -	Cutting and Patching	01 04 50-1 - 01 04 50-2
Section 01 20 00 -	Price and Payment Procedures	01 20 00-1 - 01 20 00-4
Section 01 20 50 -	Procedures and Controls	01 20 50-1 - 01 20 50-5
Section 01 33 00 -	Submittals Procedures	01 33 00-1 - 01 33 00-5
Section 01 40 00 -	Quality Control	01 40 00-1 - 01 40 00-2
Section 01 50 00 -	Construction Facilities & Temporary control	01 50 00-1 - 01 50 00-7
	Appendix E – Construction Sign	2 Pages
Section 01 60 00 -	Material and Equipment	01 60 00-1 - 01 60 00-4
Section 01 70 00 -	Contract Closeout	01 70 00-1 - 01 70 00-2
Section 01 73 20 -	Selective Demolition	01 73 20-1 - 01 73 20-7
Section 01 74 00 -	Warranties and Bonds	01 74 00-1 - 01 74 00-2

DIVISION 2 – SITE WORK

Section 02 22 50 -	Demolition	02 22 50-1 - 02 22 50-4

DIVISION 5 – METALS

Section 05 31 00 -	Steel Deck	05 31 00-1 - 05 31 00-3
Section 05 50 00 -	Metal Fabrication	05 50 00-1 - 05 50 00-6

DIVISION 6 – WOOD AND PLASTIC

Section 06 06 00 -	Rough Carpentry	06 06 00-1 - 06 06 00-4

DIVISION 7 - THERMAL AND MOISTURE CONTROL

Section 07 22 00 -	Roof and Deck Insulation	07 22 00-1 - 07 22 00-6
Section 07 54 10 -	Thermoplastic Polyolefin (TPO) Membrane Roofing	07 54 10-1 - 07 54 10-16

Section 07 62 00 - Sheet Metal Flashing and Trim 07 62 00-1 - 07 62 00-16
Section 07 71 00 - Manufactured Roof Specialties 07 71 00-1 - 07 71 00-2
Section 07 92 00 - Joint Sealants 07 92 00-1 - 07 92 00-5

DIVISION 9 – FINISHES

Section 09 90 00 - Paints and Coatings 09 90 00-1 - 09 90 00-4

DIVISION 23 - MECHANICAL

Section 23 01 10 - Mechanical/ Electrical General Requirements 23 01 10-1 - 23 01 10-4
Section 23 16 00 - Roof Drains 23 16 00-1 - 23 16 00-3

DRAWING INDEX

CS-1 Cover Sheet

A1.1 Roof Plan/ Notes
A1.2 Roof Details
A1.3 Roof Details

DIVISION 1

GENERAL REQUIREMENTS

BUSHEY FEIGHT MORIN ARCHITECTS INC.
473 NORTH POTOMAC STREET
HAGERSTOWN, MARYLAND 21740
301-733-5600 FAX: 301-733-5612

PART 1 ─ GENERAL

1.01 SECTION INCLUDES

A. Contract Description

B. Work by Contractor

C. Contractor use of site and premises.

D. Owner occupancy.

E. Disposal of materials.

F. Unit prices.

G. Utilities.

H. Roof Core Cuts

I. Contractor Staging and Parking.

J. Hazardous Materials.

K. Contract Drawings and Technical Specification

L. Commencement of Work and Substantial Completion.

M. Time schedule and liquidated damages.

1.02 CONTRACT DESCRIPTION

A. Contract Type: Stipulated Sum Price and Unit Prices.
   1. INTENTION OF PLANS AND SPECIFICATIONS: The intent of the Drawings and Specifications is to describe the Work that the Contractor undertakes, in full compliance with the Contract, and it is understood that the Contractor will furnish all materials, machinery, equipment, tools, supplies, transportation, labor, permits and all other incidentals necessary to the satisfactory execution and completion of the work. The plans and specifications are complementary, and what is called for by either is as binding as if called for by both.

B. Plans and Specifications:
   1. Contractor must notify architect of any omissions, contradictions or conflicts. Architect will provide necessary corrections or additions to plans and specifications by addendum. If Contractor does not so notify architect of any such condition, it will be assumed that the contractor has included the necessary items in their proposal to complete this specification.
   2. It is the intent that this be a completed project as far as the contract documents set forth. It is not the intent that different phases of work on this project be delegated to various trades and subcontractors by the contract documents. The roofing contractor must make their own contracts with various subcontractors, setting forth the work these subcontractors will be held responsible for. The roofing contractor alone will be held responsible for the work of his / her subcontractor for the completed project. The roofing contractor is required to have his subcontractor comply with all Owner and OSHA safety and security requirements.
   3. If the contractor feels a conflict exists between what is considered good roofing practice and these specifications the contractor shall state in writing all objections 7 days prior to submitting quotations.
   4. Roofing contractor shall have his own supervision on site at all times when his subcontractors are present.

5. Owner is not aware that any flashing or existing roof materials that contain asbestos exists. Contractor shall remove any asbestos containing material above roof deck and is responsible to verify. See Article 1.11.

1.03 WORK BY CONTRACTOR.

A. Work under this contract includes:
   1. Furnish and install specified roofing and related components to the specified roofs by the roofing contractor.
   2. Disconnection and re-connection of utilities to roof top mechanical equipment or removal of equipment as identified shall be by FCPS Maintenance Department.

B. Protection:
   1. Contractor shall be responsible for the full and adequate protection of the Owner's facilities, existing roof systems, personnel, equipment, products and materials, as well as protection of its own employees and equipment. Contractor shall comply with all applicable federal, state, and local OSHA, EPA, and NIOSH requirements. Lawns, shrubbery, paved areas, and buildings shall be protected from damage. Repair damage at no extra cost to Owner.
   2. Daily Housekeeping:
      a. Prior to leaving the site daily the roofing contractor shall remove all trash from the roofing project and grounds such as paper, insulation or pieces and all other trash/scrap generated by the roofing crew. All subcontractors shall remove all trash generated by their respective work daily.
      b. The site will be acceptable to the project superintendent prior to the crew departing the site, the project superintendent shall conduct a daily walk to make sure the roof and grounds are left in a satisfactory condition.
      c. Roofing contractor shall protect existing roof systems by placing temporary plywood walkways in areas of access.
      d. The contractor will provide interior protection and dust control means to areas that are open to the existing structural deck.
   3. The roofing contractor shall perform appropriate inspections, surveys including Pre-Job photo/video documentation, and file timely notifications to proper authorities prior to starting roof renovation or demolition activities. Inspectors, project planners, project managers, sub-contractors and workers involved in the roof project shall have no less than 10 years of training, licenses and registrations.
   4. Contractor will provide a full time superintendent employed by the prime contractor for not less than 10 years. Superintendent will be the first person on the project and the last one to leave each day.
   5. The roofing systems manufacturer shall provide an inspector with experience of not less than 5 years of this type of roofing. The inspector shall visit the site during replacement of roofing, flashings, tie-ins, etc. at start up, 25, 50, 75, and 100% completion milestones and shall submit a report documenting such visit. Inspector cannot be employed by the roofing contractor.

C. Scope of Work: Base Bid – TPO Single Ply Membrane – Fully Adhered.
   1. Roof Replacement Areas:
      a. Refer to roof plan drawing for roof area locations.
      b. Due to size of this project, the building will be occupied by staff during the roof replacement.
   2. Contractor shall supply all labor, transportation, material, apparatus, tools, and permits necessary for removal and replacement of the existing roof systems
      a. All roofing applications shall be in accordance with specifications and details.
      b. Contractor shall verify roof construction and square footage and location of roof mounted equipment.
      c. Provide manufacturer's product data and material safety data sheets for all materials used including metal work and ladders. All data sheets shall

show the same product name as it appears on the materials that are installed.

d. No materials shall be provided to job site containing asbestos.

3. The roofing contractor is responsible for ensuring all roof drainage and downspouts included in the specified roof replacement work are free flowing. Flush to verify free flowing prior to the project start and at the project completion. The contractor shall notify Owner if any roof drains/ downspouts are found slow flowing or inoperative prior to the project start.
4. Contractor shall verify all vent pipes being flashed are in working order. Contractor shall notify FCPS if any vents are clogged.
5. Complete removal and disposal of existing roofing system including but not limited to membrane, flashings, metal flashings, scuppers, downspouts, insulation, wood blocking and accessories down to the underlying roof decking.
6. Prepare the roof substrate prior to installing the new roof system.
   a. Replace or repair existing defective decking on an additional per square foot cost above the quantity noted for the base bid.
   b. Remove and dispose of obsolete rooftop curbs, pitch pockets and miscellaneous penetrations. Caution shall be exercised for attachment of new materials and removal of existing items from deck surface. Install new roof decking or metal plating over opening.
      1) Install 1/8 inch steel plate over openings less than 2 by 2 ft. and 1/4 inch steel plate over openings larger than 2 by 2 ft.
      2) Lap plate over decking minimum 6-inches on all sides.
      3) Mechanically attach plating to decking a minimum of 12-inches o.c.
      4) Owner shall identify items to be removed (See paragraph 1.3.A.2).
   c. Install pressure treated wood blocking as required to match new insulation heights at wall junctions, roof edges, and penetrations and as indicated on detail drawings.
   d. Raise existing roof curbs and plumbing vent stacks to minimum 8-inches above the new roof surface.
   e. At existing A/C pipe penetration curbs, install new detail for piping through roof deck per manufacturer's recommendation. These include the curbs that have the plastic tops which shall not remain. Work includes reworking existing Freon and electrical conduit lines as required to accommodate new curb installation and raising height as necessary including recharging Freon lines. A/C and electrical work shall be performed by FCPS Maintenance personnel.
7. Install new roof insulation system including flat stock and tapered to meet minimum R-30 avg. R Value.
8. Install new tapered roof insulation system.
   a. Install base insulation layers, mechanically attach 1st layer. Other layers shall be adhered.
   b. Metal Roof Deck Areas (Option)
      1) Prime metal deck and install polyisocyanurate insulation as noted. Priming metal deck with a water-based primer at 150 sq. ft. per gallon, then adhere base layer of insulation to metal deck with solvent free insulation adhesive at 2 gallon per 100 sq. ft.
   c. All other layers adhered with solvent free insulation adhesive.
   d. Provide flat stock insulation at areas of slope in deck. Provide tapered insulation to achieve 1/4" per ft. slope and deck is level.
   e. Install and adhere 4 by 4 ft. tapered insulation sumps at roof drain locations.
   f. Install tapered polyisocyanurate insulation saddles and crickets with minimum 1/2-inch per foot slope.
      1) Install tapered insulation between roof drains, scuppers and along valley lines to provide positive water drainage. Adhere insulation in application solvent free insulation adhesive per base bid per cold applied system.

2) Tapered insulation saddle and cricket slope shall equal a minimum of twice the roof slope.
The contractor is responsible for the elimination of ponding water along valley lines.

g. Install top insulation layers.
1) Install 1/4 inch thick, gypsum based cover board top layer to insulation layer. Adhere insulation in application of solvent free insulation adhesive at 2 gal per 100 sq ft.
2) Install and adhere tapered edge strips where blocking height exceeds insulation height.

h. Adhere insulation layers, tapered edge and cant strips in full application of solvent free insulation adhesive (low rise foam). Walk boards into adhesive immediately after installation to achieve solid contact.

9. Install .60 mil TPO single ply membrane roofing system including all flashings and accessories.
a. Set in manufacturer's recommended low VOC bonding adhesive.
b. Install new flashings at plumbing stack locations.
c. Extend TPO to cover vertical wall surface.

10. Install base flashings.
a. Install new flashings at roof drain and plumbing stack locations.
b. Secure top edge of cap flashing membrane with metal termination bar. Seal termination bar with sealant as required to keep flashing system watertight.

11. Install new curb details.

12. Remove all capped curbs that are not being used.

13. Install all sheet metal details per specifications SMACNA requirements and standards.
a. Install new minimum 24 gauge stainless steel metal flashings at all metal flashing locations unless specified otherwise.
b. Install new stainless steel expansion joint and area divider metal cover.
c. Install new .040 Aluminum metal counterflashings. Cut-in new reglet joints.
d. Install new stainless steel pitch pocket assembly.
e. Install new slip metal counter flashing detail at non-removable unit locations.
f. Install miscellaneous metal flashings and related accessories.

14. Install the following new details where applicable:
a. Wall Flashing on Wall Supported Deck
b. Piping through Roof Deck
c. Roof Edge with Gutter
d. Roof Edge at Rake
e. Pitch Pocket with Grout
f. Metal Sleeve and Storm Collar
g. Plumbing Vent Flashing
h. Wood Curb
i. Metal Curb
j. Roof Hatch
k. Daily Waterstop / Tie- In
l. Gauge & Thickness Guide (Minimum)

15. Re-use tremline roof edge. Provide new metal coping and edge metal.

16. Install new walkway pads at roof access points, around all HVAC equipment and at top and bottom of ladder access points.

17. Clean wall areas of all old supports, brackets, etc. and fill all holes; remove all asphalt or adhesive smears, new or existing.

18. Repair all dented exhaust fan and vent hoods. Remove hoods and pound out depressions with a mallet to return hood to its original shape. Re-install hood with all fasteners where removed are installed with new fasteners of similar type.

19. Paint all roof top equipment, vents, ladders, fans, etc. Do not paint over existing data plates.

20. Remove and replace (1) existing roof hatch.
21. Removal of asbestos pitch pockets and proper disposal.

1.04 CONTRACTOR USE OF SITE AND PREMISES

A. Limit use of site and premises to allow FCPS's daily business operations.

B. Construction Operations: Limited to areas noted on Drawings.

C. Existing Emergency Building Exits shall be usable at all times during Construction.

D. Time Restrictions for Performing Exterior Work: 7:00 A.M. to 8:00 P.M. Monday thru Saturday. 1:00 P.M. to 6:00 P.M. on Sunday.

E. Construct Work in phases to accommodate Owner's occupancy requirements during the construction period; coordinate construction schedule and operations with project superintendent, Owner and School's onsite representative.

1.05 OWNER OCCUPANCY

A. The Owner will occupy the premises during construction for their normal business operation activities.

B. The Owner may contract for work independent of the specified scope of work. The Contractor shall cooperate and coordinate with the Owner and other Contractors.

C. Cooperate with Owner to minimize conflict, and to facilitate Owner's operations.

D. Schedule the Work to accommodate this requirement.

E. Protect interior areas as necessary

F. At no time will use of tobacco or alcohol be permitted on site. In addition, no "statement" clothing will be permitted to be worn on site. If the Owner or Architect discovers the Contractor, employee of Contractor or subcontractor in violation of these items, immediate expulsion from job site will be enforced.

G. No firearms will be permitted on site.

H. Criminal Record: The Contractor shall be responsible to notify the Owner's representative and campus security of any employee having a criminal record. Such information shall be kept confidential.

1.06 DISPOSAL OF MATERIALS

A. The contractor shall be responsible for the removal and disposal of materials in accordance with governing codes at no additional cost to the Owner.

B. Do not re-use, re-cycle or dispose of material manufacturer's product containers except in accordance with all applicable regulations. The user of manufactured products is responsible for proper use and disposal of product containers.

1.07 UNIT PRICES

A. Materials which may be required for roof deck or roof edge repair have been included in the Base Bid cost and are identified within the proposal form.

B. Unit prices are required on the following items to provide for the addition or deletion of work if the Engineer's estimated quantities vary more than $\pm$10 percent from the actual work required. Unit prices shall include all supervision, labor, equipment, materials, mark-up, overhead and profit are required. These prices are based on performance during the period of the contract. Do not (>10%) the estimated quantity of work without written notice from Frederick Co. Public Schools. Unused quantities shall be credited from the contract at the end of the project per the unit price cost.

C. The material quantities and their installation to be included in the Base Bid and identified on the Form of Proposal as follows:

1. Unit Price No. 1 (UP-1): Patch holes in the metal deck less than one square foot (1 s.f.) each; Quantity: 20 s.f.
2. Unit Price No. 2 (UP-2): Replace deteriorated metal deck in quantities greater than one square foot (1 s.f.) each; Quantity: 300 s.f.
3. Unit Price No. 3 (UP-3): Replace deteriorated wood blocking with 2x4 pressure treated lumber; Quantity: 200 lineal feet (l.f.)
4. Unit Price No. 4 (UP-4): Replace deteriorated wood blocking with 2x6 pressure treated lumber; Quantity: 200 lineal feet (l.f.)
5. Unit Price No. 5 (UP-5): Replace deteriorated wood blocking with 2x8 pressure treated lumber; Quantity: 200 lineal feet (l.f.)

1.08 UTILITIES

A. Utilities serving roof top equipment will be disconnected and reconnected by FCPS Maintenance Staff at the request of the roofing contractor.

1.09 ROOF CORE CUTS

A. For information purposes only, see attached report for the core cuts taken on March 30, 2015.

1.10 CONTRACTOR STAGING AND PARKING

A. The Contractor shall be permitted to stage his operations in the parking area as determined by the Owner

1.11 HAZARDOUS MATERIALS

A. If discovered during the course of construction, the Contractor shall immediately notify the Owner's Project Manager and Architect.

B. The removal of the asbestos containing materials is required to be conducted by a State of Maryland licensed asbestos abatement contractor prior to the replacement work.

C. Limited asbestos testing has been performed on the roofing materials. The contractor is responsible for complying with all local, state, and federal regulations related to the disturbance and/or removal of these materials. See attached report dated September 24, 2014.

1.12 CONTRACT DRAWINGS AND TECHNICAL SPECIFICATION

A. Any discrepancies discovered by the Bidder and/or Contractor shall be brought to the attention of the Owner and Architect in writing so that a response can be prepared.

1.13 COMMENCEMENT OF WORK AND SUBSTANTIAL COMPLETION

A. Commencement of Work is anticipated to begin within 30 days of P.O. issuance.

B. Substantial completion and all work shall be completed no later than December 31, 2020, with Final Completion no later than thirty (30) days after Substantial Completion.

1.14 TIME SCHEDULE AND LIQUIDATED DAMAGES

A. The Contractor shall perform work for this project and shall obtain final completion by January 2021.

B. Time is of the essence on this project and services must be returned to normal within the building within the specified time for Substantial Completion. Any unanticipated time issues must be addressed by the Contractor by working weekends or evenings in order to achieve Substantial Completion.

C. If work on the project is not completed within the specified construction period, liquidated damages will be accessed at the rate per calendar day of $250.00 as specified in the general conditions.

PART 2 PRODUCTS - Not Used

PART 3 EXECUTION - Not Used

END OF SECTION

Kline Associated Roofing Contractors Inc.

350 East First Street
Hagerstown, Maryland 21740

Phone: 301-791-2828
Fax: 301-791-5214

March 30, 2015

Bushey Feight Morin Architects
473 North Potomac Street
Hagerstown, MD 21740

Attn: Mike Gehr
Ref: Lincoln Elementary School-200 Madison Street, Frederick, MD

On March 24, 2015 we took (7) roof cores at the Lincoln Elementary School as shown on the enclosed roof drawing. There did not appear to be any wet cores at the time of the cuts.

Roof Core #1:

Type of Roof:	**Built Up Roof**
Insulation:	**1" ISO Insulation**
Insulation:	**1/2" Recovery Board**
Roof Deck:	**Metal**
Number of Roofs:	**1**

Roof Core #2:

Type of Roof:	**Built Up Roof**
Insulation:	**1" ISO Insulation**
Insulation:	**1/2" Recovery Board**
Roof Deck:	**Metal**
Number of Roofs:	**1**

Roof Core #3:

Type of Roof:	**Built Up Roof**
Insulation:	**1" ISO Insulation**
Insulation:	**1/2" Recovery Board**
Roof Deck:	**Metal**
Number of Roofs:	**1**

Roof Core #4:

Type of Roof:	**Built Up Roof**
Insulation:	**1" ISO Insulation**
Insulation:	**1/2" Recovery Board**
Roof Deck:	**Metal**

Kline Associated Roofing Contractors Inc.

350 East First Street
Hagerstown, Maryland 21740

Phone: 301-791-2828
Fax: 301-791-5214

Number of Roofs:	**1**

Roof Core #5:

Type of Roof:	**Built Up Roof**
Insulation:	**1" ISO Insulation**
Insulation:	**1/2" Recovery Board**
Roof Deck:	**Metal**
Number of Roofs:	**1**

Roof Core #6:

Type of Roof:	**Built Up Roof**
Insulation:	**1" ISO Insulation**
Insulation:	**1/2" Recovery Board**
Roof Deck:	**Metal**
Number of Roofs:	**1**

Roof Core #7:

Type of Roof:	**Built Up Roof**
Insulation:	**1" ISO Insulation**
Insulation:	**1/2" Recovery Board**
Roof Deck:	**Metal**
Number of Roofs:	**1**

There are photos enclosed of the roof cores. Thank you for the opportunity of submitting the above core report and we look forward to hearing from you. If you should have any questions, please contact us at (301) 791-2828.

Sincerely,

Barbara E. Kline

Barbara E. Kline, President
Kline Associated Roofing Contractors, Inc.

INSTALLERS OF ENGINEERED BUILT-UP ROOFING SYSTEMS
commercial residential industrial

Roof Core Photos

NOTES APPLY TO ALL ROOF PLANS & TO OTHER DRAWINGS AS NOTED

ROOFING DEMO NOTES --

A. REMOVE (E) ROOFING & MEMBRANE INSULATION DOWN TO (E) DECK.

B. INSPECT (E) DECK -- REPLACE ANY & ALL DAMAGED SECTIONS. PATCH & REPAIR AT UNUSED OPENINGS & NEW PENETRATIONS.

C. PROTECT ALL (E) EQUIPMENT & FINISHES TO REMAIN.

D. PROTECT ALL BUILDING ENTRANCES & PATHWAYS FOR CONSTRUCTION DEBRIS DURING WORK.

E. REMOVE ALL WASTE DAILY FROM SITE OR PLACE INTO OWNER APPROVED DUMPSTERS.

ROOFING NOTES --

A. CONTRACTOR SHALL VERIFY ALL CONDITIONS IN THE FIELD & NOTIFY ANY INACCURACIES ON AS-BUILTS.

B. ROOF ELEVATIONS - ALL ELEVATIONS ARE AS BENCHMARKED AND APPROXIMATE. VERIFY ACTUAL CONDITIONS IN THE FIELD.

C. PROJECT SHALL BE PHASED DUE TO BUILDING REMAIN OCCUPIED. CONTRACTOR SHALL COORDINATE W/ FCPS & SCHOOL ADMIN. TO SCHEDULE MANY FEATURES AFTER HOURS WORK.

D. PROTECT EXISTING INTERIOR FINISHES, PARTICULARLY WHERE EXISTING CEILINGS ARE EXPOSED ROOF DECK. PROTECT AREAS BELOW FOR DEMO SECTION.

E. IDENTIFY ANY HAZARDOUS MATERIALS DUE TO ROOF REPLACEMENT (INCLUDING FLASHING, PIPE INSULATION, CEILING TILES ETC.) AND FOR INDUSTRIAL HYGIENIST DURING INITIAL TO MONITOR & TEST FOR CLEARANCE.

F. ALL WORK RELATED TO THE ROOFING SYSTEMS SHALL BE PERFORMED BY THE APPLICATOR OR BY PARTIES ACCEPTABLE TO THE ROOFING MANUFACTURERS AND QUALIFIED TO INSTALL SYSTEMS WITH THE SPECIFIED WARRANTIES.

G. COORDINATE ROOFING WITH OTHER WORK, ESPECIALLY MECHANICAL, PLUMBING, AND ELECTRICAL.

H. LOCATIONS OF ROOFTOP EQUIPMENT SHOWN ARE APPROXIMATE. COORDINATE WITH ACTUAL FIELD CONDITIONS. VERIFY IN THE FIELD. PROVIDE ROOFING AS REQUIRED TO ACCOMMODATE THE EQUIPMENT INSTALLED.

I. BLOCKING - PROVIDE ALL NEW PRESSURE TREATED - 2x8 - IN BLOCKING, UNLESS NOTED OTHERWISE.

J. REMOVE EXISTING ROOF AND ALL ASSOCIATED FLASHING, BLOCKING, ETC., AND DISPOSE OF IN ACCORDANCE WITH ALL APPLICABLE REQUIREMENTS.

1. CONTRACTOR SHALL REMOVE ALL CONSTRUCTION DEBRIS AND CLEAN ASPHALT RELATED PRODUCTS (NEW OR EXISTING) FROM ALL ADJ. SURFACES PRIOR TO FINAL INSPECTION.

2. PROVIDE ADEQUATE PROTECTION OF ALL ROOF DECKS DURING EXPOSURE.

3. REPAIR ALL EXISTING ROOF TOP EXHAUST VENT EQUIPMENT & PAINT (DO NOT PAINT OVER EQUIPMENT LABELS).

4. TRIM ANY TREES THAT OVERHANG ROOF BY - OR BEYOND EDGE OF ROOF LINE.

5. PROVIDE STAINLESS STEEL FITTINGS AT ALL CONDENSERS.

LEGEND

- TAPERED INSULATION OF SLOPING STRUCTURE (SLOPE 1/4" PER FT. - TYP.) — DIRECTION OF MIN. ROOF SLOPES INDICATED BY SLOPING STRUCTURE AND/OR TAPERED INSULATION.
- DIRECTION OF SLOPE ON TAPERED INSULATION CRICKETS
- COMBINATION ROOF DRAIN & OVERFLOW DRAIN - 4" X 4" MIN. SUMP - SEE DETAIL 4/A4.2
- VENT THROUGH ROOF - SEE DETAIL 7/A4.2
- EXISTING ROOF PENETRATION TO REMAIN
- EXISTING ROOF PENETRATION TO BE REMOVED
- ANTENNA TO REMAIN - REMOVE ALL EXISTING NOT IN USE
- WALKWAY PADS - SEE DETAIL 3/A4.2
- APPROXIMATE TOTAL THICKNESS OF NEW ROOFING & TAPERED INSULATION LESS COVER BOARD - SEE ROOF SYSTEM DETAILS
- TAPERED INSULATION OR TRIM ON ROOF SLOPE INSULATION TO PROVIDE MIN. SLOPE TO DRAIN - MIN. 1/4" PER FOOT.

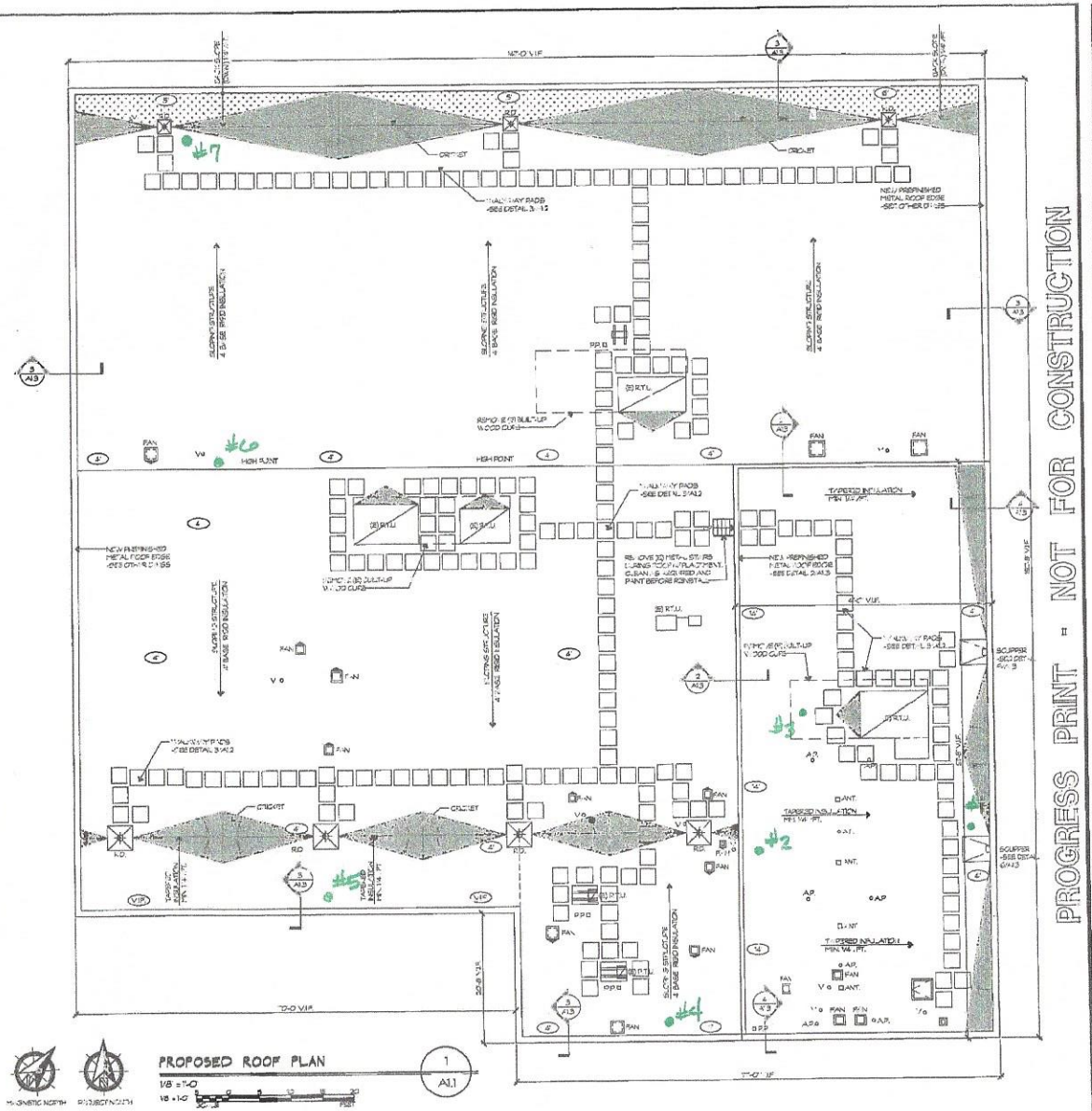

BFM

BUSHEY FEIGHT MORIN ARCHITECTS
473 NORTH POTOMAC STREET, HAGERSTOWN, MD 21740
BFMARCHITECTS.COM • 301-733-6600 • FAX 301-733-6512
©2014, BUSHEY FEIGHT MORIN ARCHITECTS, INC.

BFM# 14074

FCPS: LINCOLN ELEMENTARY
'A' ROOF REPLACEMENT

PROPOSED NEW ROOF PLAN

A1.1

2 OF 6 SHEETS

DATE: 10.17.14

Asbestos-Containing Roofing Materials Survey

Lincoln A Building, Roof Sections A & B
200 Madison Street
Frederick, Maryland 21701

Prepared for

Frederick County Public Schools
191 South East Street
Frederick, MD 21701

September 24, 2014

Prepared by

AERO EH&S, INC.
ENVIRONMENTAL HEALTH & SAFETY
10310-B BALTIMORE NATIONAL PIKE
ELLICOTT CITY, MD 21042
(410) 480-3636

AERO EH&S, INC.
ENVIRONMENTAL HEALTH & SAFETY
10310-B BALTIMORE NATIONAL PIKE
ELLICOTT CITY, MD 21042
OFFICE (410) 480-3636
FAX (410) 480-3637

June 24, 2014

Mr. Brian Staiger
Frederick County Public Schools
191 South East Street
Frederick, MD 21701

Re: Asbestos-Containing Roofing Materials Survey
Lincoln A Building, Roof Sections A & B
200 Madison Street
Frederick, Maryland 21701

Dear Mr. Staiger,

AERO EH&S, Inc. (AERO) is pleased to submit the attached asbestos roofing materials survey and testing report for the referenced site. The survey covered selected portions of the roof as specified by Frederick County Public Schools in preparation for a roofing replacement project. This report includes the procedures and methods for testing along with test results.

As a result of the survey, asbestos-containing materials that may be impacted by the roofing replacement project were identified.

AERO appreciates the opportunity to perform this project for Frederick County Public Schools. Please contact our office if you have any questions.

Sincerely,

AERO EH&S, Inc.

S. Michael Daldeyn
Senior Project Manager

AERO EH&S, INC.
ENVIRONMENTAL HEALTH & SAFETY

ASBESTOS ROOFING MATERIALS SURVEY
Lincoln A Building, Roof Sections A & B
200 Madison Street
Frederick, Maryland

Table of Contents

Asbestos-Containing Roofing Materials Survey 1
Purpose and Scope of Service 1
Laboratory Analysis 2
Conclusions and Recommendations 3

APPENDIX A Laboratory Results
APPENDIX B Sample Location Drawing
APPENDIX C Asbestos-Containing Materials Location Drawing

ASBESTOS ROOFING MATERIALS SURVEY
Lincoln A Building, Roof Sections A & B
200 Madison Street
Frederick, Maryland

Purpose and Scope of Service

The purpose of this project was to survey and test roofing materials on selected roof sections at the Lincoln A Building in Frederick, Maryland. The school is to undergo replacement of roof sections "A" & "B" as designated by FCPS. The survey and testing were performed in accordance with the following scope of work:

(1) Licensed asbestos inspectors conducted a survey of roofing and other materials suspected to contain asbestos that may be impacted by the replacement of roof sections designated by FCPS. The survey was conducted in accordance with generally accepted industry practices.

(2) AERO repaired roof sample cores using foam cores, webbing, and non-asbestos-containing roofing cement. Sample locations were spray-marked after repair.

(3) AERO surveyed the interior of the building under the affected roof sections and sampled accessible roof drain insulation, ceiling tiles, and any other suspect material that could be impacted by proposed roof drain work.

(4) AERO identified suspect asbestos-containing materials, both interior and exterior, that may be impacted by the roofing replacement project. This list of potentially affected suspect materials was compared with the list of previously identified ACM present in the school. Samples were collected of suspect materials that were not previously sampled.

(5) AERO collected bulk samples from each homogeneous material in accordance with generally accepted industry practices. At least one sample of each homogeneous roofing material is required. Since this survey was conducted for renovation purposes, the inspectors may have at their discretion collected more than one sample (core) of each material. Each of the replicate samples was analyzed unless a positive was identified.

(6) The samples were analyzed for asbestos fiber content at a laboratory accredited under the National Voluntary Laboratory Accreditation Program. The samples were analyzed using polarized light microscopy (PLM) using EPA Methods 600/M4-82-020 and/or 600/R-93/116.

(7) Based upon the analytical results and review of drawings and blueprints made available by FCPS, the approximate amounts, types, locations, and condition of asbestos-containing roofing were determined.

AERO has prepared this written report that includes the following:

- Survey methodology
- Analytical results and chain-of-custody documentation
- Types, conditions, locations, and approximate quantities of ACM
- Conclusions and recommendations

Laboratory Analysis

All bulk samples were analyzed by Scientific Analytical Institute (SAI) of Greensboro, NC using polarized light microscopy (PLM) in accordance with EPA Method 600/R-93/116. SAI participates in the National Voluntary Laboratory Accreditation Program, a quality assurance program for polarized light microscopy (#200664-0), and is accredited by the National Institute of Standards and Technology (NIST).

Six (6) bulk samples of suspect materials were analyzed, resulting in six analyses. One of the six analyses indicated the presence of asbestos. Additional information regarding this material is included in **Table 1** below. Any material that contains greater than one percent asbestos is considered asbestos-containing and must be handled according to OSHA, EPA, and applicable local regulations.

Table 1: Asbestos-Containing Materials

Sample No.	Material Description	Material Location	Asbestos Content	Condition	Friable (Y/N)	Approx. Quantity
091614-LES-02	Pitch Pocket	See Drawing	6% Chrysotile	Good	N	~15 SF

The bulk sample log and analysis report provided in **Appendix A** contain a listing of all analyzed samples, sample locations, and analytical results. Results are reported in percent asbestos by volume and indicate the type(s) of asbestos. Other common non-asbestos components may also be noted on the analytical report.

A drawing depicting sample locations is included in **Appendix B** of this report. A drawing depicting approximate asbestos-containing material locations is included in **Appendix C** of this report.

Conclusions and Recommendations

Based upon the work conducted for this survey and AERO's understanding of the project, AERO concludes and recommends the following:

(1) The pitch pockets were determined to be asbestos-containing. This material is classified as a Category I non-friable material by the EPA. This material was observed to be in good condition. The EPA regulates Category I non-friable materials (resilient floor coverings, asphalt roof products, gaskets, and packings) only when they are rendered friable. If activities associated with the proposed renovation would render these materials friable, AERO recommends that the materials be removed by a licensed asbestos abatement contractor prior to the renovation.

(2) No interior materials that would potentially be impacted by the roofing replacement project were found to contain asbestos. The insulation associated with the roof drains in this school were previously sampled and determined not to be asbestos-containing.

(3) The OSHA Construction Asbestos Standard requires building and/or facility owners to notify the following persons of the presence, location, and quantity of asbestos-containing material (ACM) or material presumed to be ACM at work sites in their buildings and facilities:

- Prospective employers applying or bidding for work whose employees reasonably can be expected to work in or adjacent to areas containing such material.
- Employees of the owner who will work in or adjacent to areas containing such material.
- On multi-employer worksites, all employers of employees who will be performing work within or adjacent to areas containing such materials.
- Tenants who will occupy areas containing such material.

In accordance with the OSHA Construction Asbestos Standard, AERO recommends that all contractors, tenants, custodial, and maintenance workers who may come in contact with ACM during the course of their normal duties be informed of the locations of ACM.

(4) Friable asbestos-containing materials including thermal system insulations and surfacing materials were banned in the United States during the 1970s. However, many of the non-friable materials (i.e., asbestos-cement products, mastics, resilient floor coverings) are allowed to contain bound asbestos fibers in their matrix. Therefore, AERO recommends that all future renovation designs include

specifications for non-asbestos building materials to avoid introducing ACM to the facility.

APPENDIX A

LABORATORY RESULTS

Bulk Asbestos Analysis

By Polarized Light Microscopy
EPA Method: 600/R-93/116 and 600/M4-82-020

AIHA-LAP, LLC ACCREDITED LABORATORY LAB #173190

NVLAP® NVLAP Lab Code: 200664-0

Customer: AERO EH&S Inc.
10310-B Baltimore National Pike
Ellicott City MD 21042

Attn: Bonnie Barrows

Lab Order ID: 1418288
Analysis ID: 1418288_PLM
Date Received: 9/19/2014
Date Reported: 9/22/2014

Project: FCPS 4 NCOCN "A" Frederick, MD

Sample ID / *Lab Sample ID*	Description / *Lab Notes*	Asbestos	Fibrous Components	Non-Fibrous Components	Attributes / Treatment
091614-CBS-01 / *1418288PLM_1*	Roof field, BUR	None Detected		100% Other	Black, Non Fibrous, Homogeneous / Dissolved
091614-CBS-02 / *1418288PLM_2*	Pitch pocket	6% Chrysotile		94% Other	Gray, Non Fibrous, Homogeneous / Dissolved
091614-CBS-03 / *1418288PLM_3*	Roof field, BUR	None Detected		100% Other	Black, Non Fibrous, Homogeneous / Dissolved
091614-CBS-04 / *1418288PLM_4*	Black mastic sealant on metal parapet cap	None Detected		100% Other	Black, Non Fibrous, Homogeneous / Dissolved
091614-CBS-05 / *1418288PLM_5*	Roof flashing	None Detected		100% Other	Black, Non Fibrous, Homogeneous / Dissolved
091614-CBS-06 / *1418288PLM_6*	Gray seam sealant	None Detected		100% Other	White, Non Fibrous, Homogeneous / Dissolved

Disclaimer: Due to the nature of the EPA 600 method, asbestos may not be detected in samples containing low levels of asbestos. We strongly recommended that analysis of floor tiles, vermiculite, and/or heterogeneous soil samples be conducted by TEM for confirmation of "None Detected" by PLM. This report relates only to the samples tested and may not be reproduced, except in full, without the written approval of SAI. This report may not be used by the client to claim product endorsement by NVLAP or any other agency of the U.S. government. Estimated MDL is 0.1%.

Christopher Subudhi (6)
Analyst

Approved Signatory

1418288

BULK ASBESTOS SAMPLE SHEET

AERO EH&S, INC.
ENVIRONMENTAL HEALTH & SAFETY
10310B BALTIMORE NATIONAL PIKE
ELLICOTT CITY, MD 21042
TEL: (410) 480-3636 FAX: (410) 480-3637

Requested Turnaround Time
Immed. 24hr (3 day) 5 day
Results Needed By:

Client/Job Number: FCPS
Project Name: LINCOLN "A"
Project Location: FREDERICK, MD

Inspectors: DERDEYN / ICEISTER
Date Sampled: 9/16/14

Room Name/Number	Floor	Material Type	Diameter / Size	Quantity	Cond	Friable? Y/N	Sample Description	Comments	Sample Number
ROOF B	R	~~RF~~ BUR	N/A		G	N	ROOF FIELD, BUR		09164-CES 01
ROOF B	R	MISC	~1 SF	~15 ea	G	N	PITCH POCKET		02
ROOF A	R	~~RF~~ BUR	N/A		G	N	ROOF FIELD, BUR		03
ROOF A	R	MISC	N/A		G	N	BLACK MASTIC SEALANT ON METAL PARAPET CAP		04
ROOF A&B	R	RF	N/A		G	N	ROOF FLASHING		05
ROOF A&B	R	MISC	N/A		G	N	GREY SEAM SEALANT		06

Accepted ☒
Rejected ☐

Chain of Custody

Sampled By: S. M. DERDEYN
Signature: [signature]
Date/Time: 9/16/14

Received By:
Signature:
Date/Time:

Transported By:
Signature:
Date/Time:

Lab Custody: SAI
Signature: [signature]
Date/Time: 9-19 @ 10A

APPENDIX B

SAMPLE LOCATION DRAWING

ACM SAMPLE LOCATION

91614-LES- ⟨##⟩

SAMPLE LOCATORS ARE REPRESENTED BY THE LAST 2 DIGITS OF SAMPLE NUMBER

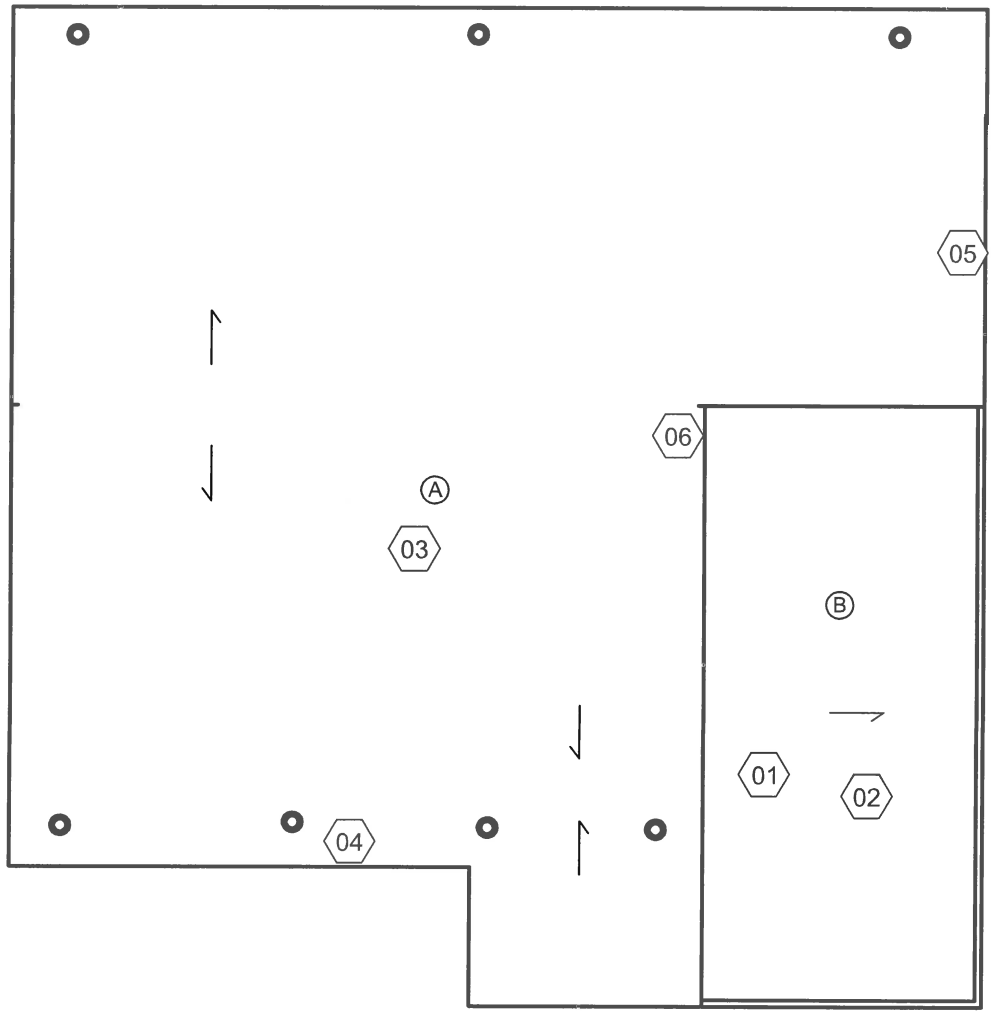

ACM SAMPLE LOCATIONS

LINCOLN "A" BUILDING

FREDERICK, MD

APPENDIX C

ASBESTOS-CONTAINING MATERIALS LOCATION DRAWING

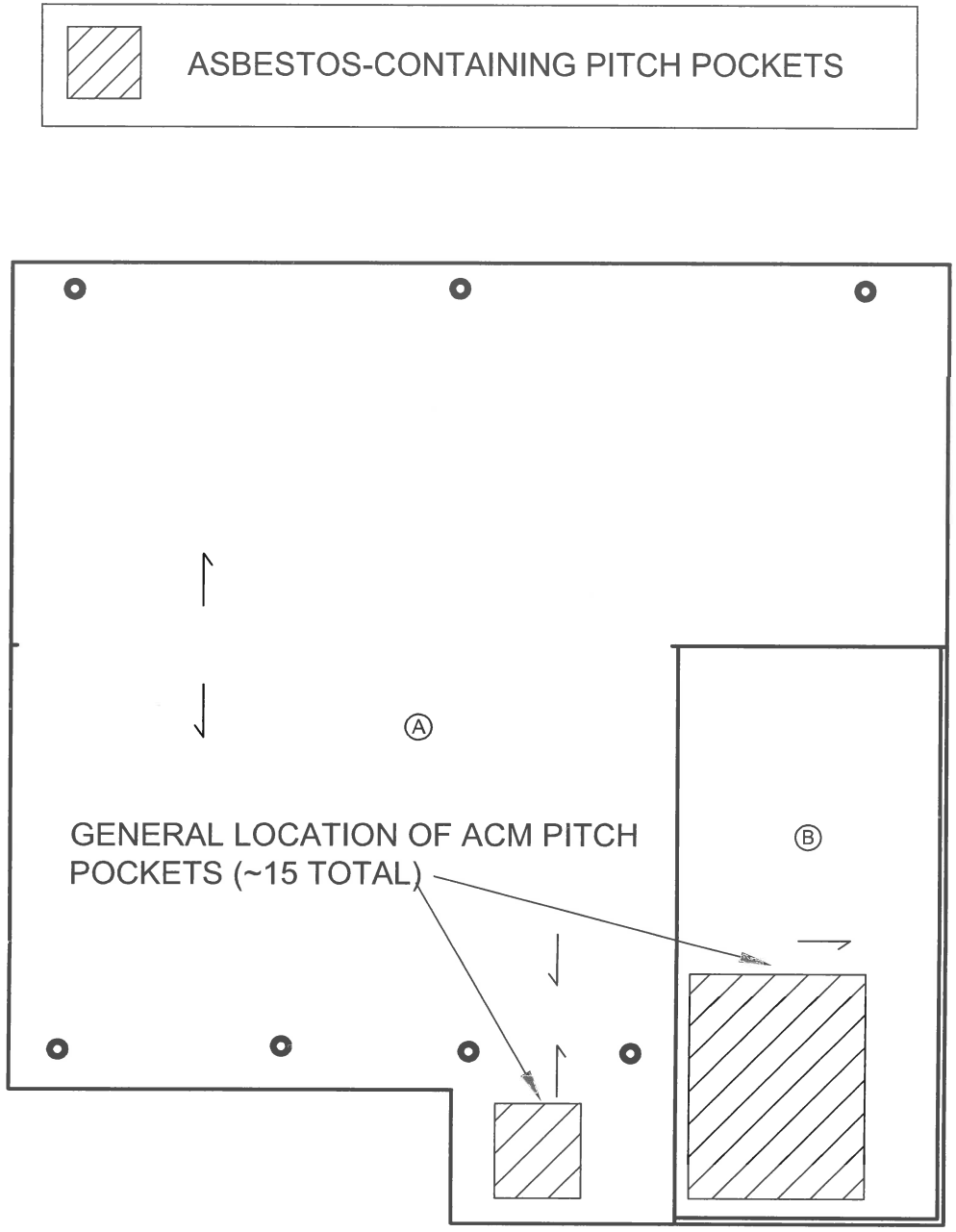

ASBESTOS-CONTAINING ROOFING MATERIAL LOCATIONS

LINCOLN "A" BUILDING
FREDERICK, MD

PART 1 GENERAL

1.01 SECTION INCLUDES

A. Schedule of Values.

1.02 RELATED SECTIONS

A. Section 00 20 00 - Standard Form of Proposal: Contract Sum/Price including alternates and unit prices.

B. Section 01 33 00 - Submittal Procedures: Schedule of Values.

C. Section 01 60 00 - Material and Equipment: Product substitutions.

1.03 SCHEDULE OF VALUES

A. Submit typed schedule on AIA Form G702 - Standard Monthly Contractor's Requisition for Payment. Contractor's electronic media printout will be considered.

B. Submit Schedule of Values electronically to Owner/Architect within 15 days after date established in Notice to Proceed.

C. Format: Utilize the Table of Contents of this Project Manual. Identify each line item with number and title of the major specification Section. Identify site mobilization, bonds and insurance.

D. Revise schedule to list approved Change Orders, with each Application for Payment.

PART 2 PRODUCTS

Not Used

PART 3 EXECUTION

Not Used

END OF SECTION

PART 1 GENERAL

1.01 SECTION INCLUDES

A. Procedures for preparation and submittal of Applications for Payment.

1.02 RELATED SECTIONS

A. Section 00 30 00 - Owner/Contractor Agreement: Contract Sum/Price and unit prices amounts of Progress Payments and Retainages time schedule for submittals.

B Section 00 31 00 - General Conditions: Progress Payments and Final Payment.

C. Section 01 01 90 - Contract Considerations: Schedule of Values

D. Section 01 02 80 - Change Order Procedures: Procedures for changes to the Work.

E. Section 01 33 00 - Submittal procedures.

F. Section 01 70 00 - Contract Closeout: Final Payment.

1.03 FORMAT

A. AIA. Form G702 and G703 - Standard Monthly Contractor's Requisition for Payment including continuation sheets when required.

B. For each item, provide a column for listing: Item Number; Description of work; Scheduled Value, Previous Applications: Work in Place and Site Stored Materials under this Application: Authorized Change Orders; Total Completed and Stored to Date of Application; Percentage of Completion; Balance to Finish; and Retainage.

C. Provide line items for Unit Prices for Allowances and a line item for Unit Prices including quantity in the Base Bid.

1.04 PREPARATION OF APPLICATIONS

A. Prepare applications for approval before formal submission, submit in pdf. format to Owner/Architect.

B. Present required information in typewritten form or on approved electronic media printout.

C. Execute certification by signature of authorized officer.

D. Use data from approved Schedule of Values. Provide dollar value in each column for each line item for portion of work performed and for site stored products.

E. List each authorized Change Order as an extension on continuation sheet, listing Change Order number and dollar amount as for an original item of Work.

F. Prepare Application for Final Payment as specified in Section 01 70 00.

1.05 SUBMITTAL PROCEDURES

A. Submit four (4) copies of each Application for Payment with original signatures to the Architect upon approval of pencil copy by FCPS Project Manager and Architect.

B. Submit an updated construction schedule with each Application for Payment.

C. Payment Period: Submit at intervals stipulated in the Agreement.

D. Submit under transmittal letter specified in Section 01 33 00.

E. Submit pencil copy of each application for review to Owner and Architect electronically via pdf. file.

1.06 SUBSTANTIATING DATA

A. When Architect/Engineer requires substantiating information, submit data justifying dollar amounts in question.

B. Provide one copy of data with cover letter for each copy of submittal. Show Application number and date, and line item by number and description.

PART 2 PRODUCTS

Not Used

PART 3 EXECUTION

Not Used

END OF SECTION

PART 1 GENERAL

1.01 SECTION INCLUDES

A. Submittals.

B. Documentation of change in Contract Sum/Price and Contract Time.

C. Change procedures.

D. Construction Change Authorization Directive.

E. Stipulated Sum change order.

F. Unit price change order.

G. Time and material change order.

H. Execution of change orders.

I. Correlation of Contractor submittals.

1.02 RELATED SECTIONS

A. Document - Owner/Contractor Agreement Forms: Monetary values of established Unit Prices and percentage allowances for Contractor's overhead and profit.

B. Section 00 31 00 - General Conditions: Governing requirements for changes in the Work, in Contract Sum/Price, and Contract Time.

C. Section 01 01 90 - Contract Considerations: Schedule of Values.

D. Section 01 02 70 - Applications for Payment: Payment applications.

E. Section 01 60 00 - Material and Equipment: Product options and substitutions.

F. Section 01 70 00 - Contract Closeout: Project Record Documents.

1.03 SUBMITTALS

A. Submit name of the individual authorized to receive change documents and be responsible for informing others in Contractor's employ or Subcontractors of changes to the Work.

B. Change Order Forms: AIA Form G702 and G703 - Change Order.

1.04 DOCUMENTATION OF CHANGE IN CONTRACT SUM/PRICE AND CONTRACT TIME

A. Maintain detailed records of work done on a time and material basis. Provide full information required for evaluation of proposed changes, and to substantiate costs of changes in the Work.

B. Document each quotation for a change in cost or time with sufficient data to allow evaluation of the quotation.

C. On request, provide additional data to support computations:
   1. Quantities of products, labor, and equipment.
   2. Taxes, insurance and bonds.
   3. Overhead and profit.
   4. Justification for any change in Contract Time.
   5. Credit for deletions from Contract, similarly documented.

D. Support each claim for additional costs, and for work done on a time and material basis, with additional information:
   1. Origin and date of claim.
   2. Dates and times work was performed, and by whom
   3. Time records and wage rates paid.
   4. Invoices and receipts for products, equipment, and subcontracts, similarly documented.

E. Submit proposed change order (PCO) electronically copy in pdf. format with all back-up data to Owner/Architect. No facsimile copies of the PCO will be permitted unless authorized by the Architect.

1.05 CHANGE PROCEDURES

A. The Architect/Engineer will advise of minor changes in the Work not involving an adjustment to Contract Sum/Price or Contract Time as authorized by AIA A201, 1997 Edition, paragraph 7.4, by issuing supplemental instructions on AIA Form G710.

B. The Architect/Engineer may issue a Proposal Request which includes a detailed description of a proposed change with supplementary or revised Drawings and specifications, a change in Contract Time for executing the change with a stipulation of any overtime work required and the period of time during which the requested price will be considered valid. Contractor will prepare and submit an estimate within seven (7) working days.

C. The Contractor may propose a change by submitting a request for change to the Architect/ Engineer, describing the proposed change and its full effect on the Work, with a statement describing the reason for the change, and the effect on the Contract Sum/Price and Contract Time with full documentation and a statement describing the effect on Work by separate or other contractors. Document any requested substitutions in accordance with Section 01600.

1.06 CONSTRUCTION CHANGE AUTHORIZATION

A. Architect/Engineer may issue a document, signed by the Owner, instructing the Contractor to proceed with a change in the Work, for subsequent inclusion in a Change Order.

B. The document will describe changes in the Work, and will designate method of determining any change in Contract Sum/Price or Contract Time.

C. Promptly execute the change in Work.

1.07 STIPULATED SUM CHANGE ORDER

A. Based on Proposal Request and Contractor's fixed price quotation or Contractor's request for a Change Order as approved by Architect/Engineer.

1.08 UNIT PRICE CHANGE ORDER

A. For predetermined unit prices and quantities, the Change Order will be executed on a fixed unit price basis.

B. For unit costs or quantities of units of work which are not predetermined, execute Work under a Construction Change Authorization.

C. Changes in Contract Sum/Price or Contract Time will be computed as specified for Time and Material Change Order.

1.09 TIME AND MATERIAL CHANGE ORDER

A. Submit itemized account and supporting data after completion of change, within time limits indicated in the Conditions of the Contract.

B. Architect/Engineer will determine the change allowable in Contract Sum/Price and Contract Time as provided in the Contract Documents.

C. Maintain detailed records of work done on Time and Material basis.

D. Provide full information required for evaluation of proposed changes, and to substantiate costs for changes in the Work.

1.10 EXECUTION OF CHANGE ORDERS

A. Execution of Change Orders: Architect/Engineer will issue Change Orders for signatures of parties as provided in the Conditions of the Contract.

1.11 CORRELATION OF CONTRACTOR SUBMITTALS

A. Promptly revise Schedule of Values and Application for Payment forms to record each authorized Change Order as a separate line item and adjust the Contract Sum/Price.

B. Promptly revise progress schedules to reflect any change in Contract Time, revise sub-schedules to adjust time for other items of work affected by the change, and resubmit.

C. Promptly enter changes in Project Record Documents.

END OF SECTION

PART 1 GENERAL

1.01 SECTION INCLUDES

A. Coordination.

B. Pre-construction conference.

C. Site mobilization conference.

D. Progress meetings.

E. Pre-installation conferences.

1.02 RELATED SECTIONS

A. Section 01 04 10 - Project Coordination.

B. Section 01 04 50 - Cutting and Patching.

1.03 COORDINATION

A. Coordinate scheduling, submittals, and Work of the various Sections of specifications to assure efficient and orderly sequence of installation of interdependent construction elements, with provisions for accommodating items installed later.

B. Verify that utility requirement characteristics of operating equipment are compatible with building utilities. Coordinate work of various Sections having interdependent responsibilities for installing, connecting to, and placing in service, such equipment.

C. Coordinate space requirements and installation of mechanical and electrical work which are indicated diagrammatically on Drawings. Follow routing shown for pipes, ducts, and conduit, as closely as practicable; place runs parallel with line of building. Utilize spaces efficiently to maximize accessibility for other installations, for maintenance, and for repairs.

D. In finished areas except as otherwise indicated, conceal pipes, ducts, and wiring within the construction. Coordinate locations of fixtures and outlets with finish elements.

E. Coordinate completion and clean up of Work of separate Sections in preparation for Substantial Completion and for portions of Work designated for Owners partial occupancy.

F. After Owner occupancy of premises, coordinate access to site for correction of defective Work and Work not in accordance with Contract Documents, to minimize disruption of Owner's activities.

1.04 CUTTING AND PATCHING

A. Refer to Section 01 04 50.

B. Maintain integrity of wall, ceiling, or floor construction; completely seal voids.

C. Identify any hazardous substance or condition exposed during the Work to the Architect/ Engineer for decision or remedy.

1.05 PRE-CONSTRUCTION CONFERENCE

A. Architect/Engineer will schedule a conference after Notice of Award.

B. Attendance Required: Owner, Architect/Engineer, Contractor, and Roof Manufacturer's Inspector.

C. Agenda:
1. Execution of Owner-Contractor Agreement.
2. Submission of executed bonds and insurance certificates.
3. Distribution of Contract Documents.
4. Submission of list of Subcontractors, list of products, Schedule of Values, and progress schedule.
5. Designation of personnel representing the parties in Contract, and in field, and the Architect/Engineer.
6. Procedures and processing of field decisions, submittals, substitutions, applications for payments, proposal request, Change Orders and Contract closeout procedures.
7. Scheduling.

1.06 SITE MOBILIZATION CONFERENCE

A. Architect/Engineer will schedule a conference at the Project site prior to Contractor occupancy.

B. Attendance Required: Owner, Architect/Engineer, and Contractor, Contractor's Superintendent, and major Subcontractors.

C. Agenda:
1. Use of premises by Owner and Contractor.
2. Owner's requirements and partial occupancy.
3. Construction facilities and controls provided by Owner.
4. Temporary utilities provided by Owner.
5. Survey and building layout.
6. Security and housekeeping procedures.
7. Schedules.
8. Procedures for testing.
9. Procedures for maintaining record documents.
10. Requirements for start-up of equipment.
11. Inspection and acceptance of equipment put into service during construction period.

1.07 PROGRESS MEETINGS

A. Schedule and administer meetings throughout progress of the Work at maximum twice monthly intervals.

B. Make arrangements for meetings, prepare agenda with copies for participants, and preside at meetings.
1. Architect will record minutes and distribute within seven (7) working days after the progress meeting to the Owner, Consultants, and General Contractor.

C. Attendance Required: Job superintendent, major Subcontractors and suppliers, Owner, Architect/Engineer, as appropriate to agenda topics for each meeting.

D. Agenda:
1. Review minutes of previous meetings.
2. Review of Work progress.
3. Field observations, problems, and decisions.
4. Identification of problems which impede planned progress.
5. Review of submittals schedule and status of submittals.
6. Review of off-site fabrication and delivery schedules.
7. Maintenance of progress schedule.
8. Corrective measures to regain projected schedules.
9. Planned progress during succeeding work period.
10. Coordination of projected progress.
11. Maintenance of quality and work standards.
12. Effect of proposed changes on progress schedule and coordination.

13. Other business relating to Work.

1.08 PRE-INSTALLATION CONFERENCES

A. When required in individual specification Section, convene a pre-installation conference at work site prior to commencing work of the Section.

B. Require attendance of parties directly affecting, or affected by, work of the specific Section.

C. Notify Architect/Engineer seven (7) days in advance of meeting date.

D. Prepare agenda, preside at conference, record minutes, and distribute copies within seven (7) working days after conference to participants, with two (2) copies to Architect/Engineer and two (2) copies to the Owner.

E. Review conditions of installation, preparation and installation procedures, and coordination with related work.

PART 2 PRODUCTS

Not Used

PART 3 EXECUTION

Not Used

END OF SECTION

PART 1 GENERAL

1.01 SECTION INCLUDES

A. Project coordination administrator.

B. Extra Work

C. Unauthorized work

D. Restoration and Clean-up

E. Construction mobilization.

F. Schedules.

G. Submittals.

H. Coordination drawings.

I. Closeout procedures.

1.02 RELATED SECTIONS

A. Section 01 03 90 - Coordination and Meetings: Project meetings, Preconstruction conferences, Progress meetings.

B. Section 01 20 50 – Procedures and Controls

C. Section 01 70 00 - Contract Closeout: Contract closeout procedures.

1.03 PROJECT COORDINATION ADMINISTRATOR

A. Project Coordination Administrator: Owner.

1.04 EXTRA WORK

A. Change orders will not be approved for any reason other than items that were totally unforeseen. Any unforeseen items should be immediately brought to the attention of the project superintendent. No extra work can be performed unless authorized by Owner.

1.05 UNAUTHORIZED WORK

A. Work performed which is not provided for in the Contract, and Work done beyond limits shown on the Plans or as directed, or Extra Work done without written authorization will be considered unauthorized, shall be at the expense of the roofing contractor, and will not be measured or paid for by the Owner. Work so done maybe ordered, removed, and replaced at the roofing contractor's expense.

1.06 RESTORATION AND CLEAN-UP

A. During the construction period, the Contractor shall, on a daily basis, place all of his waste materials and "non-broomable" debris into containers.

B. Provide magnetic sweep to the ground area adjacent to the building and on all parking lot and asphalt areas including walkways and all areas where roofing activities occurred from ground including but not limited too the access path to get to the building / work area. Provide magnetic sweep of the roof area as well.

C. Upon completion of the Work and before acceptance and final payment is made, the Work shall be cleaned of all rubbish, excess materials, false work, temporary structures, and equipment; and all parts of the Work shall be left in a neat, presentable condition, satisfactory to the Owner. This Work shall be considered incidental to the overall project and no additional compensation will be allowed.

1.07 CONSTRUCTION MOBILIZATION

A. Cooperate with the Administrator in allocation of mobilization areas of site; for field offices and sheds, for access, traffic, and parking facilities.

B. During construction, coordinate use of site and facilities through the Administrator.

C. Comply with Administrator's procedures for intra-project communications; submittals, reports and records, schedules, coordination drawings, and recommendations; and resolution of ambiguities and conflicts.

D. Comply with instructions of the Administrator for use of temporary utilities and construction facilities.

E. Coordinate filed engineering and layout work under instructions of the Administrator.

1.08 SCHEDULES

A. Submit progress schedule in bar chart format with a roof plan marked with areas of work on a daily basis. Submit in pdf. format.

B. After review, revise and resubmit schedule to comply with revised Project schedule.

C. During progress of Work, revise and resubmit with Applications for Payment.

D. Provide updated roof plan with a day to day work schedule indicated for the next 14 days at each progress meeting. Also show what work has been completed.

1.09 SUBMITTALS

A. Submit preliminary shop drawings, product data and samples in accordance with Section 01 33 00 for review and compliance with Contract Documents, for field dimensions and clearances, for relation to available space, and for relation to work of separate contracts. Revise and resubmit as required.

B. Submit Applications for Payment on AIA Form G702 and G703 for review, and for transmittal to Architect/Engineer.

C. Submit requests for interpretation of Contract Documents, and obtain instructions through Architect/Engineer.

D. Process requests for substitutions, and change orders, through Administrator.

E. Deliver closeout submittals for review and preliminary inspection reports, for transmittal to Architect/Engineer.

1.10 COORDINATION DRAWINGS

A. Provide information required by Administrator for preparation of coordination drawings.

B. Review drawings prior to submission to Architect/Engineer.

1.11 CLOSEOUT PROCEDURES

A. Notify Administrator when Work is considered ready for Substantial Completion. Accompany Administrator on preliminary inspection to determine items to be listed for completion or correction in Contractor's notice of Substantial Completion.

B. Comply with Administrator's instructions to correct items of Work listed in executed Certificates of Substantial Completion and for access to Owner occupied areas.

C. Notify Administrator when Work is considered finally complete.

D. Comply with Administrator's instructions for completion of items of Work determined by the Architect/Engineer's final inspection.

PART 2 PRODUCTS

Not Used

PART 3 EXECUTION

Not Used

END OF SECTION

PART 1 GENERAL

1.01 SECTION INCLUDES

A. Requirements and limitations for cutting and patching of Work.

1.02 RELATED SECTIONS

A. Section 01 01 00 - Summary of Work: Work by Owner or by separate contractors.

B. Section 01 72 30 - Selective Demolition.

C. Section 02 22 50 - Demolition.

D. Individual Product Specification Sections:
1. Cutting and patching incidental to work of the Section.
2. Advance notification to other Sections of openings required in work of those Sections.
3. Limitations on cutting structural members.
4. Each specification section of the Work shall be responsible for their own cutting and patching as it relates to their work.

1.03 SUBMITTALS

A. Submit written request in advance of cutting or alteration which affects:
1. Structural integrity of any element of Project.
2. Integrity of weather-exposed or moisture-resistant element.
3. Efficiency, maintenance, or safety of any operational element.
4. Visual qualities of sight exposed elements.
5. Work of Owner or separate contractor.

B. Include in request:
1. Identification of Project.
2. Location and description of affected work.
3. Necessity for cutting or alteration.
4. Description of proposed work, and products to be used.
5. Alternatives to cutting and patching.
6. Effect on work of Owner or separate contractor.
7. Written permission of affected separate contractor.
8. Date and time work will be executed.

PART 2 PRODUCTS

2.01 MATERIALS

A. Primary Products: Those required for original installation.

B. Product Substitution: For any proposed change in materials, submit request for substitution under provisions of Section 01 60 00.

PART 3 EXECUTION

3.01 EXAMINATION

A. Inspect existing conditions prior to commencing Work, including elements subject to damage or movement during cutting and patching.

B. After uncovering existing work, inspect conditions affecting performance of work.

C. Beginning of cutting or patching means acceptance of existing conditions.

3.02 PREPARATION

A. Provide temporary supports to ensure structural integrity of the Work. Provide devices and methods to protect other portions of Project from damage.

B. Provide protection from elements for areas which may be exposed by uncovering work.

C. Maintain construction free of water.

D. Identify any hazardous substance or condition exposed during work to the Architect/Engineer for decision or remedy.

3.03 CUTTING AND PATCHING

A. Execute cutting, fitting, and patching including excavation and fill to complete work.

B. Fit products together, to integrate with other work.

C. Uncover work to install ill-timed work.

D. Remove and replace defective or non-conforming work.

E. Remove samples of installed work for testing when requested.

F. Provide openings in the work for penetration of mechanical and electrical work.

G. Maintain integrity of wall, ceiling or floor construction; completely seal voids.

3.04 PERFORMANCE

A. Execute work by methods to avoid damage to other Work, and which will provide appropriate surfaces to receive patching and finishing.

B. Employ original installer to perform cutting and patching for weather exposed and moisture resistant elements, and sight-exposed surfaces.

C. Cut rigid materials using masonry saw or core drill. Pneumatic tools not allowed without prior approval.

D. Restore work with new products in accordance with requirements of Contract Documents.

E. Fit work air tight to pipes, sleeves, ducts, conduit, and other penetrations through surfaces.

F. At penetrations of fire rated walls, partitions, ceiling, or floor construction, completely seal voids with fire rated material to full thickness of the penetrated element.

G. Refinish surfaces to match adjacent finish. For continuous surfaces, refinish to nearest intersection or natural break. For an assembly, refinish entire unit.

END OF SECTION

PART 1 GENERAL

1.01 SECTION INCLUDES

A. Schedule of values.

B. Applications for payment.

C. Change procedures.

D. Defect assessment.

E. Alternates.

F. Unit Prices.

1.02 SCHEDULE OF VALUES

A. Submit printed schedule on IAC/PSCP Form 306.4 Standard Monthly Contractor's Requisition for Payment and AIA Form G702 - Application and Certifications for Payment with AIA Form G703 - Continuation Sheet.

B. Submit one (1) copies of the Schedule of Values electronically in .pdf format in smallest file size possible within fifteen (15) days after date established in Notice to Proceed.

C. Format: Utilize Table of Contents of this Project Manual. Identify each line item with number and title of major specification Section. Identify bonds as a separate cost.

D. Include, as separate line items, the amount of Allowances included in the Contract and for additional quantities. For unit cost Allowances, identify quantities taken from Contract Documents multiplied by unit cost to achieve total for each item.

E. Revise schedule to list approved Change Orders, with each Application for Payment.

1.03 APPLICATIONS FOR PAYMENT

A. Submit four (4) original copies of each application on AIA G702 with continuation sheet with original signatures to the Architect.

B. Content and Format: Utilize Schedule of Values for listing items in Application for Payment.

C. Payment Period: Submit at intervals stipulated in the Agreement.

D. Substantiating Data: When Architect/Engineer requires substantiating information, submit data justifying dollar amounts in question.

E. Submit Pencil copy electronically in pdf format for review by Owner/Architect before submission of format application.

1.04 CHANGE PROCEDURES

A. Submittals: Submit name of individual authorized to receive change documents, and be responsible for informing others in Contractor's employ or Subcontractors of changes to the Work.

B. The Architect/Engineer will advise of minor changes in the Work by either responding to the Contractor's Request for Information (RFI) or by the issuance of an Architectural Supplemental Instructions (ASI) on AIA Form G710.

C. The Architect/Engineer may issue a Request for Proposal (RFP) including a detailed description of proposed change with supplementary or revised Drawings and specifications. Contractor will prepare and submit estimate within fifteen calendar (15) days.

D. Contractor may propose changes by submitting a Change Order Request (COR) to Owner/Architect describing proposed change and its full effect on the Work. Include a statement describing reason for the change, and effect on Contract Sum/Price and Contract Time with full documentation and a statement describing effect on Work by separate or other Contractors. Document requested substitutions in accordance with Section 01 60 00.

E. Stipulated Sum/Price Change Order: Based on Proposal Request and Contractor's fixed price quotation or Contractor's request for Change Order as approved by Architect/ Engineer.

F. Unit Price Change Order: For contract unit prices and quantities, the Change Order will be executed on fixed unit price basis. For unit costs or quantities of units of work which are not pre-determined, execute Work under Field Directive. Changes in Contract Sum/Price or Contract Time will be computed as specified for Time and Material Change Order.

G. Field Directive: Architect/Engineer may issue directive, signed by Owner, instructing Contractor to proceed with change in the Work, for subsequent inclusion in a Change Order. Document will describe changes in the Work, and designate method of determining any change in Contract Sum/Price or Contract Time. Promptly execute change.

H. Time and Material Change Order: Submit itemized account and supporting data after completion of change, within time limits indicated in Conditions of the Contract. Architect/Engineer will determine change allowable in Contract Sum/Price and Contract Time as provided in Contract Documents.

I. Maintain detailed records of work done on Time and Material basis. Provide full information required for evaluation of proposed changes, and to substantiate costs for changes in the Work.

J. Document each quotation for change in cost or time with sufficient data to allow evaluation of quotation.

K. Change Order Forms: Change Order Request Proposal attached at the end of this section.

L. Execution of Change Orders: The Architect will issue Change Orders for signatures of parties as provided in Conditions of the Contract.

M. Correlation of Contractor Submittals:
   1. Promptly revise Schedule of Values and Application for Payment forms to record each authorized Change Order as separate line item and adjust Contract Sum/Price.
   2. Promptly enter changes in Project Record Documents.

1.05 DEFECT ASSESSMENT

A. Replace the Work, or portions of the Work, not conforming to specified requirements.

B. If, in the opinion of the Owner/Architect/Engineer, it is not practical to remove and replace the Work, the Owner/Architect/Engineer will direct appropriate remedy or adjust payment.

C. The defective * Work may remain, but unit sum/price will be adjusted to new sum/price at discretion of Owner/Architect/Engineer. (*At the Owner’s Option)

D. Defective * Work will be partially repaired to instructions of Architect/Engineer, and unit sum/price will be adjusted to new sum/price at discretion of Owner/Architect/Engineer. (*At the Owner’s Option)

E. Individual specification sections may modify these options or may identify specific formula or percentage sum/price reduction.

F. Authority of Owner/Architect/Engineer to assess defects and identify payment adjustments is final.

G. Non-Payment For Rejected Products: Payment will not be made for rejected products for any of the following:

1. Products wasted or disposed of in a manner that is not acceptable.
2. Products determined as unacceptable before or after placement.
3. Products not completely unloaded from transporting vehicle.
4. Products placed beyond lines and levels of required Work.
5. Products remaining on hand after completion of the Work.
6. Loading, hauling, and disposing of rejected products.

1.06 ALTERNATES (N/A)

A. Alternates quoted on the Bid Form will be reviewed and accepted or rejected at the Owner's option. Accepted alternates will be identified in the Owner-Contractor Agreement.

B. Bids will be evaluated on Base Bid Price and any of the alternates that the Owner chooses based on the available funds.

C. Cost as indicated shall include all material, labor, equipment and all other costs need to perform the work and install in accordance to the drawings, specifications and manufacturer's instructions.

D. Coordinate related work and modify surrounding work as applicable.
   1. Schedule of Alternates: None

1.07 UNIT PRICES

A. The following unit prices shall be identified in the Form of Proposal and shall be included within the Base Bid that they are associated.

B. Unit prices are required on the following items to provide for the addition or deletion of work if the Architect's estimated quantities vary more than 10 percent (±) from the actual work required. Unit prices shall include all supervision, labor, equipment, materials, markup, overhead and profit as required. These prices are based on performance during the period of the contract. Unused quantities shall be credited from the contract at the end of the project per the unit price cost.

C. The purpose of these Unit Prices is for corrective work that has not been included within the Contract Documents unless otherwise noted.

D. Prior to utilizing materials from the unit price quantities, the Owner and Architect shall provide prior approval.

E. Unit Price Schedule:
   1. Refer to Section 01 01 00.

PART 2 PRODUCTS

Not Used.

PART 3 EXECUTION

Not Used.

END OF SECTION

FREDERICK COUNTY PUBLIC SCHOOLS
LINCOLN 'A' FACILITY
ROOF REPLACEMENT
FCPS BID NO. _____

CHANGE ORDER REQUEST PROPOSAL

Project Name:_____ Date:_____

Contractor Proposal Number:_____

Contractor:_____

Subcontractor:_____

Sub-Subcontractor:_____

C.O.R. Item or Work:_____

I. Direct Payroll Less Fringes, Insurance, Taxes*:_____

II. Fringes, Tax, Insurance Burden of Payroll:_____

III. Total Materials Costs**:_____

IV. Material Sales Tax:_____

V. Equipment Rentals (Attach Copy of Invoice):_____

VI. Contractor-Owned Equipment**:_____

VII. Total All Lines: _____

VIII. Subcontractors Costs (Attach Breakdown):_____

IX. Profit and Overhead on Subcontractors:_____

X. Total Lines VII, VIII and IX:_____

* Provide Itemization of Labor Hours and Worker Classification
** Provide Itemization.

Change Order Request Form is Required for Each Portion of Change Order Request Submission

END OF SECTION

PART 1 GENERAL

1.01 DESCRIPTION OF WORK:

A. The types of minimum requirements for procedures and performance or control work of a general nature include but are not necessarily limited to the following categories:
   1. Surveys and layout.
   2. Trades people and workmanship standards.
   3. General installation provisions.
   4. Cleaning and protection.

1.02 RELATED DOCUMENTS:

A. Drawings and general provisions of Contract, including General and Supplementary Conditions and other Division-1 Specification sections, apply to work of this section.

1.03 SURVEYS AND LAYOUT:

A. General: The Contractor shall be solely responsible for properly laying out the work and for all lines and measurements for all of the work executed under the Contract Documents. The Owner nor his representative will in any case assume the responsibility for laying out the work.

B. All dimensions and grades shown on Drawings are believed to be correct, but the Contractor shall verify them at the site and notify the Architect in writing of any discrepancies found before proceeding with the work; similarly as to final lines and grades established by official surveys, the Contractor shall check the Drawings against such established lines and grades and notify the Architect in writing of any discrepancies found. In the absence of such notifications, extra work caused by discrepancies shall not entitle the Contractor to additional compensation.

C. Working from lines and levels established by property survey, and as shown in relation to the work, establish and maintain two bench marks near the building and other dependable markers to set lines and levels for the work at each story of construction and elsewhere on site as needed to properly locate each element of entire project. Calculate and measure required dimensions as shown (within recognized tolerances if not otherwise indicated); do not scale drawings to determine dimensions. The Contractor shall be solely responsible for the proper location and level of all the work and for the maintenance of the reference lines and bench marks.

1.04 TRADES PERSONS AND WORKMANSHIP STANDARDS:

A. General: Instigate and maintain procedures to ensure that persons performing work at site are skilled and knowledgeable in methods and craftsmanship needed to produce required quality-levels for workmanship in completed work. Remove and replace work which does not comply with workmanship standards as specified and as recognized in the construction industry for applications indicated. Remove and replace other work damaged or deteriorated by faulty workmanship or its replacement.

1.05 GENERAL INSTALLATION PROVISIONS:

A. Installer's Inspection of Conditions: Require Installer of each major unit of work to inspect substrate to receive work, and conditions under which work will be performed, and to report, in writing to Contractor, unsatisfactory conditions. Do not proceed with the work until unsatisfactory conditions have been corrected in a manner acceptable to Installer.

B. Manufacturer's Instructions: Where installations include manufactured products, comply with manufacturer's applicable instructions and recommendations for installation, to

extent these are more explicit or more stringent than requirements indicated in Contract Documents.

C. Inspect each item of materials or equipment immediately prior to installation and reject damaged and defective items.

D. Provide attachment and connection devices and methods for securing work properly as it is installed; true to line and level, and within recognized industry tolerances if not otherwise indicted. Allow for expansions and building movements. Provide uniform joint widths in exposed work, organized for best possible visual effect. Refer questionable visual-effect choices to the Architect for final decision.

E. Recheck measurements and dimensions of the work, as an integral step of starting each installation.

F. Install work during conditions of temperature, humidity, exposure, forecasted weather, and status of project completion which will ensure best possible results for each unit of work, in coordination with entire work. Isolate each unit of work from non-compatible work, as required to prevent deterioration.

G. Concealed Work: Coordinate enclosure of work, including backfilling, placing concrete or other work which will conceal mechanical and electrical lines, reinforcing and other items with the Architect and with required inspections and tests, so as to minimize necessity of uncovering work for that purpose. Record exact locations of mechanical, electrical and site utility work on Record Drawings.

H. Mounting Heights: Where mounting heights are not indicated, mount individual units of work at industry-recognized standard mounting heights, or at heights specified by applicable codes, for applications indicated. Refer questionable mounting height choices to the Architect for final decision.

1.06 COORDINATION - MECHANICAL AND ELECTRICAL:

A. Enclose and conceal from view wiring, conduit, ducts, heat piping, sprinkler piping, water piping and other utility lines in habitable rooms and spaces, unless otherwise shown or specified. Do not leave wiring, conduits, pipes, etc., exposed in a habitable space so as to interfere with occupancy of that room.
   1. Where not otherwise shown or approved, use adjacent masonry, lath and plaster, gypsum board or other finish construction to form the enclosing chase or furring.
   2. Enclose all such utilities with furring, chases or other enclosures as required, whether or not an enclosure is specifically shown.

B. Locate sprinkler heads, ceiling diffusers, lighting fixtures, grilles, speakers and other similar items occurring in exposed grid suspended ceiling systems centered in lay-in panels in both directions or to fill a full ceiling grid module.

C. Coordination: Do not fabricate or install ductwork, electric conduit, pull boxes, piping and other mechanical items above suspended ceilings until the Contractor has verified that there will be no interference between trades and that the design requirements shown and specified for room construction, equipment, fixtures and finishes can be maintained. Prior to installation, promptly report to the Architect apparent interference or difficulties anticipated.

1.07 SITE CONDITIONS

A. Field Measurements and Material Quantities:
   1. Contractor shall have SOLE responsibility for accuracy of all measurements, estimates of material quantities and sizes, and site conditions that will affect work including but not limited too: Field measurements and material quantities.

B. Existing Conditions:

1. Building space directly under roof area covered by this specification will be utilized by on-going operations.
2. Access to roof shall be as outlined in pre-construction meeting.
3. Move air-conditioning condensing units and other equipment as required to install roofing materials complete and in accordance with plans and specifications. When units and equipment are to be moved, they shall be carefully disconnected and removed to a protected area so as not to damage any part or component thereof. Reconnect units in such a way that they are restored to a prior work operating condition. Guard against dust, dirt and odors from entering the building during HVAC equipment relocation by field fabricating temporary covers and/or seals.
4. A mechanical and/or electrical company licensed to perform such work shall perform all disconnection and re-connection. Subcontractor shall include in his price, cost for adjustments to roof drains to appropriate elevations to conform to new roof specifications. Work including new drain installation shall be performed by licensed plumbing company as pre-qualified in Frederick County.
5. All work shall be the responsibility of the roofing contractor unless otherwise noted. All work shall be considered that of what is necessary to complete the Scope of Work as written above.
6. Existing roof top equipment shall NOT be set upon, used as a work bench or shelf to storage materials. Clean asphalt and adhesives from units upon completion of work.

C. Environmental Requirements:
1. Do not work in rain, snow, or in presence of water.
2. Do not work in temperatures below 40 degrees F.
3. Do not install materials marked "KEEP FROM FREEZING" when daily temperatures are scheduled to fall below 40 degrees F.
4. Do not perform masonry work below 40 degrees F.
5. Remove any work exposed to freezing.
6. The roofing contractor will use some or all of the following methods to minimize disruptions to building occupants and operations due to odor and will be performed at no additional cost to the Owner.
   a. Divert air intake from work area by attaching scoops or temporary ductwork.
   b. Temporarily shut down or block air intakes.
   c. Install temporary charcoal filters.
   d. Add odor reducing additive to asphalt tanker if hot asphalt is used.

D. Security Requirements:
1. Comply with Owner security requirements.
2. Provide Owner with current list of accredited persons.

1.08 CLEANING AND PROTECTION:

A. General: During handling and installation of work at project site, clean and protect work in progress and adjoining work on a basis of perpetual maintenance. Apply suitable protective covering on newly installed work where reasonably required to ensure freedom from damage or deterioration at time of substantial completion; otherwise, clean and perform maintenance on newly installed work as frequently as necessary through remainder of construction period. Adjust and lubricate operable components to ensure operability without damaging effects.

B. Limiting Exposure of Work: To extent possible through reasonable control and protection methods, supervise performance of work in a manner and by means which will ensure that none of the work, whether completed or in progress, will be subjected to harmful, dangerous, damaging, or otherwise deleterious exposures during construction period. Such exposures include where applicable (but not by way of limitation) static loading, dynamic loading, internal pressures, external pressures, high or low

temperatures, thermal shock, high or low humidity, air contamination or pollution, water, ice, solvents, chemicals, light, radiation, puncture, abrasion, heavy traffic, soiling, bacteria, insect infestation, combustion, electrical current, high speed operation, improper lubrication, unusual wear, misuse, incompatible interface, destructive testing, misalignment, excessive weathering, unprotected storage, improper shipping/handling, theft and vandalism.

1.09 FIRE SAFETY REQUIREMENTS:

A. General: The following "Fire Safety Requirements" applies as it relates to construction of school facilities and is an integral part of this Section.

B. FIRE SAFETY REQUIREMENTS FOR PARTIAL OCCUPANCY OF SCHOOL FACILITIES UNDER CONSTRUCTION

1. School Construction: The following requirements are considered to be minimal requirements necessary to the safety of student occupants of school facilities. It shall be the general requirement that all new school facilities be fully completed prior to student occupancy. It is recognized, however, in unusual circumstances it may become necessary to provide for partial occupancy of an educational facility. In these circumstances the following fire safety requirements shall be met prior to student occupancy:

a. All required fire protection equipment and built-in fire safety devices shall be installed, tested by fire officials and approved prior to student occupancy of the facility. Include in this requirement, among others, are the following:

1) Automatic sprinkler protection.
2) Complete fire alarm installation including the correct installation of the annunciator panel.
3) Exit lighting.
4) Emergency white lighting.
5) All required fire doors.
6) All-weather road access to the building.
7) Installation of fire extinguishers.

b. Required student egress facilities, including corridors, exit ways and walkways, leading from these required means of egress shall meet the requirements of applicable codes and be fully complete prior to student occupancy.

c. All combustible trash and debris shall be removed from the school facility prior to its occupancy.

d. Required utility services including telephone, electric light service and water service for fire protection shall be permanently installed prior to occupancy.

e. A one-hour fire rated and smoke proof separation shall be provided separating any construction area, or hazardous area, from those areas occupied by students. This fire and smoke barrier shall not have any door openings into student occupied areas.

f. During the time a school facility is occupied by students, no paint spraying, floor finishing or tiling shall be performed if the process involves flammable mastic, dusts or other flammable coatings. The use of open flame torches or welding of any kind shall not be permitted in student occupied areas. No testing or initial start-ups of boilers, furnaces or similar potentially hazardous equipment shall be performed during the time the school is occupied by students.

g. Any construction shed, trailer or storage of combustible material shall be located a minimum of thirty feet away from any school building.

h. Every effort shall be made to see that the final inspection is scheduled between the hours of 8:30 and 4:00 PM on normal County work days to assure at least a twenty-four hour time span prior to opening of the school in order to provide an appropriate time frame for notifying all interested parties involved in the outcome of the inspection.

i. Required ceiling assemblies and corridor partitioning and separation shall be fully completed prior to student occupancy.

j. All electrical wiring in student occupied areas shall be completed in a permanent fashion. There shall be no exposed wiring which could subject students to shock hazards.

k. There shall be present prior to occupancy adequate facilities for handling the trash accumulation associated with school construction.

l. Storage of combustible construction materials shall not be allowed in the school facility unless protected with an automatic sprinkler system and separated from the student area by a minimum of one-hour fire separation.

PART 2 PRODUCTS

Not Used

PART 3 EXECUTION

Not Used

END OF SECTION

PART 1 GENERAL

1.01 SECTION INCLUDES

A. All Bid Documents, including, but not limited to: Drawings and general provisions of the Contract, including Instructions to Bidders, Supplemental Instructions to bidders, General Conditions, Supplementary Conditions, Addenda and Division 1 of these Specifications Sections, apply to this section.

1.02 SUMMARY

A. This Section includes the following:
   1. Shop Drawings
   2. Product Data
   3. Samples
   4. Color/Pattern Selection
   5. Maintenance/Operation Manuals
   6. Warranties/Bonds
   7. Other submittals required by the Contract Documents, and re-submittals necessary to establish compliance with the specified requirements.
   8. Submittal cover sheet.

B. Related Sections: Individual requirements for submittals also may be described in pertinent Sections of these Specifications. The following sections contain requirements that relate to this section.
   1. Section 01 20 00 - Price and Payment Procedures
   2. Section 01 40 00 - Quality Requirements
   3. Various Sections - Warranties

1.03 DEFINITIONS

A. General: Work-related submittals of this section are categorized for convenience as follows, but not limited to:
   1. Shop Drawings: Include specially-prepared technical data for this Project, including drawings, diagrams, performance curves, data sheets, schedules, templates, patterns, reports, calculations, instructions, measurements and similar information not in standard print for general application to a range of similar projects.
   2. Product Data: Includes standard printed information on materials, products and systems; not specially-prepared for this project, other than the designation of selections from among available choices printed therein.
   3. Samples: Includes both fabricated and un-fabricated physical examples of materials, products and units of work; both as complete units and as smaller portions of units of work; either for limited visual inspection or (where indicated) for more detailed testing and analysis.
   4. Mock-Ups: Are a special form of samples, which are too large or otherwise inconvenient for handling in specified manner for transmittal of sample submittals.

1.04 QUALITY ASSURANCE

A. Coordination of Submittals:
   1. Prior to each transmittal of a submittal, carefully review, verify and coordinate all aspects of each item being submitted.

2. Verify that each item, and the submittal for it, conforms in all respects with the specified requirements.
3. Each copy of all submittals shall bear the required Contractor's Certification Stamp indicating that his review, verification and coordination has been performed.
4. Any submittals not bearing said stamp will be returned to the Contractor for re-submission without further consideration, in such event, it will be deemed that the Contractor has not complied with this requirement and that the Contractor shall bear the risk of all delays to the same extent as if no submittal had been made.
5. Identification of Submittals: Place a copy of the submittal cover sheet on each copy of all submittals for identification. On the cover sheet indicate the:
    a. Project name
    b. Date
    c. The name of the Contractor that prepared the submittal
    d. Specification Section Number, Title and item reference within, if applicable.
    e. Drawing sheet number and detail reference(s), designation(s)
    f. Any submittals that do not include the required cover sheet shall be returned to the Contractor for resubmission.
6. Submittal Transmittal Requirements:
    a. Submit original
    b. Identify items from only one Division of the Contract Documents on each transmittal, i.e. do not list items from Division 8 and 9 on the same transmittal.
7. Re-submittals:
    a. Reference the original submittal number on your new transmittal, e.g. Re-submittal of "23 00 00-001" or "23 00 00-001R".

1.05 CONTRACTORS RESPONSIBILITIES

A. Contractors responsibilities for compliance with the requirements of Contract Documents is not relieved by Architects/Consulting Engineer's review of submittals

B. Notify Architect, in writing at time of submittal, of any deviations from requirements of Contract Documents.

C. Begin no work which requires submittals until return of submittals with Architect/Consulting Engineer's stamp and initials or signature indicating review.

D. After Architect/Consulting Engineer's review, the General Contractor will distribute submittal copies to involved Contractors. Contractors shall ascertain that they have received all submittal information to properly execute and coordinate their work.

E. When a shop drawing or other submittal must be resubmitted by the Contractor, no changes other than those required as a result of the previous submission shall be made without the Architect/Consulting Engineer being made aware of the change. If such changes are made without so advising the Architect/Consulting Engineer, the Contractor will assume all responsibility for the possible consequences.

F. No portion of the work requiring a shop drawing, sample, or catalog data shall be started nor shall any materials be fabricated or installed prior to the review of such item.

1.06 PROCESSING OF SUBMITTALS

A. Shop Drawings, Product Data and Samples:
    1. The Contractor shall, within fifteen (15) calendar days (or sooner, if required elsewhere in the Contract Documents) after receiving the Owner's signed Contract, Notice to Proceed, Purchase Order or "Letter of Intent", forward all submittals to the Architect for review and/or approval.

2. Transmittal of Submittals:
   a. Transmit each submittal from Contractor to Architect using a transmittal form.
   b. Record on transmittal form deviations from Contract Documents requirements, including minor variations and limitations. Include the Contractor's Certificate that the information complies with the Contract Document's requirements.

1.07 CONTRACTORS "SUBMITTAL STAMP"

A. Representation: By his submittal of any shop drawings, samples, and product data, the Contractor thereby represents that he has determined and verified all field measurements, field construction criteria, materials dimensions, catalog numbers and similar data, or will do so; and that he has checked and coordinated each item with other applicable approved shop drawings and the Contract Documents requirements.

B. The Contractor shall stamp all shop drawings, samples and product date with the following certification:

"I certify that the specification requirements have been met and all dimensions, conditions and quantities are verified as shown and/or corrected on this submittal."

Signed:_____
(For) Contractor

Date:_____

C. Submittals received without the above certification will be returned, not reviewed.

1.08 SUBSTITUTION REJECTION

A. If a non approved substitution is submitted, it will be returned "Submit Specified Item". Only previously approved substitutions will be reviewed. Refer to Section 01 60 00 for substitution request procedures.

1.09 ADDITIONAL CONTRACTOR SUBMISSIONS

A. Contractor shall submit the following items:
   1. Superintendent's credentials for approval.
   2. Pre-Job Survey video/photo documentation (minimum of 3 copies)
   3. Site Specific Safety Plan.
   4. OSHA 300 logs.
   5. Sub-contractor Roles and Responsibilities signed.
   6. The Contractor shall provide upon completion of tear-off to the Owner:
      a. Waste Manifest signed by the plant after the work is complete.
   7. The Contractor shall provide upon project completion to the Owner:
      a. Fully executed Final Waiver of Lien from Contractor, subcontractor, subcontractor's laborers and material men, and Sub-Subcontractors of Subcontractor.
      b. Two year Contractor's installation Warranty.

1.10 MANUFACTURER'S INSTRUCTIONS

A. When specified in individual specification Sections, submit manufacturers' printed instructions for delivery, storage, assembly, installation, start-up, adjusting, and finishing, in quantities specified for Product Data.

B. Identify conflicts between manufacturers' instructions and Contract Documents.

1.11 MANUFACTURER'S CERTIFICATES

A. When specified in individual specification Sections, submit manufacturers' certificate to Architect/Engineer for review, in quantities specified for Product Data.

B. Indicate material or product conforms to or exceeds specified requirements. Submit supporting reference date, affidavits, and certifications as appropriate.

C. Certificates may be recent or previous test results on material or Product but must be acceptable to Architect/Engineer.

PART 2 PRODUCTS - Not Applicable

PART 3 EXECUTION

3.01 SHOP DRAWINGS

A. Before submitting shop drawings for the Architect's review, the Contractor shall check them for accuracy, shall ascertain that all work contiguous with and having bearing on other work shown on shop drawings is accurately drawn and that the work is in conformity with the Contract Document requirements.
   1. The submission of shop drawings or re-submission of corrected shop drawings constitutes evidence that the Contractor accepts and is willing to perform the work as shown, in a workmanlike manner, and in accordance with the best standard practice.
   2. Verify:
      a. Field measurements
      b. Field construction criteria
      c. Catalog numbers and similar data

B. Submit electronically in pdf format:
   1. Submit one of each required Shop Drawings indicating accurately and in scale sufficiently large enough to show all pertinent aspects of the item and its method of connection to the work.
   2. Review comments of the Architect or his Consultant Engineer will be shown on the submitted document or attached to it. The General Contractor will print copies from the returned submittal in pdf format for his needs.
   3. The Architect/Consulting Engineers distribute the submittals electronically of the shop drawings for the Owner and their use.

C. Do not use Shop Drawings without an appropriate final stamp indicating action taken in connection with construction.

D. Copies of approved shop drawings shall be maintained on site.

3.02 PRODUCT DATA

A. Before submitting product data for Architect's review the Contractor shall assemble the Product Data into a single submittal for each element of construction or system, including printed formation such as manufacturer's installation instructions, catalog cuts, color charts, letter of certification, roughing-in diagrams and templates, standard wiring diagrams, performance curves, maintenance data, calculations and schedules.

B. Mark each copy to show applicable choices and options. Where printed Product Data includes information on several products, mark copies to indicate those items being submitted.

C. Do not submit Product Data until compliance with requirements of the Contract Documents has been confirmed.

D. Submit one copy in pdf format electronically to the Architect. Reviewed submittals shall be returned electronically to the Contractor and Owner in pdf format with the submittal marked or comments attached to the pdf file.

3.03 SAMPLES

A. Before submitting samples to the Architect for approval, the Contractor shall assure himself that material represented thereby conforms to Contract Requirements and is readily available in the quantity required.

B. Provide samples identical to the precise article proposed to be provided.
1. Identify as described in "Identification of Submittals"
2. Provide samples of the size required when a specific sample size is noted.

C. Number of samples required:
1. Unless otherwise specified, submit two (2) sets of each sample.
2. By prearrangement in specific cases, a single sample may be submitted for review and, when approved, be installed in the work at a location agreed upon by the Architect.

D. Field samples / mock-ups: Of sufficient size to clearly illustrate functional characteristics of product or material unless otherwise indicated by the projects Architect.
1. Construct each complete, including work of all trades required in finished work.

3.04 COLORS, FINISH AND/OR PATTERN SELECTION

A. Submit the precise color and pattern that is specifically called out in the Contract Documents unless a choice of colors or patterns are requested.

B. Number of Copies Required:
1. Submit three (3) color or pattern samples of each specified item requiring color and/or pattern selection.

3.05 ELECTRONIC BACKGROUNDS

A. If the Contractor and/or subcontractors require an electronic file of the construction documents, only plan backgrounds will be provided at a cost of $35.00 per drawing plus $15.00 architectural handling fee. Total $50.00 per drawing.
1. Backgrounds will be released with no title blocks.
2. Architect's/Engineer's drawings that are resubmitted as a shop drawing will be rejected.

B. Request must be made in writing to the Architect by the General Contractor.

C. Electronic files will not be released until a check is submitted made to the order of Bushey Feight Morin Architects.

3.06 CONSULTANT REVIEWS

A. A maximum of two (2) reviews will be provided by the A/E consultants.

B. If a third or more consultant reviews are required, the Contractor will be invoiced on a time and material basis.
1. The cost of additional reviews will be invoiced to the General Contractor with payment due in thirty (30) calendar days from the date of the invoice.

END OF SECTION

PART 1 GENERAL

1.01 SECTION INCLUDES

A. Quality assurance and control of installation.

B. Quality Control

C. Regulatory Requirements

D. References.

E. Manufacturers' field services and reports.

1.02 RELATED SECTIONS

A. Section 01 33 00 - Submittal Procedures: Submission of Manufacturers' Instructions and Certificates.

B. Section 01 60 00 - Material and Equipment: Requirements for material and product quality.

1.03 QUALITY ASSURANCE/CONTROL OF INSTALLATION

A. Monitor quality control over suppliers, manufacturers, Products, services, site conditions, and workmanship, to produce Work of specified quality.

B. Comply fully with manufacturers' instructions, including each step in sequence.

C. Should manufacturers' instructions conflict with Contract Documents, request clarification from Architect/Engineer before proceeding.

D. Comply with specified standards as a minimum quality for the Work except when more stringent tolerances, codes, or specified requirements indicate higher standards or more precise workmanship.

E. Perform work by persons qualified to produce workmanship of specified quality.

F. Secure Products in place with positive anchorage devices designed and sized to withstand stresses, vibration, physical distortion or disfigurement.

1.04 QUALITY CONTROL

A. Contractor shall:

1. Submit an affidavit attesting the subcontractor has in place and fully implemented a written Health, Safety and Environmental plan and the plan is compliant with all applicable Federal, State, and local regulations.
2. Be experienced in similar membrane roofing systems with for a 5-year minimum.
3. For portions of this project where asbestos removal and disposal occur, Roofing Contractor or their subcontractor shall be State certified for asbestos abatement work.
4. Be acceptable to Owner.
5. Be Manufacturer certified or an approved Contractor to install Manufacturer’s products.
6. Has not been in Chapter 7 bankruptcy during the last ten (10) years.
7. Provide list of at least 5 projects available for inspection employing the same roof system.

1.05 REGULATORY REQUIREMENTS

A. Regulatory requirements: By reference of the following standards the contractor shall install the roof system in accordance to the following standards:
   1. Underwriters Laboratories (UL)
      a. UL Classified Fire Rating – UL 790, Class A
   2. Factory Mutual – FM 4470 Class I Standards with
      a. FM 1-90 Insulation and Base Sheet Attachment requirements
      b. FM 1-90 Wind Loading – wind loading requirements
   3. ASTM D6878 – TPO system must meet minimum requirements.

1.06 REFERENCES

A. Conform to reference standard by date of issue current on date of Contract Documents.

B. Obtain copies of standards when required by Contract Documents.

C. Should specified reference standards conflict with Contract Documents, request clarification for Architect/Engineer before proceeding.

D. The contractual relationship of the parties to the Contract shall not be altered from the Contract Documents by mention or inference otherwise in any reference document.

1.07 MANUFACTURERS' FIELD SERVICES AND REPORTS

A. Submit qualifications of observer to Architect/Engineer 30 days in advance of required observations. Observer subject to approval of Architect/Engineer and Owner.

B. When specified in individual specification Sections, require material or Product suppliers or manufacturers to provide qualified staff personnel to observe site conditions, conditions of surfaces and installation, quality of workmanship, start-up of equipment, test, adjust, and balance of equipment and as applicable, and to initiate instructions when necessary.

C. Individuals to report observations and site decisions or instructions given to applicators or installers that are supplemental or contrary to manufacturers' written instructions.

D. Submit report in triplicate within 30 days of observation to Architect/Engineer for review.

E. Schedule of Manufacturers' Field Services and Reports:
   1. Section 07 54 10 - Thermoplastic Polyolefin (TPO) Membrane Roofing.

PART 2 PRODUCTS

Not Used

PART 3 EXECUTION

Not Used

END OF SECTION

PART 1 GENERAL

1.01 SECTION INCLUDES

A. Temporary Utilities: Electricity, water, and sanitary facilities.

B. Temporary Controls: Barriers, protection of the Work, and water control.

C. Safety Requirements

D. Site Controls: Odors.

E. Progress Cleaning.

F. Tankers. (N/A)

G. Removal of Utilities, Facilities and Controls.

H. Interior Protection.

I. Project Identification

1.02 RELATED SECTIONS

A. Section 01 70 00 - Contract Closeout: Final cleaning.

1.03 TEMPORARY ELECTRICITY

A. Owner will pay for power service required from existing Utility source.

B. Provide temporary electric feeder from existing building electrical service. Power consumption shall not disrupt Owner's need for continuous service.

C. Provide power outlets for construction operations, with branch wiring and distribution boxes. Provide flexible power cords as required.

D. Provide main service disconnect and over-current protection at convenient location.

E. Permanent convenience receptacles may be utilized during construction.

1.04 TEMPORARY WATER SERVICE

A. Owner will pay for suitable quality water service required. Connect to existing water source for construction operations.

B. Extend branch piping with outlets located so water is available by hoses with threaded connections.

1.05 TEMPORARY SANITARY FACILITIES

A. Provide and maintain required facilities and enclosures.

B. Place portable toilets in conformance with applicable laws, codes, and regulations. At end of construction, return facilities to same or better condition than originally found.

C. The suitable location will be determined at the pre-construction meeting.

1.06 BARRIERS

A. Provide barriers to prevent unauthorized entry to construction areas to allow for Owner's use of site, and to protect existing facilities and adjacent properties from damage from construction operations and demolition.

B. Provide barricades and covered walkways required by governing authorities for public rights-of-way and for public access to existing building.

C. Provide protection for plant life designated to remain. Replace damaged plant life.

D. Protect non-owned vehicular traffic, stored materials, site and structures from damage.

1.07 SAFETY REQUIREMENTS:

A. All application, material handling, and associated equipment shall conform to and be operated in conformance with OSHA safety requirements. Contractor and subcontractors shall follow OSHA and Owner safety programs.

B. Comply with federal, state, local and Owner fire and safety requirements.

C. Advise project superintendent whenever work is expected to be hazardous to Owner, employees, and/or operators.

D. A crewman with two-way communication (i.e., radio, mobile phone) shall be maintained by the contractor as a floor area guard whenever tear-off work is being conducted and when roof decking is being repaired or replaced. Aisle ways shall have traffic cones and safety tape put up to warn and/or divert personnel from walking beneath areas under construction. Floor guard shall be maintained until base ply is completely installed.

E. The contractor, whenever power tools, roofing kettles, fuels, solvents, torches, and open flames are being used shall maintain fire extinguishers within easy access.

F. Roofing contractor is required to have an OSHA approved fall protection plan in place prior to the start of work. The roofing contractor shall include in his proposal all safety railing and barricades to protect his crews. The roofing contractor shall present a safety plan prior to the pre-construction meeting. All fall protection shall conform to state and federal regulations as outlined in OSHA CODE OF FEDERAL REGULATION 29 PART 1926.500 SUB PART M. The awarded roofing subcontractor shall submit a safety plan to the Contractor for submittal to the Owner containing to each item listed below as it pertains to the specific project.

G. Fall Protection: Fall protection is required whenever subcontractors are working on a surface that has an unprotected side or edge that is six (6) feet or more above a lower level. An unprotected edge is one that has a parapet wall that is less than 39 inches in height. The slope of the roof dictates which fall protection system or systems may be used.

1. Low Slope Roofs - (Slope is less than or equal to 4 in 12.) On low slope roofs, employees shall be protected from falling by guardrail systems, personal fall arrest systems, or a combination of warning line system and guardrail system, or warning line system and personal fall arrest system, or warning line system and safety monitoring system. On roofs 50 feet or less in width, the use of a safety monitoring system alone is permitted.
2. Steep Roofs - (Slope is greater than 4 in 12.) On steep roofs, employees shall be protected from falling by guardrail systems with toe boards or personal fall arrest systems.

3. Warning Line System
    a. When mechanical equipment (mechanical equipment meaning all motor or human-propelled, wheeled equipment used for roofing work except wheelbarrows and mop carts) is not being used, the warning line shall be erected no less than six (6) feet from the roof edge.
    b. When mechanical equipment is being used, the warning line shall be erected not less than six (6) feet from the roof edge that is parallel to the direction of mechanical equipment operation and not less than ten (10) feet from the roof edge, perpendicular to the direction of the mechanical equipment operation.
    c. Stanchions shall be set not further than 12 feet apart.
    d. Warning lines shall be a height of 39 inches at the highest point and 34 inches at the lowest point, including sag. They shall be flagged at not more than six (6) foot intervals with high visibility material.
    e. All employees working outside the warning line and within six (6) feet of the roof edge must wear a full safety harness with the "0" ring located in the rear. A six (6) foot shock-absorbing lanyard with rollout protection also must be used. This lanyard is to be located between the lifeline and the harness. In cases where work outside the warning line is to be performed, a Safety Monitoring System or an approved OSHA fall protection system may be used. (See section below)

H. Safety Monitoring System
1. A documented competent person monitors the safety of all employees on a roofing or sheet metal crew and warns them when it appears to the monitor that they are unaware of a hazard or are acting in an unsafe manner. The competent person must be on the same roof as, and within visual sighting distance of, the employees and must be close enough to verbally communicate with the employees.
2. Only used on low slope roofs that are 50 feet or less in width if no other fall prevention system is installed. Can be used on low slope roofs of any width if combined with a warning line system.
3. No mechanical equipment shall be used with this system.
4. Parapet Wall Clamp-On Guardrail System
    a. Used on roofs where the parapet wall is less than 39 inches.
    b. Clamp-on posts must be spaced eight (8) feet or less apart.
    c. Top rail positions 42 inch plus or minus 3 inches high.
    d. Mid-rail between the top rail and top of the parapet wall at 21 inches.
    e. If a section of the railing has to be removed to perform work, lifelines, and safety harnesses with six (6) foot lanyards must be used while working in the unprotected area.
    f. If 1/4 inch steel cable is used at the top and mid-rail, the top cable must be flagged at no more than six (6) foot intervals with a highly visible material.

I. Guardrail Systems
1. Top edge of top rail shall be 42 inches plus or minus 3 inches above the working surface.
2. Mid-rails are required if there is no wall or parapet wall at least 21 inches higher. When used, mid-rails shall be installed at a height midway between the top edge of the guardrail and the working level.
3. Guardrail posts shall be at least two (2) inch by four (4) inch lumber spaced not more than eight (8) feet apart on centers.

4. The top rail shall be at least two (2) by four (4) inch lumber. The intermediate rail shall be at least one (1) inch by six (6) inch lumber.
5. Toe boards shall be a minimum of 3-1/2 inches in vertical heights.
6. When guardrail systems are used at hoisting areas, a chain, gate, or removable guardrail section shall be placed across the access opening between guardrail sections when hoisting operations are not taking place. When guardrail systems are used at holes or skylights, they shall be erected on all unprotected sides or edges of the hole.
7. When guardrail systems are used at holes or skylights, they shall be erected on all unprotected sides or edges of the hole.
8. When guardrail systems are used around holes used for ladder access, they shall be provided with a gate or be so offset that a person cannot walk directly into the hole.
9. Manila, plastic or synthetic rope used for top rails or mid-rails shall be inspected as frequently as necessary to ensure that it continues to meet OSHA strength requirements.

J. Catch Platforms
1. Catch platforms consist of ladder jack scaffolding with guardrails, mid-rails and toe boards or welded tube scaffolding with guardrails, mid-rails and toe boards.
2. Both of the above scaffolds must have platform that extend two (2) feet wide or better beyond the eave with no gap.

K. Personal Fall Arrest System
1. Only full body harnesses with either shock-absorbing lanyard or lifelines, or a combination thereof, shall be used when required. All snap hooks shall be of the locking variety.
2. Personal fall arrest systems shall be rigged such that employees can neither free-fall more than six (6) feet or contact any lower level.
3. Self-retracting lifelines shall automatically limit free-fall distance to two feet or less.

L. Covers
1. Cover for holes in floors, roofs, and other surfaces shall be capable of supporting, without failure, at least twice the weight of employees, equipment and materials that may be imposed on the cover at any one time.
2. Covers shall be secured when installed to prevent accidental displacement by the wind, equipment or employees.
3. All covers shall be color-coded or marked with the work "HOLE" or "COVER".
4. Covers shall not be stood on, sat on, nor have any materials placed upon them.

1.08 SITE CONTROL - ODORS

A. Contractor shall mitigate all odors from roofing operations from penetrating the school building including, but not limited to the following:
1. Keep building doors and windows closed at all times, coordinate with Frederick County Public Schools.
2. The use of adhesive and other liquid roof components shall be down wind of any air intakes and set tankers (if hot asphalt is used) in down wind location.
3. Shut down of all adjacent HVAC/RTU’s units; cover or seal all intakes and exhaust air opening; and provide charcoal filters secured to vent openings.
4. Pay attention to wind direction and working accordingly to prevent odors from entering building.
5. Provide exhaust fans on interior to push/pull fumes out of building if needed.

1.09 PROTECTION OF INSTALLED WORK

A. Protect installed Work and provide special protection where specified in individual specification Sections.

B. Provide temporary and removable protection for installed Products. Control activity in immediate work area to minimize damage.

C. Provide protective coverings at walls, projections, jambs, sills, and soffits of openings.

D. Protect finished floors, stairs, and other surfaces from traffic, dirt, wear, damage, or movement of heavy objects, by protecting with durable sheet materials.

E. Prohibit traffic or storage upon waterproofed or roofed surfaces. If traffic or activity is necessary, obtain recommendations for protection from waterproofing or roofing material manufacturer.

F. Prohibit traffic from landscaped areas.

1.10 SECURITY

A. Provide security and facilities to protect Work, and existing facilities, and Owner's operations from unauthorized entry, vandalism, or theft.

B. Coordinate with Owner's security program.

1.11 PROGRESS CLEANING

A. Maintain areas free of waste materials, debris, and rubbish. Maintain site in a clean and orderly condition.

B. Remove debris and rubbish from pipe chases, plenums, attics, crawl spaces, and other closed or remote spaces, prior to enclosing the space.

C. Broom and vacuum clean interior areas prior to start of surface finishing, and continue cleaning to eliminate dust.

D. Remove waste materials, debris, and rubbish from site weekly and dispose off-site.

E. Cleaning of construction debris shall occur daily for both the building and site.

1.12 TANKERS: (if hot asphalt is used) (N/A)

A. As part of the Contractor’s Construction Schedule, the proposed location(s) of tanker equipment shall be submitted for the Owner’s review.

B. Kettles will not be permitted onsite unless approved in writing by the Owner. Permission must be requested and approved. Additional requirements may be enforced dependent on site and safety.

C. Tankers and kettles shall be kept a minimum of 15 feet away from the exterior building walls and shall be segregated from the surrounding areas by temporary secured metal link fencing.

D. The designated asphalt tanker/kettle operator must remain on the same elevation, within 25 feet and within visual contact of the operational tanker/kettle at all times, and perform no other duties than tending the tanker/kettle to monitor bitumen temperatures during tanker/kettle operation and ensure that safe heating temperatures are not exceeded.

E. Provide a minimum of two fully charged and operable fire extinguishers at the asphalt tanker location.

1.13 REMOVAL OF UTILITIES, FACILITIES, AND CONTROLS

A. Remove temporary above grade or buried utilities, equipment, facilities, materials, prior to Substantial Completion inspection.

B. Remove underground installations to a minimum depth of 2 feet. Grade site as indicated.

C. Clean and repair damage caused by installation or use of temporary work.

D. Restore existing facilities used during construction to original condition. Restore permanent facilities used during construction to specified condition.

1.14 INTERIOR PROTECTION AND RESTORATION

A. Protect and cover fixed items, furniture, equipment, appliances, fixtures, bookcases, etc. within the building below the work areas.

B. At the Owner's direction, remove portable furniture, equipment, appliances, fixtures, materials, stock, etc. within the building below the work area to an adjacent area for protection.

C. Consult Pre-Job Survey if any questions arise due to previous conditions or clams of damage by the re-roofing operation upon completion of the work to compare the current condition to the original condition.

1.15 PROJECT IDENTIFICATION

A. Project Identification Sign:
   1. One painted sign of construction, design, and content shown on Drawing included at the end of this section. Background color shall be white, text shall be black, accent bands shall be yellow, and flag shall be red, yellow and black with white background.
   2. One painted sign, 32 sq ft area, and bottom 6 feet above ground.
   3. Lettering: Series C of Standard Alphabet for Highway Signs, Public Roads Administration, Federal Works Agency.

B. Design sign and structure to withstand 60 miles/hr wind velocity.

C. Sign Painter: Experienced as professional sign painter for minimum three years.

D. Finishes, Painting: Adequate to withstand weathering, fading, and chipping for duration of construction.

E. Show content, layout, lettering, color, foundation, structure, sizes, and grades of members.

F. Sign Materials:
   1. Structure and Framing: New, wood, structurally adequate.
   2. Sign Surfaces: Exterior grade plywood with medium density overlay, minimum 3/4 inches thick, standard large sizes to minimize joints.
   3. Rough Hardware: Galvanized or brass.
   4. Paint and Primers: Exterior quality, two coats; sign background of color as selected.
   5. Lettering: Exterior quality paint, contrasting colors as selected.
   6. Lettering: Pre-cut vinyl self-adhesive products are acceptable in lieu of painted lettering.

G. Installation:
   1. Install project identification sign within 15 days after date fixed by Owner-Contractor Agreement.

2. Erect at designated location with high public visibility adjacent to main entrance to site.
3. Erect supports and framing on secure foundation, rigidly braced and framed to resist wind loadings.
4. Install sign surface plumb and level, with butt joints. Anchor securely.
5. Paint exposed surfaces of sign, supports, and framing.

H. Maintenance: Maintain signs and supports clean, repair deterioration and damage.

I. Removal: Remove signs, framing, supports, and foundations at completion of Project and restore area.

PART 2 PRODUCTS

Not Used

PART 3 EXECUTION

Not Used

END OF SECTION

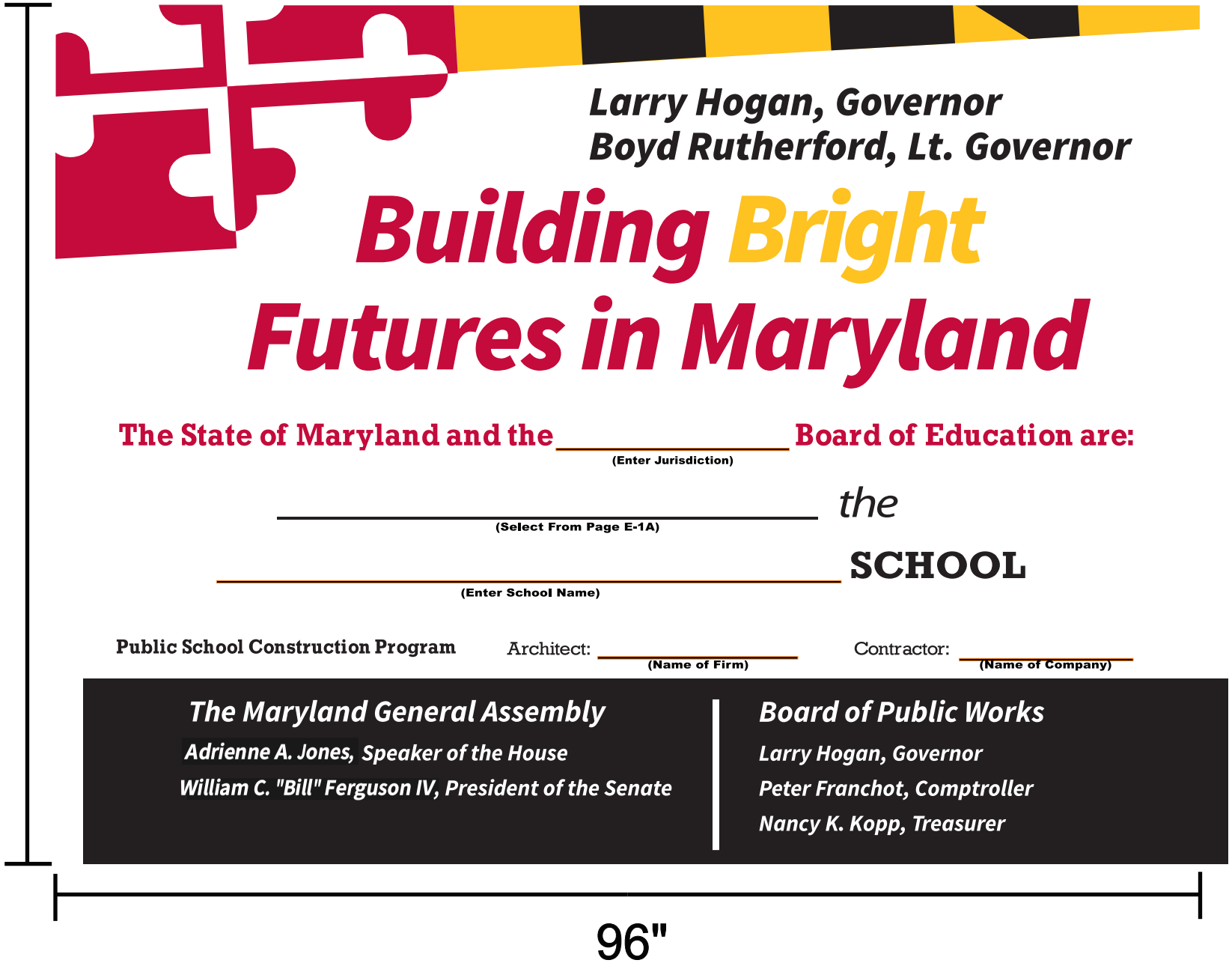
Larry Hogan, Governor
Boyd Rutherford, Lt. Governor
Building Bright
Futures in Maryland
The State of Maryland and the _____ Board of Education are:
(Enter Jurisdiction)
_____ the
(Select From Page E-1A)
_____ SCHOOL
(Enter School Name)
Public School Construction Program
Architect: _____
(Name of Firm)
Contractor: _____
(Name of Company)
The Maryland General Assembly
Adrienne A. Jones, Speaker of the House
William C. "Bill" Ferguson IV, President of the Senate
Board of Public Works
Larry Hogan, Governor
Peter Franchot, Comptroller
Nancy K. Kopp, Treasurer
72"
96"

APPENDIX E
FOR SCHOOL CONSTRUCTION SIGN

The following appropriate language should be entered on the construction sign to describe the work for the specific project (or modified as required):

- Renovating
- Constructing an Addition and Renovating
- Constructing an Addition to
- Constructing a Replacement School for
- Constructing the New
- Constructing a Prekindergarten Addition at
- Renovating the Science Laboratories at
- Replacing the Roof at
- Replacing the Boilers at
- Replacing the Windows at
- Replacing the (other systemic) at

PART 1 GENERAL

1.01 SECTION INCLUDES

A. Products.

B. Transportation and handling.

C. Storage and protection.

D. Product options.

E. Substitutions.

1.02 RELATED SECTIONS

A. Section 00 01 00 - Instructions to Bidders: Product options and substitution procedures.

B. Section 01 40 00 - Quality Control: Product quality monitoring.

1.03 PRODUCTS

A. Products: Means new material, machinery, components, equipment, fixtures, and systems forming the Work. It does not include machinery and equipment used for preparation, fabrication, conveying and erection of the Work. Products may also include existing materials or components required for reuse.

B. Do not use materials and equipment removed from existing premises, except as specifically permitted by the Contract Documents.

C. Provide interchangeable components of the same manufacturer, for similar components.

1.04 TRANSPORTATION AND HANDLING

A. Transport and handle products in accordance with manufacturer's instructions.

B. Promptly inspect shipments to assure that products comply with requirements, quantities are correct, and products are undamaged.

C. Provide equipment and personnel to handle products by methods to prevent soiling, disfigurement, or damage.

D. Delivery of Materials:
   1. Deliver materials to job-site in new, dry, unopened, and well-marked containers showing product and manufacturers name.
   2. Deliver materials in sufficient quantity to allow continuity of work.
   3. Coordinate delivery with Owner.
   4. Do not order project materials or start work before receiving written notice to proceed.

1.05 STORAGE AND PROTECTION

A. Contractor shall assume full responsibility for the protection and safekeeping of products stored on premises.

B. Store and protect products in accordance with manufacturer's instructions, with seals and labels intact and legible. Store sensitive products in weather-tight, climate controlled enclosures.

C. Storage of Materials:
   1. Store rolled goods on ends only.
   2. Discard rolls, which have been flattened, creased, or otherwise damaged. Place materials on pallets. Store rolled goods on level pallets. Do not stack pallets.
   3. Store materials marked "KEEP FROM FREEZING" in areas where temperatures will remain above 40 degrees F.
   4. For insulation, remove plastic packaging shrouds. For felt rolls, slit the top of the plastic shrink-wrap only. Cover top and sides of all stored materials with tarpaulin (not polyethylene). Secure tarpaulin. Canvas tarpaulin only to be used for material protection. Provide ventilation to avoid condensation.
   5. Rooftop storage: Disperse material to avoid concentrated loading, verify exiting structural member location and loading requirements.
   6. Do not store materials in open or in contact with ground or roof surface.
   7. Store all materials on a raised platform covered with secured canvas tarpaulin (not polyethylene), top to bottom. Cover all materials when project is not in progress and maintain the ability at all times to cover the materials when required, such as during an unanticipated rain shower.

D. Material Handling:
   1. Handle materials to avoid bending, tearing, or other damage during transportation and installation.
   2. Material handling equipment shall be selected and operated so as not to damage existing construction or applied roofing. Do not operate or locate material handling equipment in areas that will hinder smooth flow of vehicular or pedestrian traffic.

E. For exterior storage of fabricated products, place on sloped supports, above ground.

F. Provide off-site storage and protection when site does not permit on-site storage or protection.

G. Store loose granular materials on solid flat surfaces in a well-drained area. Provide mixing with foreign matter.

H. Provide equipment and personnel to store products by methods to prevent soiling, disfigurement, or damage.

I. Arrange storage of products to permit access for inspection. Periodically inspect to assure products are undamaged and are maintained under specified conditions.

1.06 PRODUCT OPTIONS

A. Products Specified by Reference Standards or by Description Only: Any product meeting those standards or description.

B. Products Specified by Naming One or More Manufacturers: Products of manufacturers named and meeting specifications, no options or substitutions allowed.

C. Products Specified by Naming One or More Manufacturers with a Provision for Substitutions: Submit a request for substitution for any manufacturer not named.

1.07 SUBSTITUTIONS

A. Instructions to Bidders specify time restrictions for submitting requests for Substitutions during the bidding period to requirements specified in this Section.

B. Substitutions may be considered when a product becomes unavailable through no fault of the Contractor.

C. Document each request with complete data substantiating compliance of proposed Substitution with Contract Documents.

D. A request constitutes a representation that the Bidder:
   1. Has investigated proposed product and determined that it meets or exceeds the quality level of the specified product.
   2. Will provide the same warranty for the Substitution as for the specified product.
   3. Will coordinate installation and make changes to other Work which may be required for the Work to be complete with no additional cost to Owner.
   4. Waives claims for additional costs or time extension which may subsequently become apparent.

E. Substitutions will not be considered when they are indicated or implied on shop drawing or product data submittals, without separate written request, or when acceptance will require revision to the Contract Documents.

F. Substitution Submittal Procedure:
   1. Submit one (1) copy in pdf. format electronically of request for Substitution for consideration. Limit each request to one proposed Substitution.
   2. Submit shop drawings, product data, and certified test results attesting to the proposed product equivalence.
   3. The Architect/Engineer will notify Contractor, in writing, of decision to accept or reject request.
   4. Unless product is unavailable, no substitution of products will be permitted after receipt of bids. In the event that the Contractor requests a substitution after bids, the Owner may exercise his right to request a credit for the substituted product.

PART 2 PRODUCTS

Not Used

PART 3 EXECUTION

Not Used

REQUEST FOR SUBSTITUTION

DATE OF REQUEST: _____

PROJECT: FCPS: Lincoln 'A' Facility– Roof Replacement

CONTRACTOR: _____

TELEPHONE NO: _____

FACSIMILE NO: _____

CONTACT: _____

CONTRACT PACKAGE: _____

1. Item for which substitution is being requested:

   _____

2. Reference Specification Section: _____

3. Reference Drawing: _____

4. Reason for Substitution Request:_____

   _____

5. Product Comparison:

   Submit a copy of shop drawing, product data, color samples, utility requirements and certified test results attesting to the proposed product equivalence electronically in pdf. format to Owner and Architect.

   a. _____ Data substantiating compliance of proposed substitution with contract documents.

   b. _____ Product identification, manufacturer's name, address and telephone number.

   c. _____ Manufacturer's literature, warranty.

   d. _____ Full color selection, showing colors Architect may select without additional cost.

   e. _____ Samples

   f. _____ Warranty

   g. _____ References of product use.

   h. _____ Itemized comparison of proposed substitution with product or method specified. Highlight all differences from specified item.

   i. _____ All items listed in the specification for submittals and quality assurance requirements.

   j. _____ Cover letter stating benefits or equality of substitution and reason for substitution request.

6. If request is being submitted after the receipt of bids, attach price quotations of specified product and substituted products.

END OF SECTION

PART 1 GENERAL

1.01 SECTION INCLUDES

A. Closeout procedures.

B. Final cleaning.

C. Adjusting.

D. Project record documents.

1.02 RELATED SECTIONS

A. Section 01 50 00 - Construction Facilities and Temporary Controls: Progress cleaning.

B. Section 01 74 00 - Warranties and Bonds.

1.03 CLOSEOUT PROCEDURES

A. Submit written certification that Contract Documents have been reviewed, Work has been inspected, and that Work is complete in accordance with Contract Documents and ready for Architect/Engineer's inspection.

B. Provide submittals to Architect/Engineer that are required by governing or other authorities.

C. Submit final Application for Payment identifying total adjusted Contract Sum, previous payments, and sum remaining due.

D. Owner will occupy portions of the building as specified in Section 01 01 00.

1.04 FINAL CLEANING

A. Execute final cleaning prior to final inspection.

B. Clean equipment and fixtures to a sanitary condition.

C. Clean debris from roofs, gutters, downspouts, and drainage systems.

D. Clean site; sweep paved areas, rake clean landscaped surfaces disturbed by construction.

E. Remove waste and surplus materials, rubbish, and construction facilities from the site.

1.05 ADJUSTING

A. Adjust operating Products and equipment to ensure smooth and unhindered operation.

1.06 PROJECT RECORD DOCUMENTS

A. Maintain on site, one set of the following record documents; record actual revisions to the Work:
   1. Contract Drawings.
   2. Specifications.
   3. Addenda.
   4. Change Orders and other Modifications to the Contract.
   5. Reviewed shop drawings, product data, and samples.
   6. Material Safety Data sheets for each material used.

B. Store Record Documents separate from documents used for construction.

C. Record information concurrent with construction progress.

D. Specifications: Legibly mark and record at each Product section description of actual Products installed, including the following:
   1. Manufacturer's name and product model and number.
   2. Product substitutions or alternates utilized.
   3. Changes made by Addenda and Modifications.

E. Record Documents and Shop Drawings: Legibly mark each item to record actual construction:
   1. Field changes of dimension and detail.
   2. Details not on original Contract Drawings.

F. Delete Architect/Engineer title block and seal from all documents.

G. Submit documents and bond material safety data sheets to Architect/Engineer with claim for final Application for Payment.

PART 2 PRODUCTS

Not Used

PART 3 EXECUTION

Not Used

END OF SECTION

PART 1 GENERAL

1.01 SUMMARY

A. This Section includes the following:
   1. Water test roof drains and storm drain lines.
   2. Remove and discard full extent of built-up roofing membranes, insulation, base flashings, and related sheet metal flashings and trim down to the surface of the metal decks.
   3. Remove and discard roof drains.
   4. Temporarily remove and reconnect rooftop mechanical units, exhaust fans, hatch/ curb assemblies and electrical conduits to allow for roofing system replacement.
   5. Provide new scupper openings and salvage brick.
   6. Trim duct steel supports.

B. Related Sections include the following:
   1. Section 01 01 00 - Summary of Work: Identification of asbestos-containing materials.
   2. Section 01 04 50 - Cutting and Patching
   3. Section 07 54 10 - Thermoplastic Polyolefin (TPO) Membrane Roofing

1.02 DEFINITIONS

A. Remove: Detach items from existing construction and legally dispose of them off-site, unless indicated to be removed and salvaged or removed and reinstalled.

B. Remove and Salvage: Detach items from existing construction and deliver them to Owners' storage area within school complex.

C. Remove and Reinstall: Detach items from existing construction, prepare them for reuse, and reinstall them where indicated.

D. Existing to Remain: Existing items of construction that are not to be removed and that are not otherwise indicated to be removed, removed and salvaged, or removed and reinstalled.

1.03 SUBMITTALS

A. Photographs of existing conditions of structure surfaces, equipment, and adjacent improvements that might be misconstrued as damage related to roofing removal operations. File with Owner's Representative prior to start of work.

B. Qualification Data: For refrigerant recovery technician.

C. Schedule of Selective Demolition Activities: Indicate the following:
   1. Detailed sequence of selective demolition and removal work, with starting and ending dates for each activity. Ensure Owner's on-site operations are uninterrupted.
   2. Interruption of utility services. Indicate how long utility services will be interrupted.
   3. Coordination for shutoff, capping, and continuation of utility services.
   4. Use of exterior stair tower, hoists and cranes.
   5. Locations of proposed dust- and noise-control temporary partitions and means of egress.
   6. Coordination of government personnel continuing occupancy of existing building.

7. Means of protection for items to remain and items in path of waste removal from building.

D. Inventory: After selective demolition is complete, submit a list of items that have been removed and salvaged.

E. Submit, during execution of contract, a plan showing quantity and location of all work performed on a unit price basis.

F. Landfill Records: Indicate receipt and acceptance of hazardous wastes by a landfill facility licensed to accept hazardous wastes.

1.04 QUALITY ASSURANCE

A. Demolition Firm Qualifications: Roofing system demolition shall be performed by an experienced firm that has specialized in demolition work similar in material and extent to that indicated for this Project.

B. Refrigerant Recovery Technician Qualifications: Certified by an EPA-approved certification program.

C. Regulatory Requirements: Comply with governing EPA notification regulations before beginning selective demolition. Comply with hauling and disposal regulations of authorities having jurisdiction.

D. Standards: Comply with ANSI A10.6 and NFPA 241.

E. Predemolition Conference: Conduct conference at Project site. Review methods and procedures related to selective demolition including, but not limited to, the following:
1. Inspect and discuss condition of construction to be selectively demolished.
2. Review structural load limitations of existing structure.
3. Review and finalize selective demolition schedule and verify availability of materials, demolition personnel, equipment, and facilities needed to make progress and avoid delays.
4. Review requirements of work performed by other trades that rely on substrates exposed by selective demolition operations.
5. Review areas where existing construction is to remain and requires protection.
6. Review hazardous waste removal, handling and disposal procedures.

1.05 PROJECT CONDITIONS

A. Owner will occupy portions of building immediately adjacent to selective demolition area. Conduct selective demolition so Owner's operations will not be disrupted.
1. Comply with requirements specified in Section 01 01 00 - Summary of Work.

B. Notify Owner and Architect in writing of discrepancies between existing conditions and Drawings before proceeding with selective demolition.

C. Hazardous Materials: Hazardous materials may be present in construction to be selectively demolished. If encountered notify contracting officer before continuing.

D. Storage or sale of removed items or materials on-site is not permitted.

E. Utility Service: Maintain existing utilities indicated to remain in service and protect them against damage during selective demolition operations.
1. Maintain fire-protection facilities in service during selective demolition operations.

F. Complete mechanical and electrical demolition and new work prior to demolition of existing roof.

G. Protections: Provide temporary barricades and other forms of protection to protect general public and school children from injury and damage to property due to selective demolition work.
   1. Provide protective measures as required to provide free and safe passage of pedestrians (school children and general public) to occupied portions of building.
   2. Erect temporary covered passageways as required by authorities having jurisdiction.
   3. Protect from damage existing finish work that is to remain in place and becomes exposed during adjacent demolition operations.
   4. Remove protections at completion of work.

1.06 SPECIAL CONDITIONS

A. The Contractor is responsible for conducting work so normal routines, activities and procedures at the building are not disturbed. No work may take place over occupied sections of the Building. Coordinate work with the Owner's Representative.

B. The Owner's Site Representative shall have the power to order the permanent removal from the premises any employee of the Contractor for interference with the building's operation or for incompetence. Furthermore, The Owner's Site Representative shall have the power to stop work if the Representative believes the work is not progressing in accordance with the Contract Documents or membrane manufacturer's specifications. The Contractor shall immediately comply with this order.

C. Coordinate with the mechanical contractor to disconnect, remove, reroute and reconnect all conduit lines to all roof top equipment. Mechanics performing electrical and freon work must be licensed in the State of Maryland. Prior to disconnection, test the units in the presence of the Owner's Representative and provide a written report verifying the operating conditions.

D. Hazardous Materials: Limited asbestos testing has been performed on the roofing materials. The contractor is responsible for complying with all local, state and federal regulations related to the disturbance and/ or removal of these materials.

1.07 WARRANTY

A. Existing Warranties: Remove, replace, patch, and repair materials and surfaces cut or damaged during selective demolition, by methods and with materials so as not to void existing warranties.

PART 2 PRODUCTS

Not Used

PART 3 EXECUTION

3.01 EXAMINATION

A. Survey existing conditions and correlate with requirements indicated to determine extent of selective demolition required.

B. Inventory and record the condition of items to be removed and reinstalled.

C. When unanticipated mechanical, electrical, or structural elements that conflict with intended function or design are encountered, investigate and measure the nature and extent of conflict. Promptly submit a written report to Owner and Architect.

3.02 UTILITY SERVICES AND MECHANICAL/ELECTRICAL SYSTEMS

A. Existing Services/ Systems: Maintain services/ systems indicated to remain and protect them against damage during selective demolition operations.
   1. Comply with requirements for existing services/systems interruptions specified in Section 01 01 00 "Summary of Work."

B. Service/ System Requirements: Locate, identify, disconnect, and seal or cap off indicated utility services and mechanical/ electrical systems serving areas to be selectively demolished.
   1. The Owner will arrange to shut off indicated services/systems when requested by Contractor.

3.03 PREPARATION

A. Water test existing storm drain lines and water test again after new drains are installed. Prior to any demolition, water test all roof drains, storm drain lines and drain lines in work and material storage areas with 3/4 inch diameter garden hose flowing at maximum capacity. Report all blockages to Owner and Architect in writing. All blocked drain lines discovered after demolition has begun, including removal of gravel, will be cleaned out and made free-draining at no cost to the Owner.

B. Protections: Provide temporary barricades and other protection required to protect general public from injury and damage building due to selective demolition work.
   1. Provide protection to ensure safe passage of people around selective demolition area and to and from occupied portions of building.

C. Cover and protect furniture, equipment, and fixtures from soilage or damage when demolition work is performed in areas where such items have not been removed.

D. Erect and maintain dust-proof partitions and closures as required to prevent spread of dust or fumes to occupied portions of the building.

3.04 SELECTIVE DEMOLITION, GENERAL

A. General: Demolish and remove existing construction only to the extent required by new construction and as indicated. Use methods required to complete the Work within limitations of governing regulations and as follows:
   1. Neatly cut openings and holes plumb, square, and true to dimensions required. Use cutting methods least likely to damage construction to remain or adjoining construction. Use hand tools or small power tools designed for sawing or grinding, not hammering and chopping, to minimize disturbance of adjacent surfaces. Temporarily cover openings to remain.
   2. Cut or drill from the exposed or finished side into concealed surfaces to avoid marring existing finished surfaces.
   3. Do not use cutting torches.
   4. Locate selective demolition equipment and remove debris and materials so as not to impose excessive loads on supporting walls, floors, or framing.
   5. Dispose of demolished items and materials promptly.

B. Remove all abandoned mechanical equipment, electrical conduit, piping and appurtenances which interfere with the installation of the new roofing system. Most items are shown on the Drawing. Coordinate work with the Owner's Representative to ensure electrical services have been disconnected.

C. Disconnect all mechanical equipment, electrical conduit, piping and appurtenances as required to raise units for roofing installation and to reroute conduits/ piping to configurations shown on Drawing. Reinstall/ reroute conduits/ piping through watertight enclo-

sures as shown on Drawing. All existing pitch pans shall be eliminated and the use of new pitch pans is not permitted. Coordinate shut-down work with the Owner's Representative to ensure electrical services have been disconnected. Cover any holes and openings left in deck per Sections 05 31 00 and 07 52 00. Reconnect equipment when flashing installation is completed.

D. If unanticipated mechanical, electrical, or structural elements that conflict with intended function or design are encountered, investigate and measure both nature and extent of the conflict. Submit an accurately detailed report to the Owner's Representative and Engineer in writing. Pending receipt of directive from Owner, rearrange selective demolition schedule as necessary to continue overall job progress without undue delay.

E. Remove from building site debris, rubbish, and other materials resulting from demolition operations. Transport and legally dispose of off site.

F. Upon completion of demolition work, remove tools, equipment, and demolished materials from site. Remove protections and leave interior areas broom clean.

G. Repair demolition performed in excess of that required to Owner's satisfaction. Return elements of construction and surfaces to remain to match condition existing prior to start of operations. Repair adjacent construction or surfaces soiled or damaged by selective demolition work.

H. Notify the Owner if hazardous materials are uncovered while performing demolition work

I. Removed and Salvaged Items:
   1. Clean salvaged items.
   2. Transport items to Government's on-site storage area.
   3. Protect items from damage during transport and storage.

J. Removed and Reinstalled Items:
   1. Clean and repair items to functional condition adequate for intended reuse. Paint equipment to match new equipment.
   2. Pack or crate items after cleaning and repairing. Identify contents of containers.
   3. Protect items from damage during transport and storage.
   4. Reinstall items in locations indicated. Comply with installation requirements for new materials and equipment. Provide connections, supports, and miscellaneous materials necessary to make item functional for use indicated.

K. Existing Items to Remain: Protect construction indicated to remain against damage and soiling during selective demolition. When permitted by Government, items may be removed to a suitable, protected storage location during selective demolition and cleaned and reinstalled in their original locations after selective demolition operations are complete.

3.05 SELECTIVE DEMOLITION PROCEDURES FOR SPECIFIC MATERIALS

A. Roofing: See Drawings for description and extent of demolition of existing roofing system and components.
   1. Remove no more existing roofing than can be covered in one day by new roofing and so that building interior remains watertight and weathertight.
   2. Remove existing roofing membranes, insulation, flashings, copings, counterflashings, gravel stops, drip edges, and roof accessories.
   3. Remove existing roofing systems down to concrete and gypsum roof decks.
   4. Remove roof drain bodies.
   5. Schedule and sequence demolition of roofing systems and flashings so that the specified replacement roofing systems and flashings can be installed within the

same day as demolition or sooner if rain is expected. Provide temporary weather protection during interval between demolition and installation of new construction to ensure that no water leakage or damage occurs to structure or interior areas of existing building.

6. On flat roof areas, seal tie-in between existing and new roofing with positive watertight seal that is capable of resisting ponding water to 2 inch or maximum depth possible due to tear-off sequence. Where practical, raise edge of existing roofing above height required to prevent water from flowing into insulation or building.
7. Remove and reinstall wall panels from masonry walls as needed to make modifications to the base of panel.

B. Rooftop Mechanical Equipment: Remove equipment without releasing refrigerants.

C. Remove all electrical conduit, piping and appurtenances which interfere with the installation of the new roofing and coating systems. Coordinate work with the Owner's Representative to ensure services have been maintained by new service prior to demolition of existing services. Patch all fastener holes and openings in steel decks.

D. Use removal methods to prevent damage to roof deck during tear off operations. Contractor shall repair, at no additional cost to Frederick County Public Schools, unsound decking which the Owner's Representative or Engineer determines was damaged due to tearoff operations.

3.06 SCUPPER OPENINGS

A. Remove existing sheet metal overflow scuppers.

B. Remove any adjacent existing half or cut brick units from existing scupper opening. Patch, repair and close existing scupper opening with salvaged whole brick units. Match mortar joint profile.

C. Remove and salvage brick from new scuppers as indicated on the Drawings. Provide a 12 inch wide by 3 inch height scupper opening.

D. Fabricate sheet metal scupper per Spec Section 07 62 00.

3.07 DUCT STEEL SUPPORTS

A. Trim existing steel angle supports as needed to accommodate raised curb height. Weld new 3 inch by 3 inch by 1/8 inch plate to the bottom of the steel angle support over new curb coping.

3.08 DISPOSAL OF DEMOLISHED MATERIALS

A. General: Except for items or materials indicated to be reused, salvaged, reinstalled, or otherwise indicated to remain the Government's property, remove demolished materials from Project site and legally dispose of them in an EPA-approved landfill.

1. Do not allow demolished materials to accumulate on-site.
2. Remove and transport debris in a manner that will prevent spillage on adjacent surfaces and areas.
3. Remove debris from elevated portions of building by chute, hoist, or other device that will convey debris to grade level in a controlled descent.

B. Burning: Do not burn demolished materials.

C. Disposal: Transport demolished materials off Owner's property and legally dispose of them.

3.09 CLEANING

A. Clean adjacent structures and improvements of dust, dirt, and debris caused by selective demolition operations. Return adjacent areas to condition existing before selective demolition operations began.

3.10 SELECTIVE DEMOLITION SCHEDULE – ROOFING

A. Existing Items to Be Removed:
   1. Built-up roofing membranes, roof drains, base flashings and insulation.
   2. Sheet metal flashing and trim.

B. Existing Items to Be Removed and Reinstalled:
   1. Exhaust fans and metal curbs including disconnection and re-connection of all power and linesets as required. Re-install all fasteners.

END OF SECTION

PART 1 GENERAL

1.01 SECTION INCLUDES

A. Preparation and submittal.

B. Time and schedule of submittals.

C. Warranty Requirements.

1.02 RELATED SECTIONS

A. Section 00 01 00 - Invitation to Bid - Instructions to Bidders: Bid Bonds.

B. Section 00 31 00 - AIA A201-2017 - General Conditions: Performance Bond and Labor and Material Payment Bonds, Warranty, and Correction of Work.

C. Section 01 70 00 - Contract Closeout: Contract closeout procedures.

D. Individual Specifications Sections: Warranties required for specific products or Work.

1.03 FORM OF SUBMITTALS

A. Bind in commercial quality, 8-1/2 x 11 inch, Clear Vue with three-“D”-ring side binders with hardback, cleanable, plastic covers.

B. Label cover of each binder with typed or printed title WARRANTIES AND BONDS, with title of Project; Project numbers; name, address and telephone number of Contractor and equipment supplier; and name of responsible principal, Architect and Mechanical/ Electrical Engineer.

C. Table of Contents: Neatly typed, in the sequence of the Table of Contents of the Project Manual, with each item identified with the number and title of the specification Section in which specified, and the name of the product or work item.

D. Directory: Provide directory identifying all firms, their project managers, addresses and telephone numbers.

E. Separate each warranty or bond with index tab sheets keyed to the Table of Contents listing. Provide full information, using separate typed sheets as necessary. List Subcontractor, supplier, and manufacturer, with name, address, and telephone number of responsible principal.

1.04 PREPARATION OF SUBMITTALS

A. Obtain warranties and bonds, executed in duplicate by responsible Subcontractors, suppliers, and manufacturers, within ten days after completion of the applicable item or work. Except for items put into use with Owner's permission, leave date of beginning of time of warranty until the Date of Substantial Completion is determined.

B. Verify that documents are in proper form, contain full information, and are notarized.

C. Co-execute submittals when required.

D. Retain warranties and bonds until time specified for submittal.

1.05 TIME OF SUBMITTALS

A. For equipment or component parts of equipment put into service during construction with Owner's permission, submit documents within ten days after acceptance.

B. Make other submittals within ten (10) days after Date of Substantial Completion, prior to final Application for Payment.

C. For items of Work when acceptance is delayed beyond Date of Substantial Completion, submit within ten days after acceptance, listing the date of acceptance as the beginning of the warranty period.

1.06 WARRANTY

A. Built-up Roof System: After review and acceptance of the Notice to Award and the submission of all required documents to the manufacturer for the roof system application by a registered applicator, a satisfactorily complete Final Inspection performed by the Owner or Owner's Representative, inspection and acceptance of the roof by the manufacturer, and payment of all invoices and the discharge of all other financial obligations occasioned by or arising out of the course of this work according to the Contract, submit to the Owner the roof system manufacturer's non-deductible Twenty Five (25) Year Total Roof System Warranty with a no-dollar limit (NDL) for the installation covering materials inclusive of the roofing membrane, base flashing, base sheets, insulation and insulation fasteners and Workmanship.
   1. Provide to the Owner and pay for such Warranty as a part of the Roof Replacement Contract.
   2. The warranty shall be issued by the manufacturer of the roof membrane or other entity as approved by the Owner.
   3. Request a Final Inspection by the manufacturer within seven days after the completion of the Work.

B. Guarantee:
   1. Manufacturer's standard Twenty-Five (25) year No Dollar Limit Quality Assistance total system warranty.
      a. Manufacturer will warrant all materials installed. No exclusions.
   2. Roof manufacturer shall provide an inspector on site at intervals during actual performance of roof replacement as noted per Section 01 10 00, Article 1.03.B.5.
   3. Other warranties as noted per specification section.
   4. Wall panels to have Thirty (30) year finish warranty only.

C. Contractor Guarantee: Provide written (notarized) 2-year labor and material workmanship guarantee listed hereinafter and identified as "Warranty of Installing Contractor" for all work inclusive of the roof system, plumbing, sheet metal, masonry, and carpentry work to the Owner within seven (7) calendar days after the Final Completion.

1.07 DEMONSTRATIONS AND TRAINING

A. Provide required demonstrations and training as specified in individual sections.

PART 2 PRODUCTS

Not Used

PART 3 EXECUTION

Not Used

END OF SECTION

DIVISION 2

SITE WORK

BUSHEY FEIGHT MORIN ARCHITECTS INC.
473 NORTH POTOMAC STREET
HAGERSTOWN, MARYLAND 21740
301-733-5600 FAX: 301-733-5612

PART 1 GENERAL

1.01 SUMMARY

A. Section Includes:
   1. Demolishing designated building equipment and fixtures.
   2. Demolishing designated construction.
   3. Cutting and alterations for completion of the Work.
   4. Removing designated items for reuse and Owner's retention.
   5. Protecting items designated to remain.
   6. Removing demolished materials.

B. Related Sections:
   1. Section 01 04 50 – Cutting and Patching.
   2. Section 01 50 00 – Construction Facilities & Temporary Controls.
   3. Section 01 73 20 – Selective Demolition.

1.02 SUBMITTALS

A. Section 01 33 00 - Submittal Procedures: Requirements for submittals.

B. Demolition Schedule: Indicate overall schedule and interruptions required for utility and building services.

C. Shop Drawings:
   1. Indicate location of items designated for reuse and Owner's retention.
   2. Indicate location and construction of temporary work.

1.03 CLOSEOUT SUBMITTALS

A. Section 01 70 00 - Execution Requirements: Requirements for submittals.

B. Project Record Documents: Accurately record actual locations of capped utilities, concealed utilities discovered during demolition, and subsurface obstructions.

C. Operation and Maintenance Data: Submit description of system, inspection data, and parts lists.

1.04 QUALITY ASSURANCE

A. Conform to applicable codes for demolition work, dust control, products requiring electrical disconnection and re-connection.

B. Conform to applicable codes for procedures when hazardous or contaminated materials are discovered.

C. Obtain required permits from authorities having jurisdiction.

D. Perform Work in accordance with State of Maryland standard.

1.05 PRE-INSTALLATION MEETINGS

A. Section 01 03 90 – Coordination and Meetings: Pre-installation meeting.

B. Convene minimum one week prior to commencing work of this section.

1.06 SEQUENCING

A. Section 01 01 00 – Summary of Work: Requirements for sequencing.

B. Sequence demolition activities in accordance with the proposed project phasing.

C. Owner will conduct salvage operations before demolition begins to remove materials Owner chooses to retain.

D. Effectively cover and protect all remaining equipment and furnishings for the duration of the work. Maintain the protection as required by the Owner.

1.07 SCHEDULING

A. Section 01 04 10 – Project Coordination: Requirements for scheduling.

B. Schedule Work to coincide with phasing.

C. Cooperate with Owner in scheduling noisy operations and waste removal that may impact Owners operation in adjoining spaces.

D. Perform noisy, malodorous, dusty work in accordance with the local entity having jurisdiction per their ordinance or regulations:
1. Between hours of 6:00 AM to 10:00 PM Monday thru Saturday.

E. Coordinate utility and building service interruptions with Owner.
1. Do not disable or disrupt building fire or life safety systems without three days prior written notice to Owner.
2. Schedule tie-ins to existing systems to minimize disruption.
3. Coordinate Work to ensure fire sprinklers, fire alarms, smoke detectors, emergency lighting, exit signs and other life safety systems remain in full operation in occupied areas.

1.08 PROJECT CONDITIONS

A. Conduct demolition to minimize interference with adjacent and occupied building areas.

B. Cease operations immediately if structure appears to be in danger and notify Architect/Engineer. Do not resume operations until directed.

PART 2 PRODUCTS

Not Used

PART 3 EXECUTION

3.01 PREPARATION

A. Notify affected utility companies before starting work and comply with their requirements.

B. Mark location and termination of utilities.

C. Erect, and maintain temporary barriers and security devices at locations indicated, including warning signs and lights, and similar measures, for protection of the public, Owner, and existing improvements indicated to remain.

D. Erect and maintain weatherproof closures for exterior openings.

E. Erect and maintain temporary partitions to prevent spread of dust, odors, and noise to permit continued Owner occupancy.

F. Prevent movement of structure; provide temporary bracing and shoring required to ensure safety of existing structure.

G. Provide appropriate temporary signage including signage for exit or building egress.

H. Do not close or obstruct building egress path.

I. Do not disable or disrupt building fire or life safety systems without 3 days prior written notice to Owner.

3.02 SALVAGE REQUIREMENTS

A. Owner has first rights of refusal for all equipment and materials.

B. Coordinate with Owner to identify building components and equipment required to be removed and delivered to Owner.

C. Tag components and equipment Owner designates for salvage.

D. Protect designated salvage items from demolition operations until items can be removed.

E. Carefully remove building components and equipment indicated to be salvaged.

F. Disassemble as required to permit removal from building.

G. Package small and loose parts to avoid loss.

H. Mark equipment and packaged parts to permit identification and consolidation of components of each salvaged item.

I. Prepare assembly instructions consistent with disassembled parts. Package assembly instructions in protective envelope and securely attach to each disassembled salvaged item.

J. Deliver salvaged items to Owner. Obtain signed receipt from Owner.

3.03 DEMOLITION

A. Conduct demolition to minimize interference with adjacent and occupied building areas.

B. Maintain protected egress from and access to adjacent existing buildings at all times.

C. Do not close or obstruct roadways and sidewalks without permits.

D. Cease operations immediately when structure appears to be in danger and notify Architect/Engineer and Owner.

E. Disconnect and remove designated utilities within demolition areas.

F. Cap and identify abandoned utilities at termination points when utility is not completely removed. Annotate Record Drawings indicating location and type of service for capped utilities remaining after demolition.

G. Demolish in orderly and careful manner. Protect existing improvements, and supporting structural members.

H. Carefully remove building components indicated to be reused.
   1. Disassemble components as required to permit removal.
   2. Package small and loose parts to avoid loss.
   3. Mark components and packaged parts to permit reinstallation.
   4. Store components, protected from construction operations, until reinstalled.

I. Remove demolished materials from site except where specifically noted otherwise. Do not burn or bury materials on site.

J. Remove materials as Work progresses. Upon completion of Work, leave areas in clean condition.

K. Remove temporary Work.

END OF SECTION

DIVISION 5

METALS

BUSHEY FEIGHT MORIN ARCHITECTS INC.
473 NORTH POTOMAC STREET
HAGERSTOWN, MARYLAND 21740
301-733-5600 FAX: 301-733-5612

PART 1 ─ GENERAL

1.01 SECTION INCLUDES

A. The repair or replacement of deteriorated existing steel roof.

B. Base Bid allowance includes repair and replacement of 100 s.f. of metal deck.

C. Additional quantities to be carried per allowance is 20 s.f. for patching holes.

D. Un-used quantities per Base Bid shall be credited to contract per the Unit Price Allowance.

1.02 RELATED DOCUMENTS

A. Drawings and contract documents, including Section 01 01 00 - Summary of Work, apply to this section.

1.03 RELATED SECTIONS

A. Section 02 22 05 Demolition

B. Section 06 06 00 Rough Carpentry

C. Section 07 22 00 Roof and Deck Insulation

D. Section 07 54 10 - Thermoplastic Polyolefin (TPO) Membrane Roofing

1.04 QUALITY ASSURANCE

A. Codes and Standards: Comply with provisions of the following codes and standards:
   1. American Iron and Steel Institute (AISI), "Specification for the Design of Cold-Formed Steel Structural Members."
   2. American Welding Society (AWS), D1.3 Structural Welding Code - Sheet Steel.
   3. Steel Deck Institute (SDI), Design Manual for Composite Decks, Form Decks and Roof Decks.
   4. ASTM - American Society for Testing and Materials, West Conshohocken, PA.
   5. SMACNA - Sheet Metal and Air Conditioning Contractors National Association, Chantilly, VA.

B. Qualification of Field Welding: Use qualified welding processes and welding operators in accordance with “Welder Qualification” procedures of AWS.

C. Underwriters' Label: Provide metal roof deck units listed in Underwriters' Laboratories "Fire Resistance Directory", with each deck unit bearing the UL label and marking for specific system detailed.

1.05 SUBMITTALS

A. Product data including manufacturer's specifications and installation instructions for each type of decking and accessories.

B. Provide test data for mechanical fasteners used in lieu of welding for fastening deck to supporting structures.

PART 2 ─ PRODUCTS

2.01 MANUFACTURERS

A. Available Manufacturers: Subject to compliance with requirements, manufacturers offering products that may be incorporated in the work include but are not limited to the following:
   1. Galvanized 22 gage Type -B- steel deck by United Steel Deck (Tel # 908-277-1617) or approved equal. Match existing deck type when possible.

2.02 MATERIALS

A. Steel for Galvanized Metal Deck Units: ASTM A 653-94, grade as required complying with SDI specifications.

B. Miscellaneous Steel Shapes: ASTM A 36.

C. Sheet Metal Accessories: ASTM A 526, commercial quality, galvanized.

D. Galvanizing Repair: Where galvanized surfaces are damaged, prepare surfaces and repair in accordance with procedures specified in ASTM A 780.

E. Flexible Closure Strips: Manufacturer's standard vulcanized, closed-cell, synthetic rubber.

F. Metal roof deck:
1. Gage, rib depth, rib configuration and finish - match existing; three (3) span; lapped and stitched joints.
2. Sheet steel: ASTM A 653/A 653M-97, Grade A structural quality; with G90 coating (galvanized).
3. Butt and finish strips: Twenty (20) gage sheet steel.
4. Acceptable manufacturers:
   a. Consolidated Systems, Inc., Columbia, SC.
   b. Roof Deck, Inc., Hightstown, NJ.
   c. United Steel Deck, Inc., Summit NJ.
   d. Verco Manufacturing Co., Phoenix, AZ.
   e. Vulcraft Division, Nucor Corp., Florence, SC.
   f. Wheeling Corrugating Co., Division Wheeling-Pittsburgh Steel Corp., Wheeling WV.
5. Metal roof deck fasteners: TRAXX by ITW Buildex, Itasca, IL.
6. Deck sidelap stitching: 10-16 x 3/4 inch Hex Washer Head, TRAXX, #1 Drill Point.
7. Deck to bar joist: 12-24 x 7/8 inch Hex Washer Head, TRAXX, #4 Drill Point.
8. Deck to structural steel: 12-24 x 1-1/4 inch Hex Washer Head, TRAXX, #5 Drill Point.
9. Rust inhibitive paint: Rust Inhibitive Metal Primer.

2.03 FABRICATION

A. General: Form deck units in lengths to supports, with flush, telescoped, or nested 2 inch laps at ends and interlocking or nested side laps, of metal thickness, depth, and width as indicated.

B. Roof Deck Units: Provide deck configurations that comply with SDI "Specifications and Commentary for Steel Roof Deck."

C. Metal Closure Strips: Fabricate metal closure strips for openings between decking and other construction, of not less than 0.045-inch min. (18 gage) sheet steel. Form to provide tight-fitting closures at open ends of cells or flutes and sides of decking.

PART 3 ─ EXECUTION

3.01 INSTALLATION

A. General: Install deck units and accessories in accordance with manufacturer's recommendations, shop drawings, and as specified herein.

B. Place deck units on supporting steel framework and adjust to final position with ends accurately aligned and bearing on supporting members before being permanently fastened. Do not stretch or contract side lap interlocks.

C. Place deck units flat and square, secured to adjacent framing without warp or deflection.

D. Coordinate and cooperate with structural steel erector in locating decking bundles to prevent overloading of structural members.

3.02 ROOF DECK REPAIRS

A. Deck re-attachment:
   1. Mechanically reattach loose sections of deck to steel support members 12 inches o.c. (at every other rib) and 6 inches o.c. (at every rib) in roof corner and roof perimeter areas using self-tapping No. 8 or larger machine screws.
      a. Side laps: Mechanically fasten 18 inches o.c.
      b. Mechanically fasten steel deck to supporting member at each deck side lap, regardless of spacing.
      c. Overlap steel deck end laps 2 inches minimum. Mechanically attach at the above listed factors.

B. Deck replacement:
   1. Remove defective metal decking. Examine supports. If unsound, contact WTI superintendent immediately for future action.
   2. Install new metal decking in accordance with SDI, Design Manual for Composite Decks, Form Decks and Roof Decks.

C. Deck protection: Apply rust inhibitive paint over surface rust.

D. Uplift Loading: Install and anchor roof deck units to resist gross uplift loading of 45 psf for all roof areas.

E. Cutting and Fitting: Cut and neatly fit deck units and accessories around other work projecting through or adjacent to the decking, as shown.

F. Reinforcement at Openings: Provide additional metal reinforcement and closure pieces as required for strength, continuity of decking, and support of other work shown.

G. Hanger Slots or Clips: Provide UL-approved punched hanger slots between cells or flutes of lower element where roof deck units are to receive hangers for support of ceiling construction, air ducts, diffusers, or lighting fixtures.

H. Closure Strips: Provide metal closure strips at open, uncovered ends and edges of roof decking and in voids between decking and other construction. Fasten into position to provide a complete decking installation.

I. Touch-Up Painting: After decking installation, wire brush, clean, and paint scarred areas, welds, and rust spots on top and bottom surfaces of decking units and supporting steel members.

J. Touch-up galvanized surfaces with galvanizing repair paint applied in accordance with manufacturer's instructions.

END OF SECTION

PART 1 GENERAL

1.01 SECTION INCLUDES:

A. This section includes the materials and application procedures for the installation the following:
   1. Metal ladders/steps.
   2. Roof hatch (if indicated on drawing).
   3. Provide ladder up posts at roof hatch (if indicated on drawing).
   4. Extension of hatchway ladder due to insulation height increasing (if noted).
   5. Non-penetrating guard rails (if indicated on drawings).

1.02 RELATED DOCUMENTS

A. Drawings and Contract Documents, including Section 01 01 00 – Summary of Work, apply to Work of this Section.

B. Section 09 90 00 Paints and Coatings

1.01 SUBMITTALS

A. Submit under provisions of Section 01 60 00.

B. Shop Drawings: Indicate profiles, sizes, connection attachments, reinforcing, anchorage, size and type of fasteners, and accessories. Include erection drawings, elevations, and details where applicable.

C. Indicate welded connections using standard AWS A2.0 welding symbols. Indicate net weld lengths.

1.02 PERFORMANCE REQUIREMENTS

A. Structural Performance of Ladders: Provide ladders capable of withstanding the effects of loads and stresses within limits and under conditions specified in ANSI A14.3.

1.03 PROJECT CONDITIONS

A. Field Measurements: Verify actual locations of walls and other construction contiguous with metal fabrications by field measurements before fabrication and indicate measurements on Shop Drawings.

B. Provide allowance for trimming and fitting at site.

1.04 QUALITY ASSURANCE

A. Fabricate structural steel members in accordance with AISC "Steel Construction Manual."

B. Comply with Section 10 of AISC "Code of Standard Practice for Steel Buildings and Bridges" for architecturally exposed structural steel.

C. Fabricator: Engage a firm experienced in fabricating structural steel similar to that indicated for this Project and within 15 percent this project size, with a record of successful in-service performance, as well as sufficient production capacity to fabricate structural steel without delaying the Work.
   1. Fabricator must be designated as an AISC-certified plant, Category Sbd.
   2. Contractor Option: Comply with the following procedures instead of engaging an AISC-Certified Plant:
      a. Demonstrate that the fabricator has in place a quality control program for meeting IBC requirements and compliance with AISC recommendations and standards.

b. At no additional cost to the Owner, provide for an independent field inspection of fabrications and welding to comply with IBC, AISC and AWS recommendations and standards.
c. Provide certified shop inspection reports signed by the fabricator and an independent inspection agency indicating that the steel, as fabricated, complies with requirements of Contract Documents.
d. Provide shop drawings signed and sealed by a qualified licensed Structural Engineer, within the project jurisdiction, responsible for design of connections.
e. The steel fabricator shall provide signed and sealed field modification details with backup computations for all field revisions.
f. Field modifications details and computations must be prepared by same licensed Structural Engineer preparing shop drawings.

3. Provide documentation that fabricator has provided material for and erected at least 3 projects within 15 percent of project size and complexity, in the last 6 years.

D. Erector: Company specializing in performing the work of this section with minimum 5 years of documented experience.

E. Design connections not detailed on the drawings under direct supervision of a Professional Structural Engineer experienced in design of this work and licensed in the State of Maryland

1.05 COORDINATION

A. Coordinate installation of anchorages for metal fabrications. Furnish setting drawings, templates, and directions for installing anchorages, including sleeves, concrete inserts, anchor bolts, and items with integral anchors, that are to be embedded in concrete or masonry. Deliver such items to Project site in time for installation.

PART 2 PRODUCTS

2.01 MANUFACTURERS

A. Available Products: Subject to compliance with requirements, products that may be incorporated into the Work include, but are not limited to, products specified.

B. Products: Subject to compliance with requirements, provide one of the products specified.

C. Available Manufacturers: Subject to compliance with requirements, manufacturers offering products that may be incorporated into the Work include, but are not limited to, manufacturers specified.

D. Manufacturers: Subject to compliance with requirements, provide products by one of the manufacturers specified.

2.02 METALS - GENERAL

A. Metal Surfaces, General: Provide materials with smooth, flat surfaces, unless otherwise indicated. For metal fabrications exposed to view in the completed Work, provide materials without seam marks, roller marks, rolled trade names, or blemishes.

2.03 FASTENERS

A. General: Unless otherwise indicated, provide Type 304 or 316 stainless-steel fasteners for exterior use and zinc-plated fasteners with coating complying with ASTM B 633, Class Fe/Zn 5, at exterior walls. Provide stainless-steel fasteners for fastening aluminum. Select fasteners for type, grade, and class required.

B. Steel Bolts and Nuts: Regular hexagon-head bolts, ASTM A 307, Grade A; with hex nuts, ASTM A 563; and, where indicated, flat washers.

C. Stainless-Steel Bolts and Nuts: Regular hexagon-head annealed stainless-steel bolts, nuts and, where indicated, flat washers; ASTM F 593 for bolts and ASTM F 594 for nuts.

D. Anchor Bolts: ASTM F 1554, Grade 36.

E. Cast-in-Place Anchors in Concrete: Anchors capable of sustaining, without failure, a load equal to four times the load imposed, as determined by testing according to ASTM E 488, conducted by a qualified independent testing agency.

F. Expansion Anchors: Anchor bolt and sleeve assembly with capability to sustain, without failure, a load equal to six times the load imposed when installed in unit masonry and four times the load imposed when installed in concrete, as determined by testing according to ASTM E 488, conducted by a qualified independent testing agency.

2.04 MISCELLANEOUS MATERIALS

A. Welding Rods and Bare Electrodes: Select according to AWS specifications for metal alloy welded.

B. Universal Shop Primer: Fast-curing, lead- and chromate-free, universal modified-alkyd primer complying with MPI#79.

C. Zinc-Rich Primer: Complying with SSPC-Paint 20 or SSPC-Paint 29 and compatible with topcoat.
1. Products:
   a. Benjamin Moore & Co.; Epoxy Zinc-Rich Primer CM18/19.
   b. Carboline Company; Carbozinc 621.
   c. ICI Devoe Coatings; Catha-Coat 313.
   d. International Coatings Limited; Interzinc 315 Epoxy Zinc-Rich Primer.
   e. PPG Architectural Finishes, Inc.; Aquapon Zinc-Rich Primer 97-670.
   f. Sherwin-Williams Company (The); Corothane I GalvaPac Zinc Primer.
   g. Approved equal by Owner.

D. Galvanizing Repair Paint: High-zinc-dust-content paint for re-galvanizing welds in steel, complying with SSPC-Paint 20.

E. Bituminous Paint: Cold-applied asphalt emulsion complying with ASTM D 1187.

F. Non-shrink, Metallic Grout: Factory-packaged, ferrous-aggregate grout complying with ASTM C 1107, specifically recommended by manufacturer for heavy-duty loading applications.

G. Non-shrink, Nonmetallic Grout: Factory-packaged, non-staining, non-corrosive, nongaseous grout complying with ASTM C 1107. Provide grout specifically recommended by manufacturer for interior and exterior applications.

H. Ladder-Up Post: Equal to Bilco Model (LU-2). Ladder-Up post-steel, hot dipped galvanized.

2.05 MISCELLANEOUS FRAMING AND SUPPORTS

A. General: Provide steel framing and supports not specified in other Sections as needed to complete the Work.

B. Fabricate units from steel shapes, plates, and bars of welded construction, unless otherwise indicated. Fabricate to sizes, shapes, and profiles indicated and as necessary to receive adjacent construction retained by framing and supports. Cut, drill, and tap units to receive hardware, hangers, and similar items.

2.06 ROOF HATCH (if noted to be provided per drawings)

A. Equal to Bilco type GS-50 with Ladder-Up Safety Post (LU-2) 3’-0” x 2’-6”; insulated curb, fully welded corners, polycarbonate dome, EPDM rubber gasketing, cap flashing, compression spring of anticorrosive material, all other hardware zinc plated and chromate sealed.

2.07 METAL LADDERS

A. General: Comply with ANSI A14.3, unless otherwise indicated.

B. Ladders: (If shown to be provided per drawings)
1. Side-rails: Continuous,1-1/2" dia. Max. pipe or tube as detailed on drawings.
2. Rungs:
a. Bar Dimensions;
1) 3/4-inch to 1-inch diameter
2) 3/4-inch to 1-inch square
b. Fit rungs in centerline of side rails; plug-weld and grind smooth on outer rail faces.
c. Provide non-slip surfaces on top of each rung by coating with abrasive material metallically bonded to rung by a proprietary process.
d. Products:
1) IKG Industries, a Harsco company; Mebac.
2) W. S. Molnar Company; SlipNOT.
3) Approved equal by Owner.
e. Prime exterior ladders, including brackets and fasteners, with zinc-rich primer.
f. Ladder can be constructed as steel with epoxy paint, galvanized steel with zinc rich primer/paint or aluminum.

C. Metal Steps: (If shown to be provided per the drawings.)
1. Equal to McNichols safety tread, 36" wide, min 9" tread depth with galvanized channels strangles with galvanized angle support and bracing. Min 1 ¼" Ø galvanized steel handrails (min one side); max tread height is 7". Heights vary, confirm in field..

D. Extension of Hatch Ladder: Extend ladder to match. Provide proper clearances as required/. Replace or provide new brackets.

2.08 METAL GUARD RAIL SYSTEM – (NON-PENETRATING)

A. Equal to Safety Rail Company (SRC) roof edge protection: Freestanding egress barrier system SRC 360 mobile safety rail. Must meet OSHA Requirements 1910.29(b) and 1926.502(b)
1. Middle and top rails to resist 200 lb force minimum in any direction to all components.
2. 42" high, minimum 1-5/8" O.D. x .0615 W hot rolled, pickled, welded, steel tubing, without sharp edges.
3. Mounting base – min. 90 lb weighted base, galvanized or cast with four (4) post receiver with rubber pads on bottom. (Set on walkpads). Max spacing of 8 ft on center. Must set on smooth surface and sound substrate.
4. Receiver posts with positive locking to base (mechanical attachment).
5. Toe rails to be provided.
6. Provide all accessories as needed including splice connectors, outriggers, return end extensions, wall brackets, etc…
7. All components finish painted in Safety Yellow.

2.09 FABRICATION, GENERAL

A. Shop Assembly: Preassemble items in the shop to greatest extent possible. Disassemble units only as necessary for shipping and handling limitations. Use connections that maintain structural value of joined pieces. Clearly mark units for reassembly and coordinated installation.

B. Cut, drill, and punch metals cleanly and accurately. Remove burrs and ease edges to a radius of approximately 1/32 inch, unless otherwise indicated. Remove sharp or rough areas on exposed surfaces.

C. Form bent-metal corners to smallest radius possible without causing grain separation or otherwise impairing work.

D. Form exposed work true to line and level with accurate angles and surfaces and straight edges.

E. Weld corners and seams continuously to comply with the following:

1. Use materials and methods that minimize distortion and develop strength and corrosion resistance of base metals.
2. Obtain fusion without undercut or overlap.
3. Remove welding flux immediately.
4. At exposed connections, finish exposed welds and surfaces smooth and blended so no roughness shows after finishing and contour of welded surface matches that of adjacent surface.

F. Form exposed connections with hairline joints, flush and smooth, using concealed fasteners where possible. Where exposed fasteners are required, use Phillips flat-head (countersunk) screws or bolts, unless otherwise indicated. Locate joints where least conspicuous.

G. Fabricate seams and other connections that will be exposed to weather in a manner to exclude water. Provide weep holes where water may accumulate.

H. Cut, reinforce, drill, and tap metal fabrications as indicated to receive finish hardware, screws, and similar items.

I. Provide for anchorage of type indicated; coordinate with supporting structure. Space anchoring devices to secure metal fabrications rigidly in place and to support indicated loads.

2.10 FINISHES, GENERAL

A. Comply with NAAMM's "Metal Finishes Manual for Architectural and Metal Products" for recommendations for applying and designating finishes.

B. Finish metal fabrications after assembly.

2.11 STEEL AND IRON FINISHES

A. Preparation for Shop Priming: Prepare uncoated ferrous-metal surfaces to comply with minimum requirements indicated below for SSPC surface preparation specifications and environmental exposure conditions of installed metal fabrications:
1. Exteriors Items Indicated to Receive Zinc-Rich Primer: SSPC-SP 6/NACE No. 3, "Commercial Blast Cleaning."

B. Shop Priming: Apply shop primer to uncoated surfaces of metal fabrications, except those with galvanized finishes and those to be embedded in concrete, sprayed-on fireproofing, or masonry, unless otherwise indicated. Comply with SSPC-PA 1, "Paint Application Specification No. 1: Shop, Field, and Maintenance Painting of Steel," for shop painting.

PART 3 EXECUTION

3.01 INSTALLATION, GENERAL

A. Cutting, Fitting, and Placement: Perform cutting, drilling, and fitting required for installing metal fabrications. Set metal fabrications accurately in location, alignment, and elevation; with edges and surfaces level, plumb, true, and free of rack; and measured from established lines and levels.

B. Fit exposed connections accurately together to form hairline joints. Weld connections that are not to be left as exposed joints but cannot be shop welded because of shipping size limitations. Do not weld, cut, or abrade surfaces of exterior units that have been hot-dip galvanized after fabrication and are for bolted or screwed field connections.

C. Field Welding: Comply with the following requirements:
1. Use materials and methods that minimize distortion and develop strength and corrosion resistance of base metals.
2. Obtain fusion without undercut or overlap.
3. Remove welding flux immediately.
4. At exposed connections, finish exposed welds and surfaces smooth and blended so no roughness shows after finishing and contour of welded surface matches that of adjacent surface.

D. Fastening to In-Place Construction: Provide anchorage devices and fasteners where metal fabrications are required to be fastened to in-place construction. Provide threaded fasteners for use with concrete and masonry inserts, toggle bolts, through bolts, lag bolts, wood screws, and other connectors.

E. Provide temporary bracing or anchors in formwork for items that are to be built into concrete, masonry, or similar construction.

3.02 INSTALLING MISCELLANEOUS FRAMING AND SUPPORTS

A. General: Install framing and supports to comply with requirements of items being supported, including manufacturers' written instructions and requirements indicated on Shop Drawings.

B. Anchor supports for operable partitions securely to and rigidly brace from building structure.

C. Support steel girders on solid grouted masonry, concrete or steel pipe columns. Secure girders with anchor bolts embedded in grouted masonry or concrete or with bolts through top plates of pipe columns.

3.03 ADJUSTING AND CLEANING

A. Touchup Painting: Immediately after erection, clean field welds, bolted connections, and abraded areas. Paint uncoated and abraded areas with the same material as used for shop painting to comply with SSPC-PA 1 for touching up shop-painted surfaces.

END OF SECTION

DIVISION 6

WOOD AND PLASTIC

BUSHEY FEIGHT MORIN ARCHITECTS INC.
473 NORTH POTOMAC STREET
HAGERSTOWN, MARYLAND 21740
301-733-5600 FAX: 301-733-5612

PART 1 ─ GENERAL

1.01 SUMMARY

A. This section includes the materials and installation procedures for assemblies fabricated from wood.

B. Base Bid includes all blocking needed to increase roof edge and curb heights due to new insulation thicknesses. Unit quantities cost to be used for miscellaneous repairs of existing unforeseen conditions for replacement of deteriorated or rotten existing blocking.

C. Replacing or adding sheathing of interior face of parapet walls.

D. Provide allowance quantities of 200 l.f. for 2x4, 2x6 and 2x8 per Unit Price Allowance in the Base Bid. Allowance based on 200 lf for each shall be included.

1.02 RELATED DOCUMENTS

A. Drawings and contract documents, including Section 01 01 00 - Summary of Work, apply to this section.

1.03 RELATED SECTIONS

A. Section 07 22 00 - Roof and Deck Insulation

B. Section 07 54 10 - Thermoplastic Polyolefin (TPO) Membrane Roofing

1.04 REFERENCES

A. ALSC (American Lumber Standards Committee) - Softwood Lumber Standards.

B. APA (American Plywood Association).

C. AWPA (American Wood Preservers Association) C1 - All Timber Products Preservative Treatment by Pressure Process.

D. AWPA (American Wood Preservers Association) C20 - Structural Lumber Fire Retardant Treatment by Pressure Process.

E. NFPA (National Forest Products Association).

F. RIS (Redwood Inspection Service).

G. SPIB (Southern Pine Inspection Bureau).

H. WCLIB (West Coast Lumber Inspection Bureau).

I. WWPA (Western Wood Products Association).

1.05 QUALITY ASSURANCE

A. Perform Work in accordance with the following agencies:
   1. Lumber Grading Agency: Certified by ALSC.
   2. Plywood Grading Agency: Certified by APA.

1.06 SUBMITTALS

A. Product Data: In accordance with Section 01 30 00, submit manufacturer's certification for pressure-treated and fire-treated lumber.

B. Materials Safety Data Sheets: In accordance with Section 01 33 00, submit manufacturer's data.

1.07 PERFORMANCE REQUIREMENTS

A. ASTM - American Society for Testing and Materials, West Conshohocken, PA.

B. SIB - Southern Pine Inspection Bureau, Pensacola, FL.

PART 2 ─ PRODUCTS

2.01 MATERIALS

A. Lumber: Southern Pine; No. 2 grade; free from warping and visible decay; pressure-treated with alkaline copper quaternaries (ACQ-C and ACQ-D with carbonate), sodium borates (SBX) and copper azoles (CBA-A and CA-B).

B. Wood blocking: minimum 2 by 4 inch nominal.

C. Sheathing: Equal to Dens-Glass Sheathing ½" thickness.

D. Tapered wood for coping drainage: Western Reds Cedar, rabbeted bevel siding, select knotty, 3/4 inch by 10 inches.

E. Wood cant: 4 by 4 inch cut on bias.

F. Free floating fascia cant: Tapered wood strip.

G. Fasteners:
1. Fasteners and connectors for ACQ or copper azoles pressure treated wood shall be of hot-dipped galvanized steel, stainless steel or fluorocarbon coated (excluding one-half inch diameter or greater steel bolts).
   a. Do not use standard carbon steel, aluminum or electroplated galvanized fasteners.
   b. Fasteners and connectors used together shall be of same of same type.
   c. Hot-dipped galvanized fasteners shall meet or exceed ASTM A153 requirements.
      1) Connectors shall meet or exceed ASTM A653, Class G185 sheet with 1.85 ounces or zinc coating per square foot minimum.
   d. Type 300 Series stainless steel fasteners are required for maximum corrosion resistance, such as below grade and saltwater exposure.
   e. Hot dipped galvanized fasteners are acceptable for above grade applications.
   f. Tremco/Olympic fasteners are recommended for use with treated wood.
      1) Other proprietary (fluorocarbon) coated fasteners are acceptable, but consult the manufacturer for specific information.
2. Wood to wood:
   a. Acceptable manufacturers:
      1) Type 300 Series stainless steel fastener.
      2) Hot-dip galvanized fastener.
      3) Olympic/Olympic No. 12-11 Standard Roofing Fastener, with CR-10 fluorocarbon coating by Tremco.
      4) Approved equal by Owner.
      5) Length:
         a) Use the shortest fastener that will penetrate the wood blocking 1-1/4 inch.
         b) Use the shortest fastener that will penetrate the top of the wood decking a minimum of 1-inch. Fasteners shall not penetrate the underside of wood plank decking.

3. Wood to concrete:
   a. Acceptable manufacturers:
      1) Deckfast #14 screw, by Construction Fasteners, Inc., Wyomissing, PA.
      2) Insul-Fixx #14, by SFS Stadler, Brunswick, OH.
      3) Insul-Tite #14, by Burlington Mfg. Corp., Archbold, OH.
      4) Olympic Fastener #14-10, by Olympic Manufacturing Group, Agawam, MA.
      5) Tapcon -1/4 inch diameter, Phillips flat head anchor, by ITW Buildex, Itasca, IL.
      6) Roofgrip #14-10, by ITW Buildex, Itasca, IL.
      7) Rawl Drive or Rawl Spike, by the Rawlplug Co., Inc., New Rochelle, NY.
      8) Rawl Deck #14 Deck Screw, by the Rawlplug Co., Inc., New Rochelle, NY.
      9) Approved equal by Owner.
   b. Length: Sufficient to provide 1 to 1-1/2 inch embedment.
4. Wood to gypsum, pre-cast plank and cementitious wood fiber decks:
   a. Acceptable manufacturers:
      1) Olympic Fasteners NTB-1H with locking wire barbs.
      2) Approved equal by Owner.
      3) Length: Sufficient to provide 2-inch embedment into deck without penetrating underside of decking.

PART 3 ─ EXECUTION

3.01 INSTALLATION

A. Wood Blocking:
   1. Mechanically attach horizontal blocking to deck. Install fasteners in two (2) rows staggered. Do not exceed 24 inch spacing in any one (1) row. Within 8 feet of outside corners, do not exceed 12 inch spacing in any one (1) row. Offset blocking layers 12 inches, weave corners.
   2. Blocking thickness: Equal to final insulation thickness.
   3. Blocking width: minimum 4 inches nominal and 1/2 inch wider than metal flanges.
   4. Countersink fastener heads.
   5. Wood blocking fastening pattern:

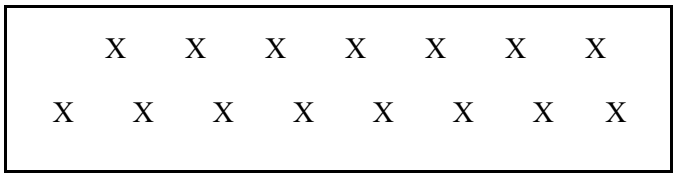

B. Metal Roof Edge:
   1. Replace existing wood blocking and taper strip when defective.
   2. Mechanically attach wood blocking. Offset blocking layers 12 inches; weave corners.
      a. Blocking thickness: Equal to final insulation thickness including tapered edge strips (if required).
      b. Blocking width: 6 inches nominal.
   3. Install tapered wood strip over TremLine fascia deck brackets. Nail two (2) rows at a spacing not to exceed 12 inches from each side of deck brackets. Miter corners.

C. Walls: Mechanically attach wood blocking to flashing base.
   1. Offset blocking layers 12 inches; weave corners.
   2. Blocking thickness: Equal to final insulation thickness including tapered edge (if required).

D. Wood curbs:
   1. Mechanically attach wood blocking to deck at all wood curb locations. Minimum 2 fasteners per section. Offset blocking layers 12 inches, weave corners.
   2. Blocking thickness: Equal to final insulation thickness.
   3. Blocking width: 6 inches nominal.

E. Area Divider / Expansion joint:
   1. Install horizontal and vertical blocking.
      a. Vertical blocking:
         1) Thickness: 2 inches, nominal.
         2) Height: 8 inches above final surface of roofing.
      b. Horizontal blocking:
         1) Thickness: Equal to final insulation thickness, including tapered edge.
         2) Width: 6 inches.
      c. Install and secure preformed 45-degree wood cants. Nail two (2) rows staggered to horizontal and vertical blocking. Spacing in any one (1) row shall not exceed 24 inches (610 mm).

F. At metal sleeve and storm collar:
   1. Mechanically attach wood blocking to deck at all storm collar locations. Minimum 2 fasteners per section.
   2. Offset blocking layers 12 inches, weave corners.
      a. Blocking thickness: Equal to final insulation thickness
      b. Blocking width: 6 inches, nominal.

G. Hot stack pipe detail and collar:
   1. Mechanically attach wood blocking to deck at all hot stack locations minimum 2 fasteners per section.
   2. Mechanically attach flange to wood blocking 3 inches o.c. staggered.
   3. Offset blocking layers 12 inches, weave corners.
      a. Blocking thickness: Equal to final insulation thickness including tapered edge (if required).
      b. Blocking width: 6 inches.
   4. Maintain insulating dead air space at blocking.

H. Penetration pocket locations:
   1. Mechanically attach wood blocking to structural deck at all pitch pan locations; minimum 2 fasteners per section.
   2. Offset blocking layers 12 inches; weave corners.
      a. Blocking thickness: Equal to final insulation thickness including tapered edge (if required).
      b. Width: 6 inches.

I. Parapet Wall Sheathing:
   1. Remove defective or deteriorating sheathing.
   2. Install new sheathing panels of similar thickness and size. Joints centered over framing substrate.

END OF SECTION

DIVISION 7

THERMAL AND MOISTURE CONTROL

BUSHEY FEIGHT MORIN ARCHITECTS INC.
473 NORTH POTOMAC STREET
HAGERSTOWN, MARYLAND 21740
301-733-5600 FAX: 301-733-5612

PART 1 - GENERAL

1.01 SECTION INCLUDES

A. Polyisocyanurate roof board types and applications. Roof section application and layout requirements.

1.02 RELATED DOCUMENTS

A. Drawings and contract documents, including Section 01 01 00 Summary of Work, apply to this section.

1.03 RELATED SECTIONS

A. Section 06 06 00 - Rough Carpentry

B. Section 07 54 10 - Thermoplastic Polyolefin (TPO) Membrane Roofing

1.04 REFERENCES

A. ASTM C 1289 Polyisocyanurate Insulating Board

B. UL Roofing and Materials Directory 2003, Underwriters Laboratories Inc.

C. RIC/TIMA Technical Bulletin 281-1 - Roof Insulation Specimen Conditioning Procedure, The Roof Insulation Committee of the Thermal Insulation Manufacturers Association, Mt. Kisco, NY.

1.05 SUBMITTALS

A. Subcontractor shall provide at Pre-Construction meeting approved insulation samples. Product data sheets shall accompany samples.
   1. Polyisocyanurate
   2. Cover boards
   3. Manufacturer’s tapered insulation plan per roof section

1.06 DELIVERY, STORAGE, AND HANDLING

A. Delivery of Materials:
   1. Deliver materials to job-site in new, dry, unopened and well-marked containers showing product and manufacturers name.
   2. Deliver materials in sufficient quantity to allow continuity of work.
   3. Coordinate delivery with project superintendent.
   4. Do not order project materials or start work before receiving Architect’s written notice to proceed. No work shall commence without signed contracts.
   5. The Shepherd University facilities staff shall not sign any material deliveries.

B. Storage of Materials:
   1. Store rolled goods on ends only. Place materials on pallets. Do not stack pallets.
   2. Store materials marked “KEEP FROM FREEZING” in areas where temperatures will remain above 40 degrees F.
   3. For insulation, remove plastic packaging shrouds. Cover top and sides of all stored materials with tarpaulin (not polyethylene). Secure tarpaulin.
   4. Rooftop storage: Disperse material to avoid concentrated loading.
   5. Do not store materials in open or in contact with ground or roof surface.
   6. Store all materials on a raised platform covered with secured canvas tarpaulin (not polyethylene), top to bottom. Cover all materials when project is not in progress and maintain the ability at all times to cover the materials when required, such as during an unanticipated rain shower.

7. Subcontractor shall assume full responsibility for the protection and safekeeping of products stored on premises.

C. Material handling:
1. Handle materials to avoid bending, tearing, or other damage during transportation and installation.
2. Material handling equipment shall be selected and operated so as not to damage existing construction or applied roofing. Do not operate or situate material handling equipment in location that will hinder smooth flow of vehicular or pedestrian traffic.

1.07 ENVIRONMENTAL REQUIREMENTS

A. Environmental requirements:
1. Do not work in rain, snow, or in presence of water.
2. Do not work in temperatures below 40 degrees F.
3. Do not install materials marked "KEEP FROM FREEZING" when daily temperatures are scheduled to fall below 40 degrees F.

B. Remove any work exposed to freezing.
1. Advise Owner when volatile materials are to be used near air ventilation intakes so that Contractor and Owner coordination some or all of the following methods can be used to minimize disruptions to building occupants and operations:
a. Contractor can divert air intake from work area by attaching scoops or temporary ductwork.
b. Temporarily shut down (Owner) or block air intakes (Contractor).

PART 2 - PRODUCTS

2.01 GENERAL

A. Comply with quality control, references, specifications, and manufacturer's data. Products containing asbestos are prohibited on this project. Use only asbestos-free products.

B. Use products with personal protection. User must read container label and material safety data sheets prior to use.

2.02 ACCEPTABLE MANUFACTURERS

A. Use only approved Polyisocyanurate board. Acceptable manufacturers include:
1. Trisotech G by Tremco Inc.
2. Hy-Therm AP by Celotex
3. ENERGY-2 by Johns Manville
4. ISO95+GL by Firestone
5. AC Foam-II by Atlas
6. Approved equal by Owner.

B. Use only appoved cover board per roof system manufacturer's requirements. Acceptable manufacturers include:
1. USG Corp.
2. Georgia Pacific.
3. Apporved equal by Owner.

2.03 INSULATION MATERIALS

A. Base, Tapered and Flat Polyisocyanurate Board Insulation:
1. FS HH-I-1972 (1) Class 1, factory-tapered polyisocyanurate.
2. Black, glass fiber reinforced, non-asphaltic facer
3. Dimensions: 4 by 4 feet x minimum 1inch thick. For existing metal decks start at 2 inch minimum.
a. The insulation thickness shall be adjusted as required to meet or exceed the roof insulation systems specified R-Value requirement (R30 avg).

4. Tapered polyisocyanurate insulation will be installed as a 4-way tapered layout or as shown on roof drawing.
5. Provide factory-tapered insulation boards fabricated to the following slopes:
   a. 1/4-inch rise per 12 inch run
   b. At existing deck areas as shown on the plans at 1/8-inch rise per 12 inch run where noted or when existing deck has 1/8-inch slope integral with structure.
6. Provide insulation boards for steep slopes or slope in deck:
   a. 2 layers - 2 inch first layer, and 3 ½ inch second layer of flat stock at slope deck areas.

B. Tapered Polyisocyanurate Saddle and Cricket Insulation Layer:
1. FS HH-I-1972 (1) Class 1, tapered isocyanurate.
2. Black, glass fiber reinforced, non-asphaltic facer
3. Dimensions: 4 by 4 feet.
4. Provide factory-tapered insulation boards fabricated to slope of twice (2 times) the roof system slope, with a minimum of 1/2 inch per foot.

C. Tapered Edge Strips: ASTM C 208, asphalt-coated fiberboard, tapered from 1-5/8 inch to 1/8 inch; dimensions: 12" x 48".

D. Fibered Cant Strips:
1. ASTM C 208-95, asphalt-coated fiberboard, factory fabricated.
2. Dimensions: 4 by 4 inch cut on bias.

E. Cover Board:
1. Equal to Georgia-Pacific: Densdeck roof board fiberglass mat faced gypsum roof board, 1.2 lbs per sf; fiberglass mat surface, R-Value of 0.28; < 10% of weight-water absorption, ASTM E84 and UL 723, Flame spread 0, Smoke developed 0.
2. Dimensions: 4 by 4 feet by 1/4 inch thick.

F. Shingled Roof Area Insulation Board: (Not Applicable) Match existing thickness; equal to Johns Manville Nail/ Board insulation board composed of polyisocyanurate insulation core bonded to 7/16" oriented strand board on one side and universal fiber glass reinforced facer on the other.

G. Insulation Roof Board Adhesive: Low-rise foam insulation adhesive.

H. Insulation Adhesive Primer: Low-VOC, water-based, polymer modified primer.

I. Low-Odor Primer: Low-odor, solvent-based primer

J. Roof insulation accessories: As recommended by insulation manufacturer for intended use and compatible with membrane roofing.

PART 3 - EXECUTION

3.01 EXAMINATION

A. Verify conditions as satisfactory to receive work.

B. Do not begin roofing until all unsatisfactory conditions are corrected. Beginning work constitutes acceptance of conditions.

C. Verify that work of other trades penetrating roof deck or requiring men and equipment to traverse roof deck has been approved by Owner, manufacturer, and roofing subcontractor.

D. Check projections, curbs, and deck for inadequate anchorage, foreign material, moisture, or unevenness that would prevent quality and execution of new roofing system.

3.02 GENERAL WORKMANSHIP

A. All work performed by Contractor shall conform to this specification.

B. The presence and activity of the Manufacturer's Representative, Architect's Representative, and/or Owner's representative shall in no way relieve Contractor of contract responsibilities or duties.

C. Substrate: Free of foreign particles prior to laying roof insulation.

D. Wrapper and packaging materials: Not to be included in roofing system.

E. Insulation: Form continuous insulation joints over decking.

F. Install insulation boards in courses parallel to roof edges.

G. Firmly butt each insulation board to surrounding boards. Do not jam or deform boards.

H. Eliminate open joints and uneven surfaces.
   1. Maximum insulation gap: 1/4 inch.
   2. Fill insulation board joint gaps larger than 1/4 inch with roof insulation.

I. Maximum elevation variation between boards at joints: 1/8 inch.

J. Cut and fit insulation boards where roof deck intersects vertical surfaces. Cut board 1/4 inch from vertical surface.

K. Stagger joints at least 6 inches.

L. Filler size: 18 inches in length or width, minimum.

3.03 PREPARATION

A. Protection:
   1. Contractor shall be responsible for protection of property during course of work. Lawns, shrubbery, paved areas, and building shall be protected from damage. Repair damage and / or clean marred areas at no extra cost to owner.
   2. Provide at site prior to commencing removal of debris, a dumpster or dump truck to be located adjacent to building where directed by owner.
   3. Roofing, flashings, membrane repairs, and insulation shall be installed and sealed in a watertight manner on same day of installation or before arrival of inclement weather.
   4. At start of each work day drains within daily work area shall be plugged. Plugs to be removed at end of each workday or before arrival of inclement weather. Preparation work shall be limited to those areas that can be covered with installed roofing material on same day and before arrival of inclement weather.
   5. Arrange work sequence to avoid use of newly constructed roofing for storage, walking surface, and equipment movement. Move equipment and ground storage areas as work progresses.
   6. Protect building surfaces at set-up areas with tarpaulin. Secure tarpaulin. Remove dumpster from premises when full and empty at approved dumping or refuse area. Deliver empty dumpster to site for further use. Upon job completion, dumpster shall be removed from premises. Spilled or scattered debris shall be cleaned-up immediately. Removed material to be disposed from roof as it accumulates.
   7. At end of each working day, seal removal areas with water stops along edges to prevent water entry.
   8. Provide clean plywood walkways and take other precautions required to prevent tracking of aggregate / debris from existing membrane into new work area where aggregate/debris pieces can be trapped within new roofing membrane. Contractor shall instruct and enforce with installers to ensure that aggregate / debris is not tracked into new work areas on workmen's shoes or equipment wheels. Discovery of entrapped aggregate / debris within new membrane is sufficient cause for its rejection.

B. Surface preparation:
   1. Remove existing roofing and insulation to roof deck.
   2. Clean roof decking of dust, debris, and other substances detrimental to roofing installation according to roofing system manufacturer’s written instructions. Remove sharp projections. Sweep roof deck clean.

3. Install pressure treated wood nailers as required to match new insulation height.
4. Install base sheet prior to insulation application. Refer to Section 07 54 10 and 07 54 50 for application requirements

C. At existing Cementitious Wood Fiber Deck, Wood, Gypsum and Concrete Decks:
1. Self-adhered vapor barrier, prime surface then adhere insulation in low-rise foam insulation adhesive with bead at 4" o.c. to base sheet.

3.04 INSULATION APPLICATION

A. Install new tapered roof insulation system. Comply with built-up roofing manufacturer's written instructions for installing roof insulation.
1. General Requirements:
a. The minimum insulation average R-Value requirement for the project is R-30. The installed insulation thickness shall be adjusted as required to meet or exceed the roof insulation systems specified R-Value requirement min. thickness.
b. Install insulation with long joints of insulation in a continuous straight line with end joints staggered between rows, abutting edges and ends between boards.
c. Fill gaps exceeding 1/4 inch with insulation.
d. Cut and fit insulation within 1/4 inch of nailers, projections, and penetrations.
e. First layer of insulation shall be mechanically attached. Contractor to verify conditions below metal deck. Any damage to conduct electrical, data, communication systems, etc… is the contractor's responsibility. Contractors option to prime deck and adhere insulation to deck.
f. Install insulation system in application of solvent free insulation adhesive with beads at 4" o.c per manufacturer's recommendations. Let adhesive rise.
g. Immediately after placement, walk insulation boards into adhesive to achieve solid contact.
2. At slope in deck areas:
a. Install insulation to achieve R-30 value. Use min. 2 layers, adhere each layer in hot asphalt.
b. Install tapered saddles and crickets as required for proper drainage.
3. Install base tapered polyisocyanurate insulation system.
a. Install tapered polyisocyanurate insulation with 1/4 inch per foot slope except where 1/8 inch per foot slope is shown present in existing deck, or as indicated on drawings.
b. Minimum insulation thickness as required to meet the specified insulation system R-Value requirement.
c. Install 4 by 4 ft. tapered insulation sumps at roof drain locations and 2 by 2 ft tapered insulation sumps at scupper locations (excluding overflow roof drains and scuppers).
4. Install tapered insulation saddles or crickets to promote positive drainage along valley lines between roof drains and scuppers, along walls, at high side of roof curbs and as instructed at Pre-Construction Meeting.
a. Install tapered polyisocyanurate insulation with minimum 1/2-inch per foot slope.
b. Tapered insulation saddle and cricket slope shall equal a minimum of twice the roof slope.
c. Saddle widest width shall equal or exceed 1/3 of the distance between the roof drains or scuppers.
d. Contractor is responsible for the elimination of ponding water along valley lines.
5. Install tapered edge strips where blocking height exceeds insulation height.

B. Install insulation under area of roofing to achieve required thickness. Where overall insulation thickness is 2.7 inches or greater, install two or more layers with joints of each

succeeding layer staggered from joints of previous layer a minimum of 6 inches in each direction.

C. Trim surface of insulation where necessary at roof drains so completed surface is flush and does not restrict flow of water.

D. At metal deck only mechanically fastened and adhered insulation: Install first layer of insulation to deck using mechanical fasteners specifically designed and sized for fastening specified board-type roof insulation to deck second layer to be set in low-rise foam insulation adhesive.
   1. Fasten first layer of insulation according to requirements in FM Approvals' "RoofNav" for specified Windstorm Resistance Classification.
   2. Fasten first layer of insulation to resist uplift pressure at corners, perimeter, and field of roof.

E. Install cover boards over insulation with long joints in continuous straight lines with end joints staggered between rows. Offset joints of insulation below a minimum of 6 inches in each direction. Loosely butt cover boards together and fasten to roof deck. Tape joints if required by roofing manufacturer.
   1. Fasten cover boards according to requirements in FM Approvals' "RoofNav" for specified Windstorm Resistance Classification.
   2. Fasten cover boards to resist uplift pressure at corners, perimeter, and field of roof. Apply low-rise foam insulation adhesive.

END OF SECTION

PART 1 GENERAL

1.01 SUMMARY

A. This section includes the materials and application procedures for a Thermoplastic Polyolefin (TPO) Single Ply Roofing System.

1.02 RELATED DOCUMENTS

A. Drawings and contract documents, including Section 01 01 00 Summary of Work, apply to this section.

1.03 RELATED SECTIONS INCLUDE THE FOLLOWING:

A. Section 05 31 00 - Steel Deck

B. Section 06 06 00 - Rough Carpentry

C. Section 07 22 20 - Roof and Deck Insulation

D. Section 07 62 00 - Sheet Metal Flashing and Trim

1.04 DEFINITIONS

A. Roofing Terminology: Refer to ASTM D 6878 and glossary of NRCA's "The NRCA Roofing and Waterproofing Manual" for definition of terms related to roofing work in this Section.

1.05 PERFORMANCE REQUIREMENTS

A. General: Install a watertight, fully adhered single ply thermoplastic roofing system with compatible components that will not permit the passage of liquid water and will withstand wind loads, thermally induced movement, and exposure to weather.

B. Material Compatibility: Provide roofing materials that are compatible with one another under conditions of service and application required, as demonstrated by roofing manufacturer based on testing and field experience.

C. Roofing System Design: Provide a roofing system that is identical to systems that have been successfully tested by a qualified testing and inspecting agency to resist uplift pressure calculated according to FMG 1-A-90.

1.06 REFERENCES

A. ASTM - American Society for Testing and Materials, West Conshohocken, PA.

B. NRCA - National Roofing Contractors Association, Chicago, IL

C. UL - Underwriter’s Laboratory, Northbrook, IL.

1.07 SUBMITTALS

A. Product Data: For each type of product indicated.

B. Installer Certificates: Signed by roofing system manufacturer certifying that Installer is approved, authorized, or licensed by manufacturer to install roofing system.

C. Warranties: Special warranties specified in this Section.

1.08 QUALITY ASSURANCE

A. Installer Qualifications: A qualified firm that is approved, authorized, or licensed by roofing system manufacturer to install manufacturer's product and that is eligible to receive manufacturer's warranty.

B. Manufacturer Qualifications: A qualified manufacturer that has UL listing for roofing system identical to that used for this Project.

C. Roofing system manufacturer shall provide onsite inspection at intervals noted per Section 01 01 00. A formal report shall be submitted within seven (7) days to Owner/Architect.

D. Source Limitations: Obtain components for roofing system from roofing system manufacturer.

E. Fire-Test-Response Characteristics: Provide roofing materials with the fire-test-response characteristics indicated as determined by testing identical products per test method below by UL, FMG, or another testing and inspecting agency acceptable to authorities having jurisdiction. Materials shall be identified with appropriate markings of applicable testing and inspecting agency.
   1. Exterior Fire-Test Exposure: Class A; ASTM E 108, for application and roof slopes indicated.
   2. Fire-Resistance Ratings: ASTM E 119, for fire-resistance-rated roof assemblies of which roofing system is a part.

F. Pre-installation Conference: Conduct conference at Project site. Comply with requirements in Section 01 03 90 – Coordination and Meetings. Review methods and procedures related to roofing system including, but not limited to, the following:
   1. Meet with Owner, Architect, Owner's insurer if applicable, testing and inspecting agency representative, roofing installer, roofing system manufacturer's representative, deck installer, and installers whose work interfaces with or affects roofing including installers of roof accessories and roof-mounted equipment.
   2. Review methods and procedures related to roofing installation, including manufacturer's written instructions.
   3. Review and finalize construction schedule and verify availability of materials, Installer's personnel, equipment, and facilities needed to make progress and avoid delays.
   4. Examine deck substrate conditions and finishes for compliance with requirements, including flatness and fastening.
   5. Review structural loading limitations of roof deck during and after roofing.
   6. Review base flashings, special roofing details, roof drainage, roof penetrations, equipment curbs, and condition of other construction that will affect roofing system.
   7. Review governing regulations and requirements for insurance and certificates if applicable.
   8. Review temporary protection requirements for roofing system during and after installation.
   9. Review roof observation and repair procedures after roofing installation.

1.09 DELIVERY, STORAGE, AND HANDLING

A. Deliver roofing materials to Project site in original containers with seals unbroken and labeled with manufacturer's name, product brand name and type, date of manufacture, and directions for storage.

B. Store liquid materials in their original undamaged containers in a clean, dry, protected location and within the temperature range required by roofing system manufacturer. Protect stored liquid material from direct sunlight.
   1. Discard and legally dispose of liquid material that cannot be applied within its stated shelf life.

C. Protect roof insulation materials from physical damage and from deterioration by sunlight, moisture, soiling, and other sources. Store in a dry location. Comply with insulation manufacturer's written instructions for handling, storing, and protecting during installation.

D. Handle and store roofing materials and place equipment in a manner to avoid permanent deflection of deck.

1.10 PROJECT CONDITIONS

A. Weather Limitations: Proceed with roofing work only when existing and forecasted weather conditions permit roofing to be installed. Single Ply Systems shall not be installed during periods of precipitation.

B. Applications that involve known, severe exposures require a complete review by the manufacturer before their acceptance. This includes, but is not limited to, unusual building exposure to wind, unusual roof slope, unusual roof use, unusual exposure to contaminants, openings in the structure (greater than 10% of the wall surface), which could be left open in a storm, roofs subject to positive pressure conditions and roofs greater than 45 feet in height. For roofs subject to special job conditions, contact an authorized manufacturer’s agent.

1.11 WARRANTY

A. Section 01 74 00 – Contract Closeout: Requirements for warranties.

B. Special Warranty: Written warranty in which Manufacturer agrees to repair roof installations that fail in materials or workmanship within specified warranty period.
   1. Failures include, but are not limited to, the following:
      a. Membrane failures including rupturing, cracking, or puncturing.
      b. Deterioration of membranes, coatings, metals, metal finishes, and other associated materials beyond normal weathering.
      c. Limit of Warranty Coverage: Not to exceed original purchase price of manufacturer's materials, except that manufacturer may elect to apply the limit amount toward the following:
      d. Purchase of replacement application within the first 5 years following completion of roofing work.
   2. Qualified Installer Requirement: Installer must meet requirements of Quality Assurance Article.
   3. Installation Inspection Requirement: By Roofing Inspector in accordance with requirements of Article 3.11 below. Inspection during installation shall occur at 0, 25, 50, 75, and 100% completion.
   4. Warranty Period: 25 years from date of completion of roofing work.

C. Installer's Warranty: Submit roofing Installer's warranty signed by Installer, covering the Work of this Section and related Sections indicated above, including all components of built-up roofing such as built-up roofing membrane, base flashing, roof insulation, fasteners, cover boards, substrate boards, vapor retarders, roof pavers, and walkway products, for the following warranty period: 2 years from date of Substantial Completion.

PART 2 - PRODUCTS

2.01 MANUFACTURERS

A. Manufacturers: Subject to compliance with requirements, provide products by the following:
   1. Firestone
   2. Johns Manville
   3. Carlisle
   4. Or equal as approved by Owner.

2.02 THERMOPLASTIC ROOF MEMBRANE MATERIALS

A. TPO Field Membrane Sheets:
   1. TPO Elastomeric Sheeting
      a. Flexible thermoplastic polyolefin roofing membrane with polyester weft-inserted reinforcement.
      b. Exceeds the performance requirement of ASTM D 6878.
      c. Surface Color: White or Gray (exposure) (gray underside).
      d. Thickness: 60 mil
   2. Approved equal by Owner.

B. TPO Field Membrane Adhesive:
   1. Cold applied adhesive, elastomeric, asbestos free, Low-VOC TPO bonding adhesive.

C. Vapor Barrier: (N/A)
   1. Self-adhereing vapor barrier, Class 1 vapor retarder, non-slip UV resistant; SBS modified bitumen adhesive, factory laminated to tri-laminate woven, high density polyethylene top surface; equal to Firestone's V-Force Vapor Barrier Membrane.

D. Slip Sheet: (N/A)
   1. Red Rosin paper.

E. Base Sheet: (N/A)
   1. Non-perforated, waterproof asphalt coated, polyster/glass scrim/ glass mat tri-laminate reinforcement coated sheet, meeting astm D 4601, Type II sheet. Asbestos free. Equal to Firestone's MB Base Sheet or as required by system manufacturer.

F. Base Sheet Primer:
   1. As required by system manufacturer. Low-VOC, low odor, spray applied.

G. Provide manufacturer's recommendation flashings and other roof accessories.

2.03 BASE FLASHING MATERIALS

A. Base Flashing Sheets:
   1. TPO Perimeter Sheet.
      a. Flexible thermoplastic polyolefin roofing membrane with polyester weft-inserted reinforcement.
      b. Exceeds the performance requirement of ASTM D 6878.
      c. Surface Color: Match roof membrane
      d. Thickness: 60 mil
   2. Approved equal per Owner.

B. Base Flashing Primer:
   1. Asphalt primer water-based, polymer modified.
   2. Low VOC compliant asphalt primer: Solvent-based asphalt primer.

C. Base Flashing Adhesive:

1. TPO Single Ply Bonding Adhesive: Elastomeric, asbestos free solvent based adhesive.

D. Membrane Coated Metal Flashing:
   1. TPO Coated Metal:
      a. .060 mil thick membrane laminated to 0.023" (minimum) G90, 24gauge, hot dipped galvanized steel with back wash coat of .0001" clear acrylic.
      b. White Sheet Metal Stock
         1) Size: 4’ by 10’ per sheet
   2. Approved equal by Owner.

E. Flashing Accessories: Provide pre-manufactured flashing accessories by system manufacturer.
   1. Cover Strip:
      a. TPO Cover Strip
         1) Reinforced TPO Flashing Membrane
         2) Roll Size: 6” by 108’ by 40 mil thick.
   2. 2-Piece Drain Flashing Membrane:
      a. TPO Flashing Membrane
         1) Unreinforced TPO membrane
         2) Roll Size: 24” by 30” by 55 mil thick.
   3. Vent Pipe Boots:
      a. TPO Prefabricated Flashing Boots
         1) Unreinforced TPO membrane
         2) Pipe Size as required:
            a) Small 1 inch to 4 inches
            b) Large 4 inches to 8 inches
      b. TPO Field Fabricated Boots
         1) TPO Flashing Membrane
         2) Unreinforced TPO membrane
         3) Roll Size: 24” by 30” by 55 mil thick.
   4. Corners:
      a. TPO Prefabricated Universal Corners
         1) Unreinforced TPO membrane
         2) Size: 3-1/2 inches (nominal) to all edges
   5. Drain Sealant:
      a. Waterblock sealant as recommened by system manufacturer.
      b. Urethane sealant as recommened by system manufacturer.
      c. Or approved equal by Owner.

2.04 MEMBRANE FASTENERS AND PLATES

A. All screw type fasteners shall be a minimum #15 shank diameter for membrane securement. Hex head fasteners are not permitted for insulation or membrane securement.

B. Factory coated steel fasteners and metal or plastic plates meeting corrision-resistance provisions in FM 4470; designed for fastening roofing membrane components to substrate, tested by manufactuer for required pull-out strength, and acceptable to roofing system manufacturer.

2.05 ACCESSORY MATERIALS

A. Metal cleaner: Mineral spirits

B. TPO Membrane cleaner: Acetone by others.

C. Termination bar:
   1. Aluminum, with caulk receiver: 1/4 by 1 inch

2. Primer: TremPrime Non-Porous Primer or equal.
3. Caulking: One part urethane caulk.
4. Compressible tape: Teflon tape.

D. Temporary Tie-in Materials.
1. Three ply application of sheeting bond and roof fabric.
2. Foam Pack by others.

E. Pitch Pan Fill:
1. Base fill: ASTM C928-92a, rapid hardening non-shrink grout.
2. Top fill: Two-part polyurethane, two compartment (1:1 ratios), solvent free, low odor urethane sealant, two-color for reliable mixing.

F. Air Seal:
1. Backer Rod by others: Joint backing rod, closed cell polyethylene, non-bleeding neoprene, or butyl.
2. Foam Pack by others.

G. Scuppers:
1. Pre-fabricate assembly with TPO membrane covered metal.

2.06 WALK PADS

A. TPO Walkway Roll:
1. A gray thermoplastic membrane which is comprised of a thermoplastic olefin. TPO Walkway Roll is reinforced with a high strength, wick resistant polyester fabric and has a serrated, slip resistant surface. TPO Walkway Roll shall be asbestos free and exceeds the performance requirements of ASTM D 6878.
2. Roll Size: 3’ by 60’ by 80 mil thick.
3. Color: Gray

PART 3 - EXECUTION

3.01 EXAMINATION

A. Examine substrates, areas, and conditions under which roofing will be applied, with installer present, for compliance with requirements.

B. Verify that roof openings and penetrations are set in place and braced.

C. Verify that roof drains are properly clamped into position.

D. Verify that wood blocking, curbs, and nailers are securely anchored to roof deck at roof penetrations and terminations and match the thickness of insulation required.

3.02 PREPARATION

A. Clean substrate of dust, debris, and other substances detrimental to roofing installation according to roofing system manufacturer’s written instructions. Remove sharp projections.

B. Prevent materials from entering and clogging roof drains and conductors and from spilling or migrating onto surfaces of other construction. Remove roof-drain plugs when no work is taking place or when rain is forecast.

3.03 JOB CONDITIONS

A. Prior to the use of any TPO roofing material, consult Material Safety Data Sheets for applicable cautions and warnings.
   1. Do not use oil or bituminous base roof cement with TPO materials.
   2. Do not install TPO membrane directly in contact with new or resaturated asphalt.
   3. Do not expose membrane or accessories to temperatures of 180°F or above.
   4. Do not allow waste products (petroleum grease, oil or solvents, etc.) or direct steam venting to come in contact with the TPO roofing system. Any exposures not typical for normal roofing installation must be presented to the Roof Manufacturer for assessment of any impact on the performance of the roofing system.
   5. Do not install TPO membrane directly in contact with coal tar roof surfaces.
   6. Install polyethylene vapor barrier ply under new insulation layer when mechanically attached TPO membrane system is installed over existing coal tar roofs.
   7. Ponding conditions will adversely affect performance of the roofing system. Where positive drainage does not exist, water removal from roof surface should be facilitated by lowering drains, and/or installing additional drains, tapered insulation, or an approved lightweight insulating concrete slope system.

3.04 GENERAL INSTALLATION REQUIREMENTS

A. Install thermoplastic roofing membrane system according to roofing system manufacturer's written instructions and applicable recommendations of ARMA/NRCA's "Quality Control Guidelines for the Application of Thermoplastic Roofing".

B. Install roofing system per manufacturer's published specifications manual.

C. Coordinate installation of roofing system components so insulation and roofing plies are not exposed to precipitation or remain exposed at the end of the workday or when rain is forecast.

D. (N/A) At cementitious wood fiber or gypsum concrete deck, provide slip sheet and water proof base sheet nailed, then install self-adhereing vapor barrier membrane.

E. Provide water cutoffs at end of each day's work to cover exposed ply sheets and insulation. Water tightness of the water cutoffs is the Contractor's responsibility.

F. Complete terminations and base flashings and provide temporary seals to prevent water from entering completed sections of roofing system.

G. Remove and discard temporary seals before beginning work on adjoining roofing.

H. Substrate-Joint Penetrations: Prevent adhesive from penetrating substrate joints, entering building, or damaging roofing system components or adjacent building construction.

3.05 INSULATION INSTALLATION

A. Coordinate installing roofing system components so insulation is not exposed to precipitation or left exposed at the end of the workday.

B. Comply with roofing system manufacturer's written instructions for installing roofing insulation.

C. Refer to Section 07 22 00 Roof and Deck Insulation for detailed requirements.

3.06 HOT AIR WELDING EQUIPMENT

A. Manufacturer's TPO seams can only be made by the hot-air welding process. When the membrane is properly fused, the hot-air heat welding process produces seams that are as

strong as the TPO membrane itself. The following information is presented as a guide to assist Contractors in utilizing hot-air heat welding equipment. Prior to actual selection and operation of the hot-air heat welding equipment, refer to the manufacturer's operating instructions. The operation of hot-air heat welding equipment, and the results obtained utilizing this equipment, are the responsibility of the roofing Contractor.

1. Leister Variant Automatic Welder
    a. Power Requirements: 220 volts, 30 amp, 7500 watts single phase.
    b. Power cord and plugs: #10 wire with 3-prong twist plug. #10 wire may be used up to 150' in length. For longer lengths, consult an electrician for line voltage drop.
    c. Element: 4500 Watts
    d. Adjustment Tools: Adjustable wrench, various metric box wrenched, various metric allen wrenches, screwdrivers, 40mm nozzle only.
    e. Additional Weight: A 45lb. Supplemental weight is required for the automatic welder. It shall rest on the aluminum housing over the rear wheels when the welder is being used.
2. Leister "Triac" Hand Welder
    a. Power requirements: 115 volts, 15 amps, and 1800 watts single phase.
    b. Power cord #12. Check with electrician for line voltage drop for length over 200'.
    c. Element: 1600 Watt
    d. Accessories: 40mm nozzle, various silicone and metal rollers.
3. Power Generators
    a. If a power generator is used only for the automatic welder, a minimum of 220 volts, 30 amps and 7500-watts unit is required. If additional items are used such as hand welder, screw guns or other equipment, increased generator capacity is required. A minimum 220 volt, 30 amp and 1000 watts generator is recommended.

3.07 ADHERED TPO ROOF MEMBRANE INSTALLATION

A. Install membrane according to roofing system manufacturer's written instructions, starting at low point of roofing system. Place ply sheets to ensure water will flow over or parallel to, but never against exposed edges. Shingle in direction to shed water.
    1. Install sheet according to ASTM D 5036.
    2. Install air seal where required at perimeter, curbs and penetration flashings.
    3. Manufacturer's TPO membrane shall be fully adhered to properly installed and prepared substrate surface. The surface shall be clean, dry, smooth, and free from contamination.
    4. The roof perimeters and corners may require additional design to develop the necessary resistance for wind conditions in excess of gale force winds. Contact manufacturer for additional information if the building is located where winds may exceed standard warranty conditions or special code provisions are required.
    5. The membrane shall be cut to fit neatly around all penetrations and roof projections.
    6. The roofing membrane shall be unrolled and positioned with a minimum 3-inch overlap. Laps shall be shingled with, or run parallel to, the slope of the roof.

B. TPO Field Membrane Application using TPO Single Ply Bonding Adhesive:
    1. Install (60 mil) Reinforced TPO field membrane sheets.
    2. Install TPO field sheets using TPO Single Ply Bonding Adhesive. Stir the TPO Single Ply Bonding Adhesive thoroughly. Do not thin adhesive with solvents. Apply bonding adhesive to both substrate and membrane surfaces at a rate of 50 to 60 square feet per gallon per side.
    3. Begin field membrane installation at low point of deck. Allow sheet to overhang roof edge a minimum of 1-1/2 inches below lower edge of wood nailer.

4. Position roll of TPO sheeting in a manner, which provides sufficient material to facilitate flashing. The roofing membrane shall be unrolled and positioned square with the roof edge. Laps shall be shingled with, or run parallel to, the slope of the roof. Overlap side laps 3 inches and end laps minimum three (3) inches. Install succeeding rolls in same manner. Avoid wrinkles. Reposition sheet when necessary. Do not stretch material unevenly.

5. Fold sheet back so one-half (1/2) of the underside of the sheet is exposed. Ensure the sheet fold is smooth with no wrinkles or buckles.
6. Over the properly installed and prepared surface, TPO Single Ply Bonding Adhesive shall be applied using approved solvent-resistant roller or power roller equipment. The adhesive shall be applied in a smooth even coating with no globs, puddles, voids or similar irregularities. Only areas that can be completely covered in the same day shall be coated with adhesive. The surface with adhesive coating shall be allowed to become tacky prior to installing the roof membrane. Do not allow adhesive to fully dry prior to placing membranes. If the surface dries to the point that if no longer feels tacky re-apply bonding adhesive to substrate at the specified application rate and allow to flash off again to the proper drying condition.
    a. Drying time of the adhesive increases with the presence of higher humidity or cooler temperatures.
7. Bonding adhesive shall not be applied to lap (seam) areas that are to be welded to flashings or adjacent membrane sheets by means of hot air welding procedures. If contamination occurs, remove any contaminates prior to hot air welding seams.
8. When the surface is ready, roll the TPO membrane onto the adhesive coated substrate avoiding wrinkles.
9. Using a push broom or membrane roller and positive downward pressure, brush down the bonded half of the membrane sheet to achieve maximum contact.
10. Fold back the unbonded half of the sheet and repeat bonding procedure.
11. Apply adjoining sheets in same manner, lapping edges a minimum of 3”.
12. Any wrinkles found in the splice area or that impedes the flow of water drainage, must be cut out, laid flat and repaired using TPO membrane and standard hot air seam welding procedures.
13. Remove and replace all sheets that are not fully bonded.
14. Mechanically attach membrane sheets at roof perimeter and penetrations. Fasteners shall have 2 3/8 inch diameter barbed metal plates. Fasteners shall be placed a minimum of 12 inches on center and 1-1/8 inch from sheet edge in a true and straight.
15. Minimize foot traffic on freshly applied TPO membrane until adhesive is fully cured.
16. Membrane Seaming:
    a. All edge surfaces to be seamed by hot air welding. Surfaces must be wiped with solvent using clean rags.
    b. Heat-weld laps with approved welding equipment. Adjust welding speed and temperature base upon ambient conditions and material.
17. Membrane End Laps:
    a. Continuous End Lap Detail
        1) Overlap the previous membrane course of field membrane a minimum of 2”. Heat weld membrane lap.
    b. Staggered End Lap Detail
        1) Offset staggered end laps a minimum of 5’.
        2) Overlap the previous course of field membrane a minimum of 2”. Heat weld membrane lap.
    c. Abutted End Lap Detail
        1) Gap width between membrane sheets shall not exceed 1/8 inch.

2) Install 6-inch wide cover strip over end lap. Cut cover strip corners round. Heat-weld cover strip centered over end lap.

18. Heat-weld a 4” round field cut TPO flashing membrane (unreinforced) centered over each T-joint on 60-mil thick or greater membrane.

C. Perimeter/Projection Attachment:
1. Mechanically attach roofing membrane at roof perimeters, curbs, and pipe/stack penetrations greater than 12” in diameter, on both sides of expansion joints and other areas where the membrane must be anchored to prevent movement, stress or damage to the roofing membrane.
2. Provide mechanical attachment at deck angle changes in excess of 2”/12” (including drain sump areas).
3. Follow the recommendations of Factory Mutual Loss Prevention Data Sheets 1-28, and 1-29 (dated May 2004 or latest edition).

D. Roof Drain Detail:
1. Prepare substrate around each roof drain to prevent membrane bridging or distortion and to provide a smooth transition from the roof surface to the drain clamping ring.
2. Remove existing flashing and bituminous materials from drain components down to bare clean metal.
3. Install tapered edge strip around drain to create approximate 48 by 48 inch sump. Miter corners.
4. Install minimum 1/2 inch bead of drain sealant over entire drain bowl rim (approximately 1/2 tube per drain).
5. Install 2-piece drain flashing detail.
   a. Terminate field membrane along outside edge of sump. Install target patch consisting of unreinforced TPO flashing membrane over drain sump and past drain bowl rim. Extend flashing a minimum of 3” outside of the sump area and heat weld to field sheet.
6. Clamp flashing collar to drain. Fully compress drain sealant between the new membrane and the drain bowl rim forming a solid seal between the two. Evenly compress the assembly to avoid cracking or breaking the clamping ring. Replace cracked or broken drain clamping rings.
   a. All bolts and/or clamps must be in place in order to provide constant, even compression. Missing drain bolts and clamps shall be replaced.
7. Neatly cut membrane within drain at rim. Membrane to extend 1 inch into bowl.
8. For working drains, remove drain plug upon completion of work each day.
9. Plug new drains to prevent water entry until service connection is completed.

E. Membrane Seaming:
1. Clean seam areas, overlap roofing membrane and hot-air weld side and end laps of roofing membrane according to manufacturer's written instructions to ensure a watertight seam installation.
2. All surfaces shall be clean and dry. Ensure both mating surfaces are free of debris and no moisture is present on the splicing surfaces.
   a. Using a clean rag saturated with appropriate cleaner, thoroughly clean seam area at least 4 inches wide on both sheets. Change rags frequently to avoid depositing previously removed materials.
3. Using an approved automatic heat welding machine or hand held heat gun and steel roller, continuously weld a minimum 1 1/2” wide seam. Minimum width of welded lap shall be 1-1/2 inch when using an automatic welder. Hand welds shall be a minimum of 2-inches wide. Only approved Automatic Walker Welders shall be used to weld seams (see Hot Air Welder Equipment).
4. Special attention must be paid to areas where multiple layers of TPO membrane (3 or more) come together (T-joints).

a. If probing these areas reveals the presence of voids or cold welds on 45 mil membrane, install a 4" round field cut TPO flashing membrane (unreinforced) to the formed T-joint.
b. A 4" round field cut TPO flashing membrane (unreinforced) is required at each T-joint on 60 mil or greater membrane.

5. Allow hot air welder to warm up. Insert the nozzle tip of the hot air welder into seam area. Move nozzle at a steady speed along the seam area, immediately applying pressure behind the air nozzle with a neoprene roller or weighted wheel to ensure positive contact of the heated TPO roof membrane lap.
6. Test lap edges with probe to verify seam weld continuity.
   a. Verify field strength of seams a minimum of twice daily and repair seam sample areas.
   b. All welded seams must be manually checked for voids or seal deficiencies by probing the entire seam area with a dull cotter key extractor after the seam has cooled. Properly constructed laps will not separate at the lap interface when tested. In addition, there must be destructive testing performed at the beginning of every workday and every time there is an interruption in the welding process (i.e. Power failure, welder shut down and job site conditions change). All deficiencies must be repaired.
   c. Repair tears, voids, and lapped seams in roofing membrane that does not meet requirements.

F. TPO Membrane End Lap Details:
1. Continuous End Lap Detail
   a. Abut end laps. Gap width between membrane sheets shall not exceed 1/8 inch.
   b. Install 6-inch wide cover strip membrane centered over end lap. Cut cover strip corners round. Heat-weld cover strip over end lap.
2. Staggered End Lap Detail
   a. Offset staggered end laps a minimum of 5'.
   b. Abut end laps. Gap width between membrane sheets shall not exceed 1/8 inch.
   c. Install 6-inch wide cover strip membrane centered over end lap. Cut cover strip corners round. Heat-weld cover strip over end lap.
3. Heat weld TPO cover strip.
   a. All surfaces must be clean and dry.
   b. For heat welding, allow the hot air welder to warm up. Insert the nozzle tip of the hot air welder into the seam area. Move nozzle at a steady speed along the seam area, immediately applying pressure behind the air nozzle with a neoprene roller or weighted wheel to ensure positive contact of the heated TPO Roof Membrane lap.
   c. Minimum width of all welded lap shall be 1.5"
4. Field test heat welded to assure proper construction. Perform field test after lap area cools to ambient temperatures. Properly constructed laps will not separate at the lap interface when tested.

3.08 GENERAL FLASHING REQUIREMENTS AND STRIPPING INSTALLATION

A. Install sheet flashings and preformed flashing accessories and adhere to substrates according to membrane roofing system manufacturer's written instructions.

B. Clean existing asphalt from vertical surfaces where flashings will be applied. Prime as recommended by system manufacturer. Contractor's option to provide plywood sheathing to cover. Do not cover existing thru wall flashing.

C. Clean seam areas, overlap and firmly roll sheet flashings into the adhesive. Weld side and end laps to ensure a watertight seam installation.

D. All flashings shall be installed as shown on the detail drawings. All TPO membrane flashings shall be installed concurrently with the roof membrane as the project progresses. No temporary flashings shall be allowed without prior written approval of the authorized manufacturer's agent. If any water is allowed to enter under the new roofing due to incomplete flashings, the affected area shall be removed and replaced at Contractor's expense.

E. Flashings shall not be applied over existing thru-wall flashings or weep holes. All flashings shall extend a minimum of 8-inches above roof level unless previously accepted by Owner and an authorized manufacturer's agent. All existing flashings shall be removed before applying a new flashing. Install flashings in a neat and uniform manner with a "rounding" of all exposed corners. Care should be taken to ensure that the flashing does not bridge where there is a change of direction.

F. Flash all pipes with TPO Pre-fabricated Flashing Boots where possible. Field fabricate pipe flashings with TPO Flashing Membrane (unreinforced flashing) per standard Manufacturer's Roofing Systems details when a pre-molded flashing is not feasible.

G. Fabricate all metal flanged flashings using TPO Membrane Coated Metal. Hot air weld a 6-inch wide TPO cover strip to flashing membrane and coated metal flange.

H. Mix adhesive vigorously by hand to achieve a homogeneous blend. DO NOT use electrical equipment or open flame near adhesive. Do not thin adhesive with solvents.

I. Base Flashings Adhered in manufacturer's TPO Single Ply Bonding Adhesive:
   1. Install all new TPO flashing details per manufacturer's specifications, recommendations and standard detail drawings.
      a. Base flashing system shall consist of fully adhered (60 mil) TPO Perimeter Sheet membrane or (60 mil) Reinforced TPO Field membrane and adhered in Single Ply Bonding Adhesive or per manufacturer's requirements.
      b. All flashings shall be installed as shown on the detail drawings and per manufacturer's standards. All membrane flashings shall be installed concurrently with the roof membrane as the project progresses.
      c. Flashings shall not be applied over existing thru-wall flashings or weep holes. All flashings shall extend a minimum of 8-inches above roof level unless previously accepted by Owner and an authorized Tremco agent. All existing flashings shall be removed before applying a new flashing.
      d. Apply TPO Single Ply Bonding Adhesive in full coverage to both the substrate and to the back side of the TPO flashing membrane.
      e. The TPO base flashing membrane shall be fully adhered to a dry, smooth solvent-resistant and compatible substrate using approved bonding adhesive.
      f. When the TPO membrane has been cut to correct width and length, embed the flashing into the substrate adhesive, taking care to avoid wrinkles.
      g. Over properly prepared surface, TPO Single Ply Bonding adhesive shall be applied using approved solvent-resistant roller or power roller equipment.
         1) The adhesive shall be applied at a rate of 1-gallon per every 50 to 60 square feet per side. The adhesive shall be applied in a smooth even coating with no globs, puddles, voids or similar irregularities. Coverage will vary based on substrate porosity.
         2) Allow adhesive to dry to a tacky feel when touched with the back side of a dry finger before bonding membrane to substrate.

Drying time of the adhesive increases with the presence of higher humidity or cooler temperatures.

3) Do not allow adhesive to fully dry prior to placing membranes. If the surface dries to the point that if no longer feels tacky, re-apply bonding adhesive and allow to flash off to the proper drying condition.

h. Position TPO Flashing membrane in intended location and fold back. Apply TPO Single Ply Bonding Adhesive in full coverage to both the vertical substrate and to the back side of the flashing membrane. Allow adhesive to dry to a tacky feel when touched with the back side of a dry finger before bonding membrane to substrate. Place the flashing membrane onto the vertical substrate and pressure roll to assure positive contact. Do not allow TPO Single Ply Bonding Adhesive to contaminate TPO membrane and flashing lap areas. Remove adhesive from lap areas. Heat-weld overlap seams of TPO flashing and field membrane. Bonding adhesive shall not be applied to lap (seam) areas that are to be welded to flashings or adjacent membrane sheets by means of hot air welding procedures. If contamination occurs, remove any contaminates prior to hot air welding seams.

i. Care should be taken to ensure that the flashing does not bridge where there is a change of direction.

j. Apply consistent pressure to entire surface of elastomeric sheeting using a steel hand roller to achieve full adhesion of the sheet to the flashing substrate. Ensure complete bond and continuity without wrinkles or voids.

k. Clean seam areas and weld side and end laps to ensure a watertight seam installation

l. The top of the installed flashing shall be fastened under metal counterflashing, coping cap, or through wall metal reglet. The maximum distance between fasteners for TPO flashings shall be 8 inches through flat bar or 12 inches through metal reglet. Install Flash (TF) Tape between masonry walls and top edge of TPO flashing membrane prior to fastening.

m. Install TPO prefabricated universal corners for sealing all inside and outside corners.

n. Fabricate all metal flashings with flanges using TPO Membrane Coated Metal. Secure flange to wood blocking as specified. Heat-weld a 6-inch wide (reinforced) TPO cover strip to flashing membrane and coated metal flange.

J. TPO Coated Metal Edge Flashing:

1. Fabricate and install manufacturer's TPO coated metal flashing to comply with details and project drawings and the recommendations of SMACNA Sheet Metal Manuals for fabrication and Factory Mutual Loss Prevention Data Sheet I-49.
2. All metal work shall be completed in conjunction with the roofing and flashing operation to provide a daily watertight condition.
3. Metal shall be installed to provide adequate resistance to bending and to allow for normal thermal expansion and contraction. Allow for minimum 1/4 inches space between metal joints.
4. Metal flashing shall have a minimum 3 inches wide nailing flange and hemmed metal edge. Flange shall be no wider than underlying blocking. Metal flashing shall be fastened to solid wood blocking with annular ring nails, 4 inches o.c. Fasteners shall penetrate the wood a minimum of 1-1/4 inches.
5. Continuous metal hook strips are required on all metal fascias that exceed 4 inches. Each hook strip shall be fastened 12 inches o.c. into wood blocking or masonry wall. Hook strips should be continuous and at least 22-gauge. They

should be secured with annular threaded nails long enough to penetrate the wood 1 - 1/4 inches. The nail head should be 3/16 inches minimum. When screws are used, they should be No. 8 minimum long enough to penetrate wood 3/4 inches or metal 3/8 inches. Screws should be 24 inches apart in Zone 1 and 16 inches apart in Zone 2 (refer to FM I-49). Screws should be either corrosion-resistant steel or treated to resist corrosion. When an existing metal panel wall has no hook strip, the fascia metal should be fastened directly to the wall with No. 8 galvanized sheet metal screws, through neoprene washers, spaced 24 inches in Zone 1 and 16 inches in Zone 2.

6. All gravel stops and drip edges with a face larger than 4 inches shall be installed using a continuous 22 gauge hook strip fastened 12 inches o.c. using galvanized annular ring nails.
7. Fasten TPO coated metal flashings 4 inches o.c. to treated wood nailers using galvanized annular ring nails.
8. Install TPO membrane coated metal flashings over field membrane. Flange of flashing component shall be at the same level as the insulation or other substrate to which the membrane will be applied.
9. Install adjacent pieces of coated metal flashing with 1/4 inches gap. Apply a 2 inches wide continuous strip of foil tape over the gap to act as a bond breaker. Hot air weld a 6 inches strip of TPO membrane, over the foil tape, to each piece of flashing to form a watertight splice.
10. Hot air weld a 6-inch wide TPO cover strip to field membrane and coated metal edge flashing.

K. Prefabricated Pipe Boots:
1. Remove existing pipe flashing.
2. Install plates and fasteners that secure field sheet as close to the penetration as possible.
3. Each boot is stepped in increments that will fit standard pipes. The top of the boot should be cut around the “step” which allows a stretch fit between the top of the boot over the stack.
4. Place the boot over the vent pipe.
5. Pull the flange down to the roof, stretching the collar portion around the vent pipe.
6. Inside the top of the boot shall be caulked to prevent water entry and a stainless steel hose clamp must be installed to secure the top edge of the boot to the vent pipe.
7. The flange of the boot is pre-scored and shall be cut at the circular score and then heat-welded (minimum 2") onto the TPO field membrane.
8. Do not split the boot. If the boot cannot be installed intact, use field fabricated flashing per manufacturer’s details.
9. Manufacturer’s vent pipe boots can only be installed by hot-air heat welding.

L. Prefabricated Universal Corners
1. The manufacturer’s TPO prefabricated corners must be used for sealing the corners of all pitch pans, curbs, and walls. They are uniform in shape and size and provide water tightness at corners formed by TPO coated metal and flashing membrane.
2. The corners shall be cut at the scored lines to form either an inside or outside corner.
3. Use per heat welding techniques to fully weld the corner to the flashing following published manufacturer’s specifications and details.
4. Universal Corners can only be installed by hot-air heat welding.

M. TPO Pitch Pans with Grout:
1. Fabricate pitch pan using TPO membrane coated metal. Sides: 4 inches high, hemmed to outside at top edge. Flange: 4 inches wide, completely around

periphery. Rivet all joints. Clearance between projection and pitch pan: 2 inches on all sides. Set flange in sealant.
2. Pack gap between roof-penetrating element and deck with compressible insulation.
3. Nail flange to wood blocking 3 inches o.c., staggered.
4. Strip-in flange with a 6-inch wide TPO cover strip heat welded to field membrane and coated metal edge flashing.
5. Install TPO prefabricated corners.
6. Fill pitch pan to within 1 inch from top with non-shrink grout. Allow to set firm.
7. Fill pitch pan with pourable sealer. Double fill if necessary.
8. Fabricate and install storm collar with drawband over pitch pan. Tighten drawband.
9. Wipe clean top of storm collar and projection with metal cleaner. Prime surface with metal primer.

N. TPO Metal sleeve with Storm Collar:
1. Fabricate sleeve flashing using TPO membrane coated metal. Height: 8 inches. Flange width: 4 inches. Flange to extend completely around flashing periphery. Solder all inside joints.
2. Apply a heavy 3/8 inch bead of sealant to roofing surface receiving metal flange.
3. Nail flange to wood blocking 3 inches o.c., staggered.
4. Strip-in flanges with a 6-inch wide TPO cover strip heat welded to field membrane, and coated metal edge flashing
5. Install TPO prefabricated corners.
6. Fabricate storm collar with bolted connection. Cover sleeve flashing 3 inches minimum. Tighten bolts.
7. Wipe clean top of storm collar and projection with metal cleaner. Prime surface with metal primer. Caulk projection/sheet metal interface. Provide watershed. Tool neatly.

3.09 WALKWAY PAD APPLICATION

A. Install walkway pads at roof access points.

B. Heat weld walkway pad to field membrane.
1. Clean, smooth membrane ply surface with soap and water. Allow drying. All surfaces must be clean and dry prior to walkway application.
2. For heat welding, allow the hot air welder to warm up. Insert the nozzle tip of the hot air welder to the attachment area. Move nozzle at a steady speed, immediately applying pressure behind the air nozzle with a neoprene roller or weighted wheel to ensure positive contact of the TPO Walkway Roll to the roof membrane.
   a. Minimum width of welded lap shall be 2.0” and 6.0” long when performing hand welds.
   b. Spot weld Walkway Roll to roof membrane. Attachment of walkway roll should not impede drainage.
3. Field test heat welded laps to assure proper construction.
4. Perform field test after lap area cools to ambient temperatures. Properly constructed heat welds will not separate at the lap interface when tested.

3.10 DAILY WATERSTOP/TIE-INS

A. Install Tie–in.
1. Remove embedded gravel/debris from top ply of felt along termination if built-up roofing system is present. Width: 24 inches.
2. Remove dirt and debris from tie-in area. Width: 24 inches.
3. Adhere 12 and 18-inch wide ply sheets from exposed deck to existing roofing with a continuous 1/16 thick application of tie-off mastic. Glaze cut-off with surfacing mastic. Extend 18 inch wide felt 3 inches either side 12-inch felt.

4. Install “deadman” insulation filler at insulation staggers.
5. Extend new roofing membrane at least 24 inches onto prepared area of adjacent existing roofing. Seal edge with 6 inches wide reinforcing membrane embedded between alternate courses of tie-off mastic.
6. Remove temporary connection at beginning of next workday by cutting membrane evenly along edge of existing roof system. Remove “deadman” insulation fillers.

B. Alternate Tie-in:
1. Remove embedded gravel/debris from top ply of felt along termination. Width: 24 inches.
2. Remove dirt and debris from tie-in area. With: 24 inches.
3. Adhere 12 and 18-inch wide ply sheets from exposed deck to existing roofing with a continuous 1/16 thick application of tie-off mastic. Glaze cut-off with surfacing mastic. Extend 18-inch wide felt 3 inches either side 12-inch felt.
4. Install “deadman” insulation filler at insulation staggers.
5. Extend new roofing membrane at least 24 inches onto prepared area of adjacent existing roofing.
6. Attach TPO membrane ply lap over underlying membrane with adhesive and/or membrane fasteners and seam plates.
7. Apply spray foam over leading edge of tie-in ply lap and exposed membrane fasteners and seam plates.
8. Remove temporary connection at beginning of next workday by cutting membrane evenly along edge of existing roof system. Remove” deadman” insulation fillers.

3.11 FIELD QUALITY CONTROL

A. Final Roof Inspection: Arrange for roofing system manufacturer’s technical personnel to inspect roofing installation at various points of completion. Provide with copies of the previous inspection reports.

3.12 PROTECTING AND CLEANING

A. Protect roofing membrane from damage and wear during remainder of construction period. When remaining construction will not affect or endanger roofing, inspect roofing for deterioration and damage, describing its nature and extent in a written report, with copies to project superintendent.

B. Prior to performing work on a completed roof area that may cause damage the new roof, the roofing membrane and flashing shall be protected from physical damage. Proper and adequate protection includes installing a slip-sheet in the work area overlaid with plywood or OSB Board in order to dissipate the effects of traffic on the finished roof surface and to prevent impact damage to the system caused by dropped tools and or equipment. If damage does occur to the roof system it must be immediately repaired in order to preserve the integrity of the roof insulation.

C. Correct deficiencies in or remove roofing that does not comply with requirements, repair substrates, reinstall roofing, and repair base flashings to a condition free of damage and deterioration at the time of Substantial Completion and according to warranty requirements.

D. Clean over spray and spillage from adjacent construction using cleaning agents and procedures recommended by manufacturer of affected construction.

E. Contractor shall be responsible for vehicles and other property that is contaminated by cold adhesive over spray or drippage.

END OF SECTION

PART 1 ─ GENERAL

1.01 SUMMARY

A. This section includes flashing details, metals and installation instructions included on all roof sections covered under the scope of work. Refer to Section 07 54 10.

1.02 RELATED DOCUMENTS AND SECTIONS

A. Drawings and contract documents, including Section 01 01 00 - Summary of Work, apply to this section.

B. Section 07 54 10 - Thermoplastic Polyolefin (TPO) Membrane Roofing

C. Section 07 54 51 Fluid-Applied Membrane Roofing and Flashing

D. Section 07 92 00 Joint Sealants

1.03 REFERENCES:

A. SMACNA - Sheet Metal and Air Conditioning Contractors National Association, Inc.

B. ASTM - American Society for Testing and Materials, West Conshohocken, PA.

C. NRCA - National Roofing Contractors Association, Chicago, IL

D. UL - Underwriter's Laboratory, Northbrook, IL.

E. TRC - Tremco Research Center - Beachwood, OH

1.04 PERFORMANCE REQUIREMENTS

A. General: Install sheet metal flashing and trim to withstand wind loads, structural movement, thermally induced movement, and exposure to weather without failing, rattling, leaking, and fastener disengagement.

B. Fabricate and install roof edge flashing and copings capable of resisting the following forces according to recommendations in FMG Loss Prevention Data Sheet 1-49:
   1. Wind Zone 2: For velocity pressures of 31 to 45 lbf/sq. ft.: 90-lbf/sq. ft. perimeter uplift force, 120-lbf/sq. ft. corner uplift force, and 45-lbf/sq. ft. outward force.

C. Thermal Movements: Provide sheet metal flashing and trim that allow for thermal movements resulting from the following maximum change (range) in ambient and surface temperatures by preventing buckling, opening of joints, hole elongation, overstressing of components, failure of joint sealants, failure of connections, and other detrimental effects. Provide clips that resist rotation and avoid shear stress as a result of sheet metal and trim thermal movements. Base engineering calculation on surface temperatures of materials due to both solar heat gain and nighttime-sky heat loss.
   1. Temperature Change (Range): 120 deg F, ambient; 180 deg F, material surfaces.

D. Water Infiltration: Provide sheet metal flashing and trim that do not allow water infiltration to building interior.

1.05 SUBMITTALS

A. Product Data: For each type of product indicated.

B. Shop Drawings: Provide Shop Drawings indicating proposed detail for each flashing condition or termination not specifically shown on the Drawing. Details must be similar to those shown on the Drawings, and be permanently watertight without relying on sealant. Obtain Architect's approval prior to installing detail work in field.

C. Samples for Initial Selection: Provide manufacturers' standard color charts for each type of sheet metal flashing and trim indicated with factory-applied color finishes.

D. Samples for Verification: Provide a full-sized samples of the following items. Fabricate from specified sheet metal if approved sample could be used in field.
   1. Counterflashings: Include specified joint.
   2. Coping: Include specified joint and mitered corner.
   3. Gravel Stop: Include specified joint.
   4. Penetration Flashing: Each of boot/ rain shield and vent pipe flashing.
   5. Overflow Scupper: One full-size sample of overflow scupper liner.
   6. Expansion Joint Cover: Include specified joint.
   7. Divider Curb Covers: Include specified joint.

1.06 QUALITY ASSURANCE

A. Sheet Metal Flashing and Trim Standard: Comply with SMACNA's "Architectural Sheet Metal Manual." Conform to dimensions and profiles shown unless more stringent requirements are indicated.

B. Meet with Owner, if applicable, Installer, and installers whose work interfaces with or affects sheet metal flashing and trim including installers of roofing materials, roof accessories, unit skylights, and roof-mounted equipment.

C. Review methods and procedures related to sheet metal flashing and trim.

D. Examine substrate conditions for compliance with requirements, including flatness and attachment to structural members.

E. Document proceedings, including corrective measures and actions required, and furnish copy of record to each participant.

1.07 DELIVERY, STORAGE, AND HANDLING

A. Deliver sheet metal flashing materials and fabrications undamaged. Protect sheet metal flashing and trim materials and fabrications during transportation and handling.

B. Unload, store, and install sheet metal flashing materials and fabrications in a manner to prevent bending, warping, twisting, and surface damage.

C. Stack materials on platforms or pallets, covered with suitable weathertight and ventilated covering. Do not store sheet metal flashing and trim materials in contact with other materials that might cause staining, denting, or other surface damage.

1.08 COORDINATION

A. Coordinate installation of sheet metal flashing and trim with interfacing and adjoining construction to provide a leak proof, secure, and noncorrosive installation.

1.09 WARRANTY

A. Special Project Warranty: Sheet Metal Flashing and Trim is included in Roofing Installer's Warranty in Section 07 54 10.

PART 2 - PRODUCTS

2.01 SHEET METALS

A. Aluminum Sheet: ASTM B 209, Alloy 3003, 3004, 3105, or 5005, Temper suitable for forming and structural performance required, but not less than H14, in the following finish:
   1. Mill Finish and or clear anodized: Standard two-sides bright.

B. Stainless Steel (SS): Type 304, ASTM A 167, with AISI 2D finish, dead soft, fully annealed, 0.018 inch thick except as otherwise indicated.

C. Zinc-Coated (Galvanized) Steel Sheet: ASTM A 363, G90, 20 gauge.

D. Lead Sheet: ASTM B 749, Type L51121, copper-bearing lead sheet.

2.02 FLASHING MATERIALS

A. Per Sections 07 54 10.

B. Flashing Adhesive: Bonding Adhesive, Low VOC: Elastomeric, low-VOC solvent-based contact-type adhesive for bonding non-fleece-backed single ply membranes and flashings to substrates.
   1. Asbestos Content, EPA/600/R-93/116: None.
   2. VOC, maximum, ASTM D 3960: 200 g/L.

C. Adhesive to strip off flashings to roof: Cold-Applied Adhesive: One-part, polymeric adhesive.
   1. Volatile Organic Compounds (VOC), maximum, ASTM D 6511: 250 g/L.

D. Polyester Reinforcing Fabric for stripping: 100 percent stitch-bonded mildew-resistant polyester fabric intended for reinforcement of compatible fluid-applied membranes and flashings.
   1. Tensile Strength, ASTM D 1682: Not less than 50 lbf.
   2. Elongation, ASTM D 1682: Not less than 60 percent.
   3. Tear Strength, ASTM D 1117: Not less than 16 lbf.
   4. Weight: 3 oz. /sq. yd).

E. Stripping ply for flashings ply laps:
   1. Reinforcing Mesh.
      a. Glass-Fiber Fabric: Woven glass reinforcement treated with organic resin and complying with ASTM D 1668, Type III.
      b. Size: 6 inches minimum.
   2. Adhesive: Solvent Free Flashing Adhesive.

F. Stripping ply for 2-ply stripping of metal flange flashings:
   1. Base layer of 2-ply stripping ply:
      a. Base Ply Felt.
      b. 6 inches minimum.
   2. Top layer of 2 ply stripping ply:
      a. Base Ply Felt.
      b. 3 inches beyond base layer (9 inches minimum).
   3. Stripping ply adhesive: Cold Applied Adhesive
   4. Primer for metal flanges:
      a. Water based Primer.
      b. Low (VOC) Volatile Primer.

G. Asphalt Primer:
   1. Water-Based Asphalt Primer: Water-based, polymer modified, asphalt primer

2. Low VOC Compliant Asphalt Primer: Solvent-based asphalt primer.

H. Solvent-Free Elastomeric Roofing Mastic: One-part, solvent-free, asbestos-free, low-odor elastomeric roof mastic specially formulated for compatibility and use with specified roofing membranes and flashings.

I. Asphalt Roofing Mastic: One-part, asbestos-free, cold-applied mastic specially formulated for compatibility and use with specified roofing membranes and flashings and meets the requirements of ASTM D 4586, Type II, Class 1.

J. Flashing coating (As needed): Solar-reflective, high-solids, acrylic latex elastomeric roof coating formulated for use on bituminous roof surfaces; water-based, Energy Star qualified, CRRC listed and California Title 24 Energy Code compliant.
1. Volatile Organic Compounds (VOC), ASTM D 3960: 39 g/L.
2. Reflectance, minimum, ASTM C 1549: 86 percent.
3. Emissivity, minimum, ASTM C 1370: 0.93.
4. Solar Reflectance Index (SRI), ASTM E 1980: 103.

K. Primer for flashing coating: Acrylic Coating Primer: acrylic-based primer formulated for use with acrylic latex coatings.
1. Asbestos Content, EPA 600 R-93/116: None.
2. Volatile Organic Compounds (VOC), maximum, ASTM D 3960: 80 g/L.

L. Coating for other roof top applications:
1. Type I, heat-reflective, non-fibered, aluminum pigmented roof coating that meets the requirements of ASTM D 2824. Two (2) coats.
2. Acrylic, Pyramid by Garland or approved equal, 2 coats.

2.03 METAL FLASHINGS

A. All new sheet metal components (excluding Elastomeric Membrane Coated Metal) to be commercial quality and minimum twenty-four (24) gage Kynar pre-finished galvanized steel or Galvalume.
1. Metal Flashing fabrication shall comply with roof system manufacturer, SMACNA and NRCA recommendations
2. Install the following new sheet metal details where applicable:
a. Install Factory-Fabricated Roof Edge Fascia.
1) Install metal extender fascia as required.
b. Install new metal coping cap.
1) Install new expansion joint metal cover.
c. Install new metal counterflashings.
1) Cut-in new reglet joints as required.
2) Reuse existing 2-piece metal counterflashing receiver when feasible. Replace defective or damaged receiver. Install new counterflashing to match existing receiver metal type.
3) Install new surface mounted counterflashing detail where the installation of a reglet mounted counterflashing is not possible. Locations to be determined by ARCHITECT at pre-job walk.
4) Install new slip metal counter flashing detail at non-removable unit locations.
d. Install miscellaneous metal flashings and related accessories.
e. Install new Elastomeric Coated Metal roof edge fascia, scuppers, pitch pans and miscellaneous metal-flanged details.

B. Pre-finished Galvalume Steel Metal Flashings:
1. Flat Sheet,

a. Aluminum zinc alloy-coated by hot-dipped process per ASTM A792 specifications.
b. Prefinished specification grade aluminum zinc sheet, primed and coated with a full-strength fluoropolymer (PVDF) high performance coating system of 1.0 mil total dry film thickness and on reverse side, a wash coat of 0.3 - 0.4 mil dry film thickness.
c. Finish and Color:
1) Coated with a 2- coat system using a combination of 70% Kynar 500® / Hylar 5000® polyvinylidenefluoride (PVDF), acrylic resins, pigments and solvents. The system consists of Fluropon topcoat applied over polyester primer. A wash coat is applied to the reverse side for additional protection.
2) The Kynar 500® / Hylar 5000® coating must be mechanically removed if soldering or welding is necessary.
3) All sheet metal to be pre-painted.
4) Color as selected by owner from manufacturer's standard color chart.
d. Minimum Gage: Twenty-four (24).

C. Pre-finished Galvanized Steel Metal Flashings:
1. Twenty-four (24) gage minimum, G-90 galvanized steel; commercial quality, Fed. Spec. QQ-S-775, Type I, Class D or ASTM A 526 or lock forming quality ASTM A 527, G90 coating in accordance with ASTM A 525. All sheet metal to be pre-painted.
a. Paint finish at exposed side: Factory applied baked-on two (2) coat system comprised of one (1) coat of full 70% resin fluorocarbon (polyvinylidene fluoride PVF2) by Kynar 500 or accepted substitute over a smooth coat of corrosion-resistant epoxy-based primer. Color as selected by Owner. Provide Clear anodized finish.
b. Finish at underside shall be a wash coat over a coat of corrosion-resistant epoxy-based primer.

D. Continuous extruded aluminum anchor bar and snap-on fascia cover.
1. Model: AF-85
2. Fascia Metal: .040" thick, formed aluminum with Kynar 500 finish. Color as selected by Owner. Clear Anodized.
3. Extruded Bar: 6063-T6-alloy aluminum.
4. Miters: Factory-fabricated
5. Sealant: Per manufacturer's recommendation.
6. Compressible Tape: Per manufacturer's recommendation.
7. Fasteners: 1-5/8 inch, hex head corrosion resistant fastener (furnished by Metal-Era).

E. Two-Piece Counterflashings:
1. Re-use existing counterflashing receiver where applicable.
2. New counterflashing shall match existing receiver type.

F. Details not addressed in specification shall be in accordance with Architectural Sheet Metal Manual, as issued by Sheet Metal and Air Conditioning Contractors' National Association, Inc., (SMACNA).

2.04 MECHANICAL FASTENERS

A. Fasteners and connectors for ASQ or copper azoles pressure treated wood shall be of hot-dipped galvanized steel, stainless steel or fluorocarbon coated (excluding one-half inch diameter or greater steel bolts).

1. Do not use standard carbon steel, aluminum or electroplated galvanized fasteners in ASQ or copper azoles pressure treated wood.

B. Fasteners: Provide stainless steel wood screws, annular threaded nails, self-tapping screws, self-locking rivets and bolts, and other suitable fasteners designed to withstand design loads.
1. Nails (Concealed): Stainless steel common nails, 0.109 inch diameter minimum. Length to provide minimum 1-1/4 inch embedment.
2. Screws (stainless steel): ASTM A 478, Type 304 stainless steel, pan or truss head, with neoprene washers, No. 8 x 1/2 inch for fastening metal to metal, No. 10 x 1 1/2 inches for fastening metal to wood.
3. Blind Fasteners: Stainless steel rivets.
4. Nailins: Stainless steel nail with a mushroom head in zinc body, 1/4 inch diameter, length to bed in substrate a minimum 1-1/2 inches.

C. Copper sheet metal to wood blocking:
1. Copper Wire Slating Nails, round shank, not smaller than twelve (12) gage by Clendenin Bros., Inc., Baltimore, MD.
2. Length: Sufficient to penetrate wood blocking 1-1/4 inches minimum.

D. Stainless sheet steel to wood blocking:
1. FS FF-N-105B (3) Type II, Style 20, roofing nails; hot dipped galvanized steel wire, flat head, diamond point, round, barbed shank.
2. Length: Sufficient to penetrate wood blocking 1-1/4 inches minimum

E. Galvanized sheet steel to wood blocking:
1. FS FF-N-105B (3) Type II, Style 20, roofing nails; hot dipped galvanized steel wire (ASTM A 792), flat head, diamond point, round, barbed shank.
2. Length: Sufficient to penetrate wood blocking 1-1/4 inches minimum.

F. Aluminum sheet metal to wood blocking:
1. FS FF-N-105B (3) Type II, Style 20, roofing nails; 6061-t913 alloy wire, flat head, diamond point, round, barbed shank
2. Length: Sufficient to penetrate wood blocking 1-1/4 inches

G. Aluminum sheet metal to ASQ pressure treated wood blocking:
1. Use Type 300 Series stainless steel roofing nails or fluorocarbon-coated fasteners.
2. Length: Sufficient to penetrate wood blocking 1-1/4 inches

H. Termination bar to masonry/concrete:
1. Lead masonry anchors.
2. Length: Sufficient to provide 1-1/4 inches embedment minimum.

2.05 ACCESSORY MATERIALS

A. General: Provide materials and types of fasteners, solder, welding rods, protective coatings, separators, sealants, and other miscellaneous items as required for complete sheet metal flashing and trim installation.

B. Elastomeric mastic for fascia cover plate: One-part urethane caulk.

C. Metal cleaner: Mineral spirits

D. Pipe supports: Triangle Pipe Supports.

E. Solder for Stainless Steel: ASTM B 32, Grade Sn60, with an acid flux of type recommended by stainless-steel sheet manufacturer.

F. Solder for Lead: ASTM B 32, Grade Sn50, 50 percent tin and 50 percent lead.

G. Sealing Tape: Pressure-sensitive, 100 percent solids, polyisobutylene compound sealing tape with release-paper backing. Provide permanently elastic, non-sag, nontoxic, non-staining tape, 1/8” x 1”.

H. Elastomeric Sealant: ASTM C 920, elastomeric polyurethane polymer sealant; of type, grade, class, and use classifications required to seal joints in sheet metal flashing and trim and remain watertight.

I. Butyl Sealant: ASTM C 1311, single-component, solvent-release butyl rubber sealant, polyisobutylene plasticized, heavy bodied for hooked-type expansion joints with limited movement.

J. Bituminous Coating: Cold-applied asphalt mastic, SSPC-Paint 12, compounded for 15-mil dry film thickness per coat. Provide inert-type noncorrosive compound free of asbestos fibers, sulfur components, and other deleterious impurities.

K. Batt Insulation: Fiberglass.

L. Drawband: 1/2 inch wide band with slotted worm drive mechanism. All components stainless steel.
1. Gold Seal stainless steel worm gear clamp by Murray Corporation, Cockeysville, MD.
2. Power-Seal stainless steel worm drive clamps by Breeze Clamp Company, Saltsburg, PA

M. Termination Bar:
1. Aluminum, with caulk receiver: 1/4 by 1 inch
2. Primer: Non-Porous Primer
3. Caulking: One-part urethan caulk
4. Compressible tape: Teflon tape.

N. Pitch Pan Fill:
1. Base fill: ASTM C928-92a, rapid hardening non-shrink grout.
2. Top fill: Solvent free flashing adhesive
3. Pourable Sealer: One compartment polyurethane, sealant gun grade, moisture cured, resistant to UV and ozone.

2.06 FINISHES

A. Comply with NAAMM's "Metal Finishes Manual for Architectural and Metal Products" for recommendations for applying and designating finishes.

B. Protect mechanical and painted finishes on exposed surfaces from damage by applying a strippable, temporary protective covering before shipping.

C. Appearance of Finished Work: Variations in appearance of abutting or adjacent pieces are acceptable if they are within one-half of the range of approved Samples. Noticeable variations in the same piece are not acceptable. Variations in appearance of other components are acceptable if they are within the range of approved Samples and are assembled or installed to minimize contrast

2.07 METAL FABRICATION

A. Metal Copings: Aluminum, .050-inch-thick, shaped as indicated, with continuous cleat and splice plates. No exposed fasteners. Include cover plates to conceal and weather seal joints and attachment flanges. Provide extruded closure plates (top and bottom) as required and mitered, welded corners. Color as selected. ANSI/SPRI ES-1 F.M. approved. Provide 20-year finish warranty.

B. Free Floating Fascia/Gravel Stop:
   1. Extruded Aluminum Fascia system with extruded aluminum continuous cant; continuous extruded aluminum retainer; 10’ lengths, min. 4” joint splice plates; 8” nominal face, .063-inch thickness. Provide pre-formed corners (inside/outside), extenders and other components as needed. Mill finish. ANSI/SPRI ES-1 F.M. approved. No exposed fasteners.
   2. Re-use existing TremLine fascia, extenders, cants and retainers. Replace components as necessary to provide complete system. Clean before re-installation. Provide additional pieces to replace any damaged or broken components due to removal, storage and re-installation.
   3. Extender Metal: Aluminum .050-inch-thick with continuous cleat and splice plate. Include cover plates to conceal and weather seal joints. Mill finish. Max. 8” face height.

C. Gravel Stops: Fabricate in minimum 8-foot-long, but not exceeding 10-foot-long, sections. Fabricate joint plates of same thickness as gravel stops. Furnish with continuous cleats to support edge of external leg and drill elongated holes for fasteners on interior leg. Miter corners, seal, and solder or weld watertight.
   1. Aluminum: 0.0625 inch thick.
   2. Butt joints and provide 12-inch-wide concealed backup plates and 6 inch wide top cover plates.
   3. Lap, rivet and seal corners.
   4. Provide end caps or flat plates with 4-inch flanges at end terminations; seal to coping with butyl sealant.

D. Counterflashing/ Counterflashing Extensions: 0.018-inch stainless steel. Fabricate with length sufficient to lap base flashing as indicated on the Drawings.

E. Cap/ Curb Flashings: Fabricate from 0.018-inch-thick stainless steel. Lap and seal joints. Fabricate with length sufficient to lap base flashing as indicated on the Drawings.

F. Divider Curb Covers: 0.018-inch stainless steel. Fabricate in minimum 8-foot-long, but not exceeding 10-foot-long, sections. Provide one-inch high standing seams at joints. Provide mitered, riveted, and soldered corners. Solder end caps or flat plates with 4 inch flanges at end terminations.

G. Expansion Joint Covers: 0.018-inch stainless steel. Lock and solder joints. Secure to cleats spaced 18 inches on center. Fabricate to dimensions indicated on the Drawings.

H. Vent Pipes: 3.0 lb/sq. ft. lead, hard tempered.

I. Roof-Penetration Flashing: 0.018-inch-thick stainless steel. Fabricate boots/ collars with 4-inch flanges; solder all joints. Fabricate rain shields with integral lip for receiving sealant, and solder joints.

J. Roof-Drain Flashing: As recommended by roof system manufacturer.

K. Pipe/ Conduit Enclosures: Fabricate from 0.018-inch stainless steel. Lap, rivet and solder joints except where shown on Drawing.

2.08 FABRICATION, GENERAL

A. General: Custom fabricate sheet metal flashing and trim to comply with recommendations in SMACNA's "Architectural Sheet Metal Manual" that apply to design, dimensions, metal, and other characteristics of item indicated. Shop fabricate items where practicable. Obtain field measurements for accurate fit before shop fabrication.

B. Fabricate sheet metal flashing and trim in thickness or weight needed to comply with performance requirements, but not less than that specified for each application and metal.

C. Fabricate sheet metal flashing and trim without excessive oil canning, buckling, and tool marks and true to line and levels indicated, with exposed edges folded back to form hems.

D. Seams for Aluminum: Fabricate nonmoving seams with flat-lock seams. Form seams and seal with epoxy seam sealer. Rivet joints for additional strength.

E. Seams for Other Than Aluminum: Fabricate nonmoving seams in accessories with flat-lock seams. Tin edges to be seamed, form seams, and solder.

F. Sealed Joints: Form non-expansion but movable joints in metal to accommodate elastomeric sealant to comply with SMACNA recommendations.

G. Expansion Provisions: Where lapped or bayonet-type expansion provisions in the Work cannot be used, form expansion joints of intermeshing hooked flanges, not less than 1 inch deep, filled with elastomeric sealant concealed within joints.

H. Conceal fasteners and expansion provisions where possible on exposed-to-view sheet metal flashing and trim, unless otherwise indicated.

I. Fabricate cleats and attachment devices from same material as accessory being anchored or from compatible, noncorrosive metal.
   1. Thickness: As recommended by SMACNA's "Architectural Sheet Metal Manual" for application but not less than thickness of metal being secured.

PART 3 - EXECUTION

3.01 EXAMINATION

A. Examine substrates, areas, and conditions, with Installer present, to verify actual locations, dimensions and other conditions affecting performance of work.

B. Verify that substrate is sound, dry, smooth, clean, sloped for drainage, and securely anchored.

C. Proceed with installation only after unsatisfactory conditions have been corrected.

3.02 GENERAL FLASHING REQUIREMENTS

A. Install Flashing using flashing adhesive:
   1. Adhere flashing sheeting completely to flashing surface, cant, and roofing with a ¼ inch notched trowel at 1 gallon per 12 sq. ft. of flashing adhesive, immediately embed flashing sheeting into the flashing adhesive.
   2. Apply consistent pressure to entire surface of flashing sheeting using a steel hand roller to achieve full adhesion of the sheeting to the flashing substrate. Ensure complete bond and continuity without wrinkles or voids. Lap sheeting ends 6 inches. Adhere laps with flashing adhesive.
   3. Seal horizontal edges of sheeting to roof surface and vertical edges of sheeting with reinforcing membrane embedded in a base course of flashing adhesive mastic and a top course of flashing adhesive.
   4. Elastomeric sheeting width: sufficient to extend at least 6 inches beyond toe of cant onto new roof.
   5. Secure top edge of flashing membrane with metal termination bar and Teflon Tape. Fasten bar 6 to 8 inches o.c. Seal termination bar with three-course reinforcing mesh and asphaltic mastic as required.

B. Two Ply stripping for metal flanges:

1. Set flange in asphalt mastic. Seal flange with two stripping plies embedded between alternate applications of stripping adhesive/bitumen. Extend first ply 3 inches beyond flange; second ply 3 inches beyond first ply.

3.03 SURFACING TREATMENT ON FLASHINGS

A. Surfacing Treatment for Flashings: Coat flashings as required due to smeared, soiled, or discolored material.
   1. Prepare surface as required by roofing system manufacturer.
   2. Apply coating over exposed flashing membrane surfaces, at an approximate rate of 130 to 200 square feet per gallon per coat, 2 coats. Prime as recommended by system manufacturer first.

3.04 METAL FLASHING GENERAL REQUIREMENTS

A. General: Anchor sheet metal flashing and trim and other components of the Work securely in place, with provisions for thermal and structural movement. Use fasteners, solder, welding rods, protective coatings, separators, sealants, and other miscellaneous items as required to complete sheet metal flashing and trim system.

B. Torch cutting and abrasive cutting of sheet metal flashing and trim are not permitted. Hand shears or electric shears may be used.

C. Metal Protection: Where dissimilar metals will contact each other or corrosive substrates, protect against galvanic action by painting contact surfaces with bituminous coating or by other permanent separation as recommended by fabricator or manufacturers of dissimilar metals.

D. Coat side of stainless-steel sheet metal flashing and trim with bituminous coating where flashing and trim will contact wood, ferrous metal, or cementitious construction.

E. Underlayment: Where installing metal flashing directly on cementitious or wood substrates, install a course of felt underlayment and cover with a slip sheet or install a course of polyethylene underlayment.

F. Embed flanges in thick coat of asphalt roofing cement where required for waterproof performance.

G. Install exposed sheet metal flashing and trim without oil canning, buckling, and tool marks.

H. Install sheet metal flashing and trim true to line and levels indicated. Provide uniform, neat seams with minimum exposure of solder, welds, and elastomeric sealant.

I. Install sheet metal flashing and trim to fit substrates and to result in watertight performance. Verify shapes and dimensions of surfaces to be covered before fabricating sheet metal.

J. Expansion Provisions: Provide for thermal expansion of exposed flashing and trim. Space movement joints at a maximum of 10 feet with no joints allowed within 24 inches of corner or intersection. Where lapped or bayonet-type expansion provisions cannot be used or would not be sufficiently watertight, form expansion joints of intermeshing hooked flanges, not less than 1 inch deep, filled with elastomeric sealant concealed within joints.

K. Fasteners: Use fasteners of sizes that will penetrate substrate not less than 1-1/4 inches for nails and not less than 3/4 inch for wood screws.
   1. Galvanized or Prepainted, Metallic-Coated Steel: Use stainless-steel fasteners.
   2. Aluminum: Use aluminum or stainless-steel fasteners.

3. Copper Use copper or stainless-steel fasteners.
4. Stainless Steel: Use stainless-steel fasteners.

L. Seal joints with elastomeric sealant as required for watertight construction.
1. Where sealant-filled joints are used, embed hooked flanges of joint members not less than 1 inch into sealant. Form joints to completely conceal sealant. When ambient temperature at time of installation is moderate, between 40 and 70 deg F, set joint members for 50 percent movement either way. Adjust setting proportionately for installation at higher ambient temperatures. Do not install sealant-type joints at temperatures below 40 deg F.
2. Prepare joints and apply sealants to comply with requirements in Section 07 92 00.

M. Soldered Joints: Clean surfaces to be soldered, removing oils and foreign matter. Pretin edges of sheets to be soldered to a width of 1-1/2 inches except where pretinned surface would show in finished Work.
1. Stainless-Steel Soldering: Pre-tin edges of uncoated sheets to be soldered using solder recommended for stainless steel and phosphoric acid flux. Promptly wash off acid flux residue from metal after soldering.
2. Do not use open-flame torches for soldering. Heat surfaces to receive solder and flow solder into joints. Fill joints completely. Completely remove flux and spatter from exposed surfaces.

3.05 ROOF DRAINAGE SYSTEM INSTALLATION

A. General: Install sheet metal roof drainage items to produce complete roof drainage system according to SMACNA recommendations and as indicated. Coordinate installation of roof perimeter flashing with installation of roof drainage system.

3.06 ROOF FLASHING INSTALLATION

A. General: Install sheet metal roof flashing and trim to comply with performance requirements and SMACNA's "Architectural Sheet Metal Manual." Provide concealed fasteners where possible, set units true to line, and level as indicated. Install work with laps, joints, and seams that will be permanently watertight.

B. Pipe or Post Counterflashing: Install counterflashing umbrella with close-fitting collar with top edge flared for elastomeric sealant, extending a minimum of 4 inches over base flashing. Install stainless-steel draw band and tighten.

C. Counterflashing: Coordinate installation of counterflashing with installation of base flashing. Insert counterflashing in reglet or receiver and fit tightly to base flashing. Extend counterflashing 4 inches over base flashing. Lap counterflashing joints a minimum of 4 inches and bed with elastomeric sealant.
1. Secure in a waterproof manner by means of snap-in installation and sealant or lead wedges and sealant.

D. Roof-Penetration Flashing: Coordinate installation of roof-penetration flashing with installation of roofing and other items penetrating roof. Install flashing as follows:
1. Turn lead flashing down inside vent piping, being careful not to block vent piping with flashing.
2. Seal with elastomeric sealant and clamp flashing to pipes penetrating roof except for lead flashing on vent piping.

3.07 WALL FLASHING INSTALLATION

A. General: Install sheet metal wall flashing to intercept and exclude penetrating moisture according to SMACNA recommendations and as indicated. Coordinate installation of wall flashing with installation of wall-opening components such as windows, doors, and louvers.

3.08 METAL FLASHING INSTALLATION

A. Metal roof edge extender flashing:
   1. Install new roofing over blocking edge, Nail with spiral or annular shank nails, 8 inches o.c. Nails to have 1-inch integral cap.
   2. Fabricate to accommodate existing conditions and install metal edge extender flashing with formed drip edge incorporating 3/4-inch lock.
      a. Secure fascia bottom with 3/4-inch lock to continuous cleat nailed 10 inches o.c. Cleat shall be one gauge heavier than fascia.
      b. Gap fascia ends 1/2 inch: overlap cleat joints - 1 inch. Set flange in mastic. Cover fascia ends with cover plate profiled to fascia. Set cover in mastic; nail to wood blocking through gap between fascia joints.
   3. Install metal roof edge fascia with cleat.
      a. Refer to Section 07 52 00 for material and application requirements

B. Factory-Fabricated Roof Edge Fascia:
   1. Install new roofing to blocking edge to replace defective blocking. Nail with spiral or annular shank nails, 8 inches on center.
   2. Install extruded aluminum free-floating fascia system according to manufacturer's published instructions
   3. Fold roofing membrane at corners and install miter anchor bars using 1 5/8 inch hex head fasteners. Apply a heavy 3/8 inch bead of Waterblock sealant to splice plate and anchor bar per manufacturer's recommendations. Fasten anchor bar corners to nailers with one splice plate under each end of corner. The gasket must be snug to ends of anchor bar.
   4. Install anchor bar with applied Waterstop sealant. Overlap splice plate and but snuggly into gasket. Allow 1/2 inch space between anchor bars. Install splice plate with applied Waterstop sealant at other end of anchor bar. Fasten anchor bar 12 inches on center through slots using 1 5/8 inch hex head fasteners. Field cut sections as required.
   5. Install 2-piece snap-on fascia corners at miter edges.
   6. Note: Remove protective plastic film prior to installing each fascia section.
   7. Position fascia covers on top of anchor bar and overlap preceding fascia cover approximately 1 inch. Install fascia covers from right to left as seen from rooftop. Place fascia covers atop anchor bar and snap into place by applying downward pressure with palm of hand until fascia cover is fully engaged along the entire length. Continue to install fascia covers, field cutting as required.

C. Standing seam coping cap:
   1. Install and attach wood blocking to top of parapet wall where missing.
   2. Install shims or beveled wood strips to provide inward slope to finished coping cap.
   3. Install elastomeric base flashing described in general flashing requirements section over top of parapet blocking and down outside face of wall, covering wood nailers completely. Extend roof membrane a minimum of 1/2 inch below the first row of nailers. Fasten membrane to outside edge of wood blocking with spiral or annular shank nails, 8 inches on center.
      a. Seal horizontal and vertical edges of sheeting by heat welding.

4. Install continuous bent cleat on outside edge of wood blocking. Cleat shall be one gage heavier than coping cap. Lap ends 1 inch. Nail 16 inches o.c.
5. Fabricate and install standing seam coping cap. Connect coping sections with 1-1/4 inch high standing seam. Extend front and rear sides of cover 2 inches beyond wood blocking. Bend lower edges out 30 degrees maximum to form drip edge. Attach both edges to continuous cleats with 3/4-inch lock. No exposure fasteners. At corners, form standing seam and miter.
6. Overlap fascia ends 1 inch and seal underside with caulk; overlap cleat joints a minimum 1 inch.

D. Wall flashings - reglet counterflashing:
1. Extend new roofing to top edge of cant.
2. Install elastomeric base flashing described in general flashing requirements section.
3. Secure top edge of flashing membrane to vertical substrate with metal termination bar secured 6 inches o.c. maximum.
4. Fabricate and install new counterflashing.
5. Install counterflashing into reglet joint and secure with lead wedges 8 inches o.c. maximum.
6. Wipe clean metal surfaces of flashing joint with metal cleaner. Prime metal joint surfaces with metal primer. Allow to dry.
7. Caulk flashing joint. Provide watershed. Tool neatly.

E. Two-piece reglet mounted counterflashing:
1. Extend new roofing to top edge of cant.
2. Install elastomeric base flashing described in general flashing requirements section.
3. Secure top edge of flashing membrane to vertical substrate with termination bar secured 6 to 8 inches o.c. maximum
4. Re-use existing counterflashing receiver where applicable.
5. When wall flashings are completed, attach counterflashing by sliding it in at the outside open end of the receiver. Once counterflashing is locked into receiver, insert fasteners through all prepunched holes.
6. Stagger counterflashing joints and receiver joints 6” minimum with 1/4” gap between each joint. Neatly trim length of counterflashing section to fit.
7. After counterflashing is installed, attach each joint plate to the bottom of the counterflashing while lifting upward and locking it to the top of the receiver. Tap the top of Joint plate at receiver with rubber mallet to lock together.
8. Once entire system is installed, prime receiver with TremPrime Non-Porous Primer and apply a bead of TremSEAL D or Reglet Joint Sealant.

F. Installation of counter flashing at wall:
1. Extend new roofing to top edge of cant.
2. Install elastomeric base flashing described in general flashing requirements section.
3. Sandwich top edge of sheeting between two (2) layers flashing tape.
4. Secure top edge of flashing membrane to vertical substrate with termination bar secured 6 to 8 inches o.c. maximum
5. Wipe top of bar clean with metal cleaner. Prime metal surface to receive sealant with metal primer. Allow to dry.
6. Caulk top of bar. Provide watershed. Tool neatly.
7. Remove bottom course of fasteners securing corrugated wall panels.
8. Fabricate and install new counterflashing behind corrugated wall panels. Fasten counterflashing through corrugated wall every 8 inches using neoprene grommetted fasteners.

G. Curb flashings:
1. Remove mechanical equipment from curb where applicable.
2. Raise curb to accommodate new insulation height.
3. Extend new roofing to top edge of cant.
4. Install elastomeric base flashing described in general flashing requirements section.
5. Secure top edge of flashing to substrate with termination bar; mechanically fastened 8 inches o.c. maximum.
   a. Termination bar may be omitted when mechanical equipment is raised, flashing ply is run up and over topside of curb and secured to inside of curb.
   b. Install Elastomeric base flashings over top of curb blocking. Extend down 2 inches over edges and fasten to inside of curb. Fasten 8 inches o.c. with spiral or annular nails, with a 1-inch cap.
6. Wipe top of bar clean with metal cleaner. Prime metal surface to receive sealant with metal primer. Allow to dry.
7. Caulk top of bar. Provide watershed. Tool neatly.
8. Fabricate and install counterflashing.
9. Reinstall mechanical equipment onto curb. Refasten.

H. Slip metal counterflashing:
1. Extend new roofing to top edge of cant.
2. Install elastomeric base flashing described in general flashing requirements section.
3. Secure top edge of flashing to substrate with termination bar; mechanically fasten 8 inches o.c. maximum.
4. Wipe top of bar clean with metal cleaner. Prime metal surface to receive sealant with metal primer. Allow to dry.
5. Caulk top of bar. Provide watershed. Tool neatly.
6. Fabricate and install sheet metal counterflashing behind existing metal coping cap, counterflashing, or water table. Fasten counterflashing every 12 inches o. c. using lead masonry anchors or appropriate fastener for other substrate as determined by superintendent.

I. Plumbing and Vent stack flashings: Lead plumbing vent flashing:
1. Wedge plumbing vent tight against deck.
2. Apply 1/16-inch uniformly thick layer of asphalt mastic to surface receiving metal flange.
3. Fabricate and install plumbing vent flashing from lead. Flange: 4 inches wide minimum, extend completely around periphery of vent flashing. Set flange into mastic. Neatly dress flange with wood block.
4. Prime metal flange with asphalt primer.
5. Pipe outside diameter greater than 2 inches: Bend lead inside pipe 1-inch minimum with pliers or rubber/plastic mallet; replace cracked lead.
6. Pipe outside diameter 2 inches or less: Cut lead at vent top; fabricate and install integral lead cap.

J. Metal sleeve with storm collar:
1. Apply 1/16-inch uniformly thick layer of asphalt mastic to surface receiving metal flange.
2. Fabricate and install sleeve flashing. Height: 8 inches. Flange width: 4 inches. Flange to extend completely around flashing periphery. Solder all joints. Double solder vertical joints.
3. Nail flange to wood blocking 3 inches o.c., staggered.

4. Prime flange with asphalt primer.
5. Install two (2) ply stripping described in general flashing requirements section.
6. Fabricate storm collar with bolted connection. Cover sleeve flashing 3 inches minimum. Tighten bolts.
7. Wipe clean top of storm collar and projection with metal cleaner. Prime surface with metal primer. Caulk projection/sheet metal interface. Provide watershed. Tool neatly.

K. Pitch pans with grout and hood enclosure:
1. Fabricate pitch pans. Sides: 4 inches high, hemmed to outside at top edge. Flange: 4 inches wide, completely around periphery. Solder all joints. Clearance between projection and pitch pan: 2 inches Set flange in mastic.
2. Pack gap between roof-penetrating element and deck with compressible insulation. Seal with reinforcing membrane embedded between alternate courses of asphalt mastic.
3. Nail flange to wood blocking 3 inches o.c., staggered.
4. Prime metal flange, projection, and pitch pan interior with asphalt primer.
5. Install two (2) ply stripping described in general flashing requirements section.
6. Fill pitch pan to within 1 inch from top with non-shrink grout. Allow to set firm.
7. Fill pitch pan with specified mastic. Double fill if necessary.
8. Fabricate and install umbrella with drawband over pitch pan. Tighten drawband.
9. Wipe clean top of umbrella and projection with metal cleaner. Prime surface with metal primer.
10. Install hood enclosures.

L. Hot stack pipe detail.
1. Install sleeve flashing per manufacturer's recommendation. Height: 8 inches. Flange width: 4 inches. Flange to extend completely around flashing periphery. Solder all joints. Double solder vertical joints.
2. Apply a heavy 3/8 inch bead of sealant to roofing surface receiving metal flange.
3. Nail flange to wood blocking 3 inches o.c., staggered.
4. Install Prefabricated or Field Fabricated Flashing Boots in accordance with roof system manufacturers recommendations.
5. Fabricate storm collar with bolted connection. Cover sleeve flashing 3 inches minimum. Tighten bolts.
6. Wipe clean top of storm collar and projection with metal cleaner. Prime surface with metal primer. Caulk projection/sheet metal interface. Provide watershed. Tool neatly.

3.09 EXISTING METAL FLASHING AND ROOF TOP EQUIPMENT REFLECTIVE COATING

A. Metal Surface Preparation:
1. Inspect metal surfaces on which coatings will be applied and notify Project Superintendent of any detrimental defects.
2. Clean and prepare surface in accordance with coating manufacturer's approved product data sheets and printed label instructions.
   a. Surface must be sound, clean, dry and free from dust, oil, chalk, and other contaminants. Prepare surface using SSPC-SP2.
   b. Remove loose, peeling, cracked and blistered surfaces by chipping, scraping and sanding.
   c. Wire brush, scrape, or sand down rust and loose paint. Power tool cleaning is preferred but hand tool cleaning is acceptable.
3. Thoroughly clean surfaces to remove rust, dirt, soot, grease, mildew, chalkiness and stains.

a. Remove any oil or grease from the surface by either high pressure water blast incorporating a biodegradable detergent or TSP, or the use of clean rags soaked in approved solvent. (SSPC-SP1).

4. Surfaces must be dry, free of dust and foreign material. Lightly prime weathered surfaces with TremPrime QD or TremPrime WB at 200-400 sq. ft/gal. Do not overprime.

B. Apply Fibrated Aluminum Coating over prepared metal surfaces.

1. Mix thoroughly prior to application.
2. Apply Fibrated Aluminum by roller or brush. If spray applied, take necessary precautions to avoid overspray.
3. To ensure optimum brilliance, apply in two coats. Allow five hours cure time between coats under normal conditions. Avoid foot traffic over coated surfaces for 24 hours.
4. Install coating at a rate of 130-200 sq. ft/gal. per coat. Two coats are recommended. Coverage may vary with texture and porosity of surface.

3.10 CLEANING AND PROTECTION

A. Clean exposed metal surfaces of substances that interfere with uniform oxidation and weathering.

B. Clean and neutralize flux materials. Clean off excess solder and sealants.

C. Remove temporary protective coverings and strippable films as sheet metal flashing and trim are installed. On completion of installation, clean finished surfaces, including removing unused fasteners, metal filings, pop rivet stems, and pieces of flashing. Maintain in a clean condition during construction.

D. Replace sheet metal flashing and trim that have been damaged or that have deteriorated beyond successful repair by finish touchup or similar minor repair procedures.

END OF SECTION

PART 1 ─ GENERAL

1.1 WORK INCLUDED

A. Gutters.

B. Downspouts.

1.2 RELATED WORK

A. Section 07 62 00 – Sheet Metal Flashing and Trim

1.3 REFERENCES

A. ASTM D2822 - Asphalt Roof Cement

B. NRCA (National Roofing Contractors Association) - Roofing and Waterproofing Manual.

C. SMACNA - Architectural Sheet Metal Manual.

1.4 SUBMITTALS

A. Submit under provisions of Section 01 33 00.

B. Shop Drawings: Indicate configuration and dimension of components, adjacent construction, required clearances, tolerances, splices and other affected work.

C. Product Data: Provide product data on shape of components, materials and finishes, anchor types and locations.

D. Samples: Submit two (2) samples, 12 x 12 inches in size illustrating component shape, finish and color.

E. Manufacturer's Installation Instructions: Indicate special procedures and perimeter conditions requiring special attention.

1.5 QUALITY ASSURANCE

A. Perform Work in accordance with NRCA details or as detailed within the documents.

B. All components shall be from one manufacturing source.

1.6 WARRANTY

A. Warranty as part of whole roofing system warranty per section 07 52 00.

PART 2 PRODUCTS

2.1 ACCEPTABLE MANUFACTURERS

A. Specified Manufacturer
   1. Petersen Aluminum Company (Pac-Clad)
   2. Una-Clad
   3. Met Fab
   4. Atas International

B. Substitutions: Under provisions of Section 01 60 00.

2.2 COMPONENTS

A. Gutters: Custom box gutter to match existing gutter, .050 inch aluminum gutter with internal gutter strap with mechanical fasteners at 16” on center with Kynar 500 finish as selected. Provide factory formed internal and external corners. (Spike and farrel is unacceptable.)

B. Downspouts: Custom Downspout – match existing size and confrguration; .050 inch aluminum downspout with Kynar 500 finish as selected. Provide downspout straps at 3 feet on center.
   1. Coordinate with existing downspout boot receiver.

C. Scuppers: Custom scupper box to match existing scupper, 0.50 inch aluminum scupper, Kynar 500 finish.

2.3 ACCESSORIES

A. Sealant: Roofing Manufacturer's standard type suitable for use with installation of system; non-staining, skinning, non-skinning, non-shrinking and non-sagging; ultra-violet and ozone resistant; color as selected.

2.4 FINISHES

A. Provide Kynar finish with 20 year finish warranty as specified.

PART 3 EXECUTION

3.1 INSPECTION

A. Verify that deck, curbs, roof membrane, base flashing, and other items affecting work of this Section are in place and positioned correctly.

3.2 INSTALLATION

A. Install components in accordance with manufacturer's instructions.

B. Conform to NRCA - Waterproofing Manual drawing details.

C. Coordinate installation of components of the section with installation of roofing membrane and base flashings.

D. Coordinate installation of flashing flanges into reglets.

END OF SECTION

PART 1 - GENERAL

1.01 RELATED DOCUMENTS

A. Drawings and contract documents, including Section 01 01 00 Summary of Work, apply to this section.

1.02 SECTION INCLUDES

A. The requirements and application procedures for installing sealant materials.

1.03 RELATED SECTIONS

A. Section 07 54 10 - Thermoplastic Polyolefin (TPO) Membrane Roofing

B. Section 07 54 51 Fluid-Applied Membrane Roofing and Flashing

C. Section 07 62 00 Sheet Metal Flashing and Trim

D. Section 09 90 00 Paints and Coatings

E. Section 23 10 00 Mechanical / Electrical General Requirements

F. Section 23 16 00 Roof Drains

1.04 REFERENCES

A. ASTM C 920-87, TYPE S, GRADE NS, CLASS 25.

1.05 SUBMITTALS

A. Submit under provisions of Section 01 60 00.

B. Product Data: Provide data indicating sealant chemical characteristics, performance criteria, substrate preparation, limitations, and color availability.

C. Samples: Submit two samples, 1 x 4 inch in size illustrating sealant colors for selection.

D. Manufacturer's Installation Instructions: Indicate special procedures, surface preparation, and perimeter conditions requiring special attention.

1.06 DELIVERY, STORAGE AND HANDLING

A. Delivery of Materials:
   1. Deliver materials to job-site in new, dry, unopened and well-marked containers showing product and manufacturers name.
   2. Deliver materials in sufficient quantity to allow continuity of work.
   3. Coordinate delivery with project superintendent.

B. Do not order project materials or start work before receiving written notice to proceed. No work shall commence without signed contracts.

C. Storage of Materials:
   1. Store materials marked “KEEP FROM FREEZING” in areas where temperatures will remain above 40°F.
   2. Do not store materials in open or in contact with ground or roof surface.
   3. Store all materials on a raised platform covered with secured canvas tarpaulin (not polyethylene), top to bottom. Cover all materials when project is not in progress and

maintain the ability at all times to cover the materials when required, such as during an unanticipated rain shower.

4. Subcontractor shall assume full responsibility for the protection and safekeeping of products stored on premises.

1.07 ENVIRONMENTAL CONDITIONS

A. Environmental requirements:
   1. Do not work in rain, snow, or in presence of water.
   2. Do not work in temperatures below 40°F.
   3. Do not install materials marked “KEEP FROM FREEZING” when daily temperatures are scheduled to fall below 40°F.
   4. Do not perform masonry work below 40°F.
   5. Remove any work exposed to freezing.
   6. Coordinate with WTI superintendent when volatile materials are to be used near air ventilation intakes so owner can use some or all of the following methods to minimize disruptions to building occupants and operations:
   7. Divert air intake from work area by attaching scoops or temporary ductwork.
   8. Temporarily shut down or block air intakes.
   9. Provide make-up air or intake air from sources away from work area.

1.08 WARRANTY

A. Upon Project completion and Owner’s acceptance effective upon complete payment the Contractor shall issue a guarantee against defective workmanship for a period of 5 years.

B. Manufacturer’s standard form, in which manufacturer agrees to repair or replace sealants that fail in materials within the specified warranty period. Refer to Section 01 70 00.
   1. Silicone Sealants: 10 year
   2. Polyurethane Sealants: 5 year

PART 2 - PRODUCTS

2.01 GENERAL

A. Comply with quality control, references, specifications, and manufacturer's data. Products containing asbestos are prohibited on this project. Use only asbestos-free products.

B. Use products with personal protection. User must read container label and material safety data sheets prior to use.

2.02 ACCEPTABLE MANUFACTURER

A. Sealants (General):
   1. Tremco Inc.
   2. Momeko.
   3. Or Approved Equal by Owner.

2.03 SYSTEM COMPONENTS

A. Polyurethane Sealant:
   1. Equal to Tremco TremSEAL Pro.
   2. One part, moisture cured urethane, general purpose sealant; low modulus, non-sag resistant to UV, ozone, and moisture asbestos free.
   3. Color: As selected by Owner.

B. Silicone Sealants:
   1. Equal to Tremco Spectrum 1.
   2. One part, high performance, moist curing silicone sealant; ultra low modulus, non-sag, resistant to UV, ozone, and moisture asbestos free.

C. Primer for sealants:
   1. Primer for concrete or masonry surfaces prior to applying urethane sealants: Primer #1.
   2. Primer for metal surfaces prior to applying urethane sealants: Non-Porous Primer.
   3. Primer for non-porous materials for silicone sealants: Primer #10
   4. Primer for porous materials for silicone sealants: Primer #23

D. Masonry Sealant:
   1. Equal to Tremco Spectrum 2 sealant.
   2. High performance, medium modulus, one-component, neutral-cure silicone sealant. ASTM C920, Type S, Grade NS, Class 50, color to match adjacent materials.
   3. Provide closed cell backer rood and other accessories as recommended by manufacturer.

2.04 RELATED PRODUCTS

A. Joint backing rod, closed cell polyethylene, non-bleeding neoprene, or butyl.

PART 3 - EXECUTION

3.01 EXAMINATION

A. Verify conditions as satisfactory to receive work.

B. Do not begin work until all unsatisfactory conditions are corrected. Beginning work constitutes acceptance of conditions.

3.02 GENERAL WORKMANSHIP

A. All work performed by subcontractor shall conform to this specification.

B. The presence and activity of the manufacturer's representative, architect's representative, and/or owner's representative shall in no way relieve subcontractor of contract responsibilities or duties.

C. Substrate temperature shall be within 50°F to 110°F for product application. At no time shall temperature exceed 110°F during application and cure.

3.03 SURFACE PREPARATION

A. The surface of joints to receive sealants shall be free of all frost, condensation and moisture. Oil, grease dirt, chalk, particles of mortar, dust, loose mill scale, caulking and other foreign substances shall be removed from surfaces of joints to be in contact with the sealant. Oil and grease shall be removed with solvent and surfaces shall be wiped dry with clean clothes. All surfaces shall be ground free of existing sealants, caulking and abraded to clean mortar or stone.

B. Remove loose particles present or resulting from grinding, abrading or blast cleaning by sweeping particles out with a dry brush, blowing out joints with oil free compressed air or by vacuuming joints prior to solvent cleaning.

C. Clean only as much area that can be primed, packed and caulked in a single day.

3.04 INSTALLATION OF BACKER-ROD MATERIAL

A. When using backup material comprised of tubular or rod stock, avoid lengthwise stretching of the material. Do not twist or braid backer material.

B. Installation tool:
   1. Do not puncture the exterior skin or surface of the backer material.
   2. For installation of backup material, provide a blunt-surfaced tool of wood or plastic, having shoulders designed to ride on the adjacent finished surface and a protrusion of the required dimensions to assure uniform depth of backup material below the sealant.
   3. Do not use a screwdriver or similar tool for this purpose.
   4. Using the approved tool, smoothly and uniformly place the backup material to the depth indicated on the drawings or otherwise required, compressing the backer material 25% to 50% and securing a positive fit. Do not insert the depth of the backer material beyond 1/2".

3.05 INSTALLATION OF SEALANTS

A. Prior to start of installation of each joint, type according to the details on the drawings and verify that the required proportion of width of joint to depth of joint ration has been secured.
   1. One-part general purpose sealant joint size criteria:
      a. Minimum size of joint shall be four times the anticipated movement.
      b. Joint depth to be 1/4 inch for joints 1/4 inch to 2 inch in width.
      c. Maximum joint size approximately 1 1/4" width x 3/8" depth in a single application.

B. Equipment
   1. Apply sealant under pressure with power actuated hand gun or manually operated hand gun, or by other appropriate means.
   2. Use guns with a nozzle of proper size, and providing sufficient pressure to completely fill the joints as designed.
   3. If multi-component sealants are used, a two blade mixing paddle is required in the mixing process.

C. Thoroughly and completely mask joints where the appearance of primer or sealant on adjacent surfaces would be objectionable.

D. Temperature: Install all work of this section when substrate surface temperature is above 40°F and below 140°F unless the applicator obtains prior approval from the sealant manufacturer to install material outside of this temperature range.

E. Moisture: Do not apply work of this section on surfaces which are wet, damp, or have frost.

F. Install the sealant in strict accordance with the manufacturer's recommendations, thoroughly filling joints to the recommended width and depth.

G. Dry tool exposed joints to force material against backing material causing the caulking to obtain full surface contact with the joint interfaces. Finished joint will have a slightly concave surface, be uniform and neatly finished.

H. Cleaning up:
   1. Remove masking tape immediately after joints have been tolled.
   2. Keep clean adjacent surfaces free from excess sealant as the installation progresses, using solvent or cleaning agent recommended by the sealant manufacturer.
   3. Upon completion of the work of this section, promptly remove from the job site all debris, empty containers, and surplus material derived from this portion of the work.

3.06 ADJUSTING AND CLEANING

A. Repair of deficiencies:
   1. Installations of details noted as deficient during final inspection must be repaired and corrected by applicator, and made ready for re-inspection, within five (5) working days.

B. Clean-up:
   1. Immediately upon job completion, roof membrane, flashing surfaces, ground and surrounding areas shall be cleaned of debris.

END OF SECTION

DIVISION 9

FINISHES

BUSHEY FEIGHT MORIN ARCHITECTS INC.
473 NORTH POTOMAC STREET
HAGERSTOWN, MARYLAND 21740
301-733-5600 FAX: 301-733-5612

PART 1 GENERAL

1.01 SUMMARY

A. Section includes surface preparation and field application of paints. Paint all exposed fans, ventilators or as directed by Owner.

1.02 RELATED SECTIONS:

A. Section 04 90 00 Masonry Restoration

B. Section 05 50 00 Metal Fabrication

C. Section 07 54 10 Thermoplastic Polyolefin (TPO) Membrane Roofing

D. Section 07 62 00 Sheet Metal Flashing and Trim

E. Section 07 92 00 Joint Sealants

F. Section 23 10 00 Mechanical / Electrical General Requirements

G. Section 23 16 00 Roof Drains

1.03 REFERENCES

A. ASTM D16 - Terminology Relating to Paint, Varnish, Lacquer, and Related Products.

B. ASTM D4442 - Test Methods for Direct Moisture Content Measurement of Wood and Wood-Base Materials.

C. NACE (National Association of Corrosion Engineers) - Industrial Maintenance Painting.

D. NPCA (National Paint and Coatings Association) - Guide to U.S. Government Paint Specifications.

E. PDCA (Painting and Decorating Contractors of America) - Architectural Specifications Manual.

F. SSPC (Steel Structures Painting Council) - Steel Structures Painting Manual.

1.04 DEFINITIONS

A. Conform to ASTM D16 for interpretation of terms used in this section.

1.05 SUBMITTALS

A. Product Data: Submit data on all finishing products.

B. Samples: Submit two color chip selection charts/wheels illustrating range of colors and textures available for each surface finishing product scheduled.

C. Submit material safety data sheets for all products used.

D. Manufacturer's Installation Instructions: Submit special surface preparation procedures and substrate conditions requiring special attention.

E. Operation and Maintenance Data: Submit data on cleaning, touch-up, and repair of painted and coated surfaces.

1.06 DELIVERY, STORAGE, AND HANDLING

A. Deliver products to site in sealed and labeled containers; inspect to verify acceptability.

B. Container Label: Include manufacturer's name, type of paint, brand name, lot number, brand code, coverage, surface preparation, drying time, cleanup requirements, color designation, and instructions for mixing and reducing.

C. Paint Materials: Store at minimum ambient temperature of 45 degrees F and a maximum of 90 degrees F, in ventilated area, and as required by manufacturer's instructions.

1.07 ENVIRONMENTAL REQUIREMENTS

A. Do not apply materials when surface and ambient temperatures are outside the temperature ranges required by the paint product manufacturer.

B. Do not apply exterior coatings during rain or snow when relative humidity is outside the humidity ranges, or moisture content of surfaces exceed those required by the paint product manufacturer.

C. Minimum Application Temperatures for Latex Paints: 45 degrees F for interiors; 50 degrees F for exterior, unless required otherwise by manufacturer's instructions.

1.08 REGULATORY REQUIREMENTS

A. Conform to applicable code for flame and smoke rating requirements for finishes.

PART 2 PRODUCTS

2.01 PAINTS AND COATINGS

A. Manufacturers: Paint
1. Duron Inc.
2. Sherman Williams.
3. ICI Paint Stores
4. PPG Architectural Finishes.

B. Manufacturers: Primer Sealers
1. Duron Inc.
2. ICI Paint Stores.
3. PPG Architectural Finishes.

C. Manufacturers: Galvanized Primer
1. PPG Architectural Finishes.
2. Benjamin Moore.
3. Sherwin Williams.

D. Epoxy Paint:
1. PPG Architectural Finishes.
2. Sherwin Williams.
3. Benjamin Moore.

E. Aluminum Coating (Roof Top Equipment): Fibrated aluminum coating aluminized, heat reflective coating.

2.02 COMPONENTS

A. Coatings: Ready mixed, except field-catalyzed coatings. Prepare coatings:

1. To a soft paste consistency, capable of being readily and uniformly dispersed to a homogeneous coating.
2. For good flow and brushing properties.
3. Capable of drying or curing free of streaks or sags.

B. Accessory Materials: Linseed oil, shellac, turpentine, paint thinners and other materials not specifically indicated but required to achieve the finishes specified; commercial quality.

C. Patching Materials: Latex filler.

D. Fastener Head Cover Materials: Latex filler.

PART 3 EXECUTION

3.01 EXAMINATION

A. Verify that surfaces or substrate conditions are ready to receive Work as instructed by the product manufacturer.

B. Examine surfaces scheduled to be finished prior to commencement of work. Report any condition that may potentially affect proper application.

C. Test shop applied primer for compatibility with subsequent cover materials.

D. Coordinate with other trades, ensure all joints are sealed and caulked. Prime paint at joints when necessary before finish coats.

3.02 PREPARATION

A. Surfaces: Correct defects and clean surfaces, which affect work of this section. Remove existing coatings that exhibit surface and/or loose defects.

B. Galvanized Surfaces: Remove surface contamination and oils and wash with solvent. Apply coat of etching primer.

C. Concrete and Unit Masonry Surfaces Scheduled to Receive Paint Finish: Remove dirt, loose mortar, scale, salt or alkali powder, and other foreign matter. Remove oil and grease with a solution of tri-sodium phosphate; rinse well and allow to dry. Remove stains caused by weathering of corroding metals with a solution of sodium metasilicate after thoroughly wetting with water. Allow to dry.

D. Uncoated Steel and Iron Surfaces: Remove grease, mill scale, weld splatter, dirt, and rust. Where heavy coatings of scale are evident, remove by power tool wire brushing or sandblasting; clean by washing with solvent. Apply a treatment of phosphoric acid solution, ensuring weld joints, bolts, and nuts are similarly cleaned. Spot prime paint after repairs.

E. Shop Primed Steel Surfaces: Sand and scrape to remove loose primer and rust. Feather edges to make touch-up patches inconspicuous. Clean surfaces with solvent. Prime bare steel surfaces.

F. Interior Wood Items Scheduled to Receive Paint Finish: Wipe off dust and grit prior to priming. Seal knots, pitch streaks, and sappy sections with sealer. Fill nail holes and cracks after primer has dried; sand between coats.

3.03 EXISTING WORK

A. Extend existing paint and coatings installations using materials and methods compatible with existing installations and as specified.

3.04 APPLICATION

A. Apply products in accordance to manufacturer's instructions.

B. Do not apply finishes to surfaces that are not dry. Allow applied coats to dry before next coat is applied.

C. Apply each coat to uniform appearance. Apply each coat of paint slightly darker than preceding coat unless specified otherwise.

D. Sand wood and metal surfaces lightly between coats to achieve required finish.

E. Vacuum clean surfaces of loose particles. Use tack cloth to remove dust and particles just prior to applying next coat.

3.05 CLEANING

A. Collect waste materials that may constitute a fire hazard, place in closed metal containers, and remove daily from site.

3.06 SCHEDULE

A. Steel (Ferrous Metals) – Normal and atmospheric conditions (All structural and misc. steel).
   1. First coat touch up primer: PPG 6-212 3.6 mwf/coat.
   2. Second and third coats: PPG Speedhide all-purpose house paint. Low-gloss, oil alkyd - 4.0 mwf/coat.

B. Zinc Coated Metal - Galvanized Steel
   1. Location: All exterior zinc coated or galvanized steel miscellaneous metals and lintels.
   2. System: Urethane/Acrylic
      a. Surface: Preparation SPG-9E
      b. Primer: Pitt-Tech 90-708 @ 5.1 WFT
      c. Finish (2 coats): Manor Hall 75-line @ 3.2 WFT per coat.

C. Roof top equipment – paint all exhaust fan housings, vents, and other exposed items with roofing product equal to Fibrated Aluminum Coating. Do not paint equipment labels or data plates.

D. Ferrous Metals: (ladders if not galvanized steel)
   1. 1st Coat: Primer - Speedhide Water Base Inhibitive Metal primer 90-712 white WFT 4.8 mils.
   2. 2nd & 3rd Coat: Pitt-Glaze Acrylic-Epoxy Semi-gloss coating, 16 line, WFT 6.0 mils.

END OF SECTION

DIVISION 23

MECHANICAL

BUSHEY FEIGHT MORIN ARCHITECTS INC.
473 NORTH POTOMAC STREET
HAGERSTOWN, MARYLAND 21740
301-733-5600 FAX: 301-733-5612

PART 1 ─ GENERAL

1.01 SUMMARY

A. This section specifies requirements for the following Scope of Work:
   1. Mechanical disconnection, extension, shortening, and/or reconnection shall be performed in accordance with 2018 international Mechanical Code with applicable local amendments.
   2. Electrical disconnection, extension, shortening, and/or reconnection shall be performed in accordance with the 2017 International National Electric Code.
   3. Plumbing work shall be performed in accordance with the 2018 International Plumbing Code and the Maryland State Plumbing Regulations.
   4. Details, not shown or specified but necessary for proper installation and operation shall be included within the work as though specified herein.

1.02 RELATED DOCUMENTS

A. Drawings and contract documents, including Section 01 01 00 - Summary of Work, apply to this section. Owner will specify which mechanical units and plumbing items need to be replaced, altered, or removed.

B. Related Sections
   1. Section 02 22 50 - Demolition
   2. Section 05 31 00 - Steel Deck
   3. Section 06 06 00 - Rough Carpentry
   4. Section 07 22 00 - Roof and Deck Insulation
   5. Section 07 54 10 - Thermoplastic Polyolefin (TPO) Membrane Roofing
   6. Section 07 62 00 - Sheet Metal Flashing and Trim
   7. Section 07 92 00 - Sealants
   8. Section 09 90 00 - Paints and Coatings
   9. Section 23 16 00 - Roof Drains

1.03 SUBMITTALS

A. Submit manufacturer's product data and installation instructions.

1.04 QUALITY ASSURANCE

A. Qualification of Manufacturers:
   1. Products used in the work of this Section shall be produced by manufacturers regularly engaged in manufacture of similar items and with a history of satisfactory production acceptable to the Engineer.

B. Qualification of Contractors:
   1. Use adequate numbers of skilled workmen who are thoroughly trained and experienced in the necessary crafts and who are completely familiar with the specified requirements and the methods needed for proper installation of the work of this Section and of the work in the other required sections.
   2. Contractors are to be licensed and qualified to make mechanical installations.

C. Codes and Standards:
   1. All equipment furnished under this Specification shall be free from defects in workmanship and materials. All equipment, systems and work shall meet the requirements of the latest edition published by the following organizations as minimum standards.
      a. National Fire Protection Association.
      b. Air Moving and Conditioning Association.

c. Underwriter's Laboratories, Inc.
d. American Society of Heating, Refrigeration, Air Conditioning Engineers.
e. American National Standards Institute.
f. Local Plumbing Regulations.
g. Sheet Metal and Air Conditioning Contractors National Association.
h. Local Gas Supplier Requirements.

2. All work shall also meet the minimum requirements of codes and standards of local and state agencies having jurisdiction.

D. Include in the work, without extra cost to the Owner, any labor, materials, services, apparatus and drawings required to comply with all applicable laws, ordinances, rules and regulations, whether or not shown on Drawings and/or specified.

E. Permits and Inspections:

1. Obtain and pay for all necessary drawings, permits and certificates required by the various governing agencies having jurisdiction. Deliver to the Architect, all permits for construction before starting work and certificates of test, inspection and approval before the date of final acceptance of the job.

PART 2 ─ PRODUCTS

2.01 LINESET INSULATION

A. Flexible Elastomeric: Closed-cell, sponge- or expanded-rubber materials. Comply with ASTM C 534, Type I for tubular materials.

1. Products: Subject to compliance with requirements, provide one of the following:
   a. Aeroflex USA Inc.; Aerocel.
   b. Armacell LLC; AP Armaflex.
   c. RBX Corporation; Insul-Sheet 1800 and Insul-Tube 180.

2.02 PLUMBING MATERIALS

A. Rain Leader Piping:

1. Poly Vinyl Chloride (PVC); DWV pipe, ASTM D2665, Schedule 40, plain ends
2. Socket: ASTM D2665
3. Solvent Cements: per ASTM D2564
4. Tees, Wyes, Elbows, Etc.: ASTEM D2665, Schedule 40

B. Parapet Scupper: Watts Model RD-270, or Zurn Z-198. Comparable products as manufactured by Jay R. Smith, or Josam, may be submitted for review. Cast iron.

C. Downspout nozzle: Zurn Model Z-199, or Watts Model RD-940. Comparable product as manufactured by Jay R. Smith, or Josam may be submitted for review.

D. Downspout boot:

1. 5x4 Downspout boot, Zurn Model Z91, or Watts Model RD-980. Comparable product as manufactured by Josam or Jay R. Smith may be submitted for review.
2. 4x3 Downspout boot, Zurn Model Z192, or Watts Model RD-970. Comparable product as manufactured by Josam or Jay R. Smith may be submitted for review.
3. Round inlet and outlet downspout boot, Zurn Model Z191-RD, or comparable product as manufactured by Josam or Jay R. Smith.

E. Escutcheons: Manufactured wall, ceiling, and floor plates; deep-pattern type where required to conceal protruding fittings and sleeves.

PART 3 ─ EXECUTION

3.01 GENERAL

A. Mechanical, electrical, and associated work shall be performed by licensed tradesman as an approved contractor, pre-qualified by Frederick County Public Schools, and shall comply with the applicable code requirements.

B. Wherever possible match the existing mechanical and electrical components.

C. Handle, store, and protect equipment and materials to prevent damage before and during installation.

3.02 MECHANICAL UNITS

A. Where mechanical fans, vents, ductwork, etc…is removed from curbs to allow roofing/flashing to be installed, re-set units and re-attach all fasteners.

B. If units are damaged, replace units as necessary or repair minor dents in metal housing. Make sure all fasteners are re-installed.

C. Extend all piping or connections due to increased curb heights.

3.03 ELECTRICAL

A. Disconnect power feed to electrically powered units and terminate in a safe manner to allow roofing operations.

B. Provide new junction box in vicinity of unit if existing wiring will not provide enough slack when re-setting unit on curbs.

C. Extend wiring to unit to re-connection.

D. Re-power unit, ensure operations.

E. Scope also applicable to low voltage, communications, or other wiring to units or roof top equipment to allow proper installation of flashing conduit or wiring at roof penetrations.

3.04 PLUMBING

A. Where existing pipe vents penetrate roof, remove existing if in deteriorated condition. Install new of similar condition.

B. Where existing top of pipe is less than 12” above finished roof surface. Provide extension with coupling of similar material as existing pipe to exceed min. clearance.

C. General

1. Install cast-iron soil pipe and cast-iron soil pipe fittings according to the latest version of the CISPI “Cast Iron Soil Pipe and Fittings Handbook, 2006,” Chapter IV, “Installation of Cast Iron Soil Pipe and Fittings.”
2. Make changes in direction for drainage and vent piping using appropriate Y branches, Y branches with 1/8 bends, and long-sweep 1/4, 1/5, 1/6, 1/8, and 1/16 bends. Sanitary tees and short-sweep quarter bends may be used on vertical stacks of drainage lines where change in direction of flow is from horizontal to vertical. Make no change in direction of flow greater than 90°. Where different sizes of drainage pipes and fittings are connected, use proper size standard increasers and reducers. Reduction of the size of drainage piping in the direction of flow is prohibited.
3. Lay buried building drains beginning at low point of each system, true to grades and alignment indicated, with unbroken continuity of invert. Place hub or bell ends of piping facing upstream. Install required gaskets according to manufacturer’s recommendations for use of lubricants, cements, and other special installation requirements. Maintain swab or drag in piping and pull past each joint as completed.

4. Install drainage and vent piping at the following minimum slopes, except where another slope is indicated: Storm Building Drain: 1/8" inch per foot (1 percent).
5. Install PVC drainage pipe and fittings according to ASTM D2665.
6. Install all buried plastic pipe in accordance with ASTM D2321.
7. Joint Construction
    a. Cast-Iron Pipe and Cast-Iron Pipe Fitting Joints: Make joints according to recommendations in the latest version of the CISPI "Cast Iron Soil Pipe and Fittings Handbook, Volume I," Chapter IV, "Installation of Cast Iron Soil Pipe and Fittings."
        1) Compression Joint: Make with neoprene gasket matching class of pipe and fittings.
        2) Hubless Joint: Make with neoprene gasket and sleeve or clamp.
    b. Handling of Solvent Cements, Primers, and Cleaners: Comply with procedures in ASTM F402, for safe handling during joining of plastic pipe and fittings with solvent cements.
8. Pipe Attachments:
    a. Riser Clamps: MSS Type 8 or Type 42 for vertical runs.
    b. Adjustable Steel Clevis Hangers: MSS Type 1 for individual straight horizontal runs 100 feet and less.
    c. Adjustable Roller Hangers: MSS Type 43 for individual straight horizontal runs longer than 100 feet.
    d. Spring Cushion Rolls: MSS Type 49, where indicated, for individual straight horizontal runs longer than 100 feet.
    e. Pipe Rolls: MSS Type 44 for multiple straight horizontal runs 100 feet or longer. Support pipe rolls on trapeze.
    f. Spring Hangers: MSS Type 52 for support of base of vertical runs.

D. Drainage and Vent System Specialties
1. Cleanouts
    a. Install cleanouts in above-ground piping and building drain piping as indicated, and where not indicated, according to the following:
        1) Size same as drainage piping up to 4-inch size. Use 4-inch size for larger drainage piping.
        2) Locate at each change in direction of piping greater than 45°.
        3) Locate at minimum intervals of 50 feet for piping 4 inches and smaller and 100 feet for larger piping.
        4) Locate at base of each vertical stack.
    b. Install cleanout wall access covers, of types indicated, with frame and cover flush with finished wall, for cleanouts located in concealed piping.
    c. Install flashing flange and clamping device with each stack and cleanout passing through floors having waterproof membrane.
2. Roof Drain Installation
    a. Install roof drains at low points of roof areas, according to the roof membranes manufacturer's installation instructions.
    b. Install drain flashing collar or flange so no leakage occurs between roof drain and adjoining roofing. Maintain integrity of waterproof membranes, where penetrated.
    c. Position roof drains for easy accessibility and maintenance.
3. Plastic Pipe shall be painted with Exterior Grade Latex Paint. DO NOT USE EPOXY OR OIL BASE PAINTS ON PLASTIC PIPE.

END OF SECTION

PART 1 ─ GENERAL

1.01 SUMMARY

A. This section includes the replacement of all existing roof drains, guards, and piping; and installation of new roof drains, guards, and pipe to first elbow. Replace first elbow as well and insulate drain bowl and piping.

1.02 RELATED DOCUMENTS

A. Drawings and contract documents, including Section 01 01 00 - Summary of Work, apply to this section.

B. Related Sections
1. Section 02 22 50 - Demolition
2. Section 05 31 00 - Steel Deck
3. Section 06 06 00 - Rough Carpentry
4. Section 07 22 00 - Roof and Deck Insulation
5. Section 07 54 10 - Thermoplastic Polyolefin (TPO) Membrane Roofing
6. Section 07 62 00 - Sheet Metal Flashing and Trim
7. Section 07 92 00 - Sealants
8. Section 09 90 00 - Paints and Coatings
9. Section 23 01 10 - Mechanical / Electrical General Requirements

1.03 SUBMITTALS

A. Submit manufacturer's product data and installation instructions.

1.04 QUALITY ASSURANCE

A. Qualification of Manufacturers:
1. Products used in the work of this Section shall be produced by manufacturers regularly engaged in manufacture of similar items and with a history of satisfactory production acceptable to the Engineer.

B. Qualification of Contractors:
1. Use adequate numbers of skilled workmen who are thoroughly trained and experienced in the necessary crafts and who are completely familiar with the specified requirements and the methods needed for proper installation of the work of this Section and of the work in the other required sections.
2. Contractors are to be licensed and qualified to make mechanical installations.

C. Codes and Standards:
1. All equipment furnished under this Specification shall be free from defects in workmanship and materials. All equipment, systems and work shall meet the requirements of the latest edition published by the following organizations as minimum standards.
   a. National Fire Protection Association.
   b. Underwriter's Laboratories, Inc.
   c. American National Standards Institute.
   d. Local Plumbing Regulations.
   e. International Plumbing Code (IPC) 2015
   f. Local Gas Supplier Requirements.
2. All work shall also meet the minimum requirements of codes and standards of local and state agencies having jurisdiction.

D. Include in the work, without extra cost to the Owner, any labor, materials, services, apparatus and drawings required to comply with all applicable laws, ordinances, rules and regulations, whether or not shown on Drawings and/or specified.

E. Permits and Inspections:
1. Obtain and pay for all necessary drawings, permits and certificates required by the various governing agencies having jurisdiction. Deliver to the Architect, all permits for construction before starting work and certificates of test, inspection and approval before the date of final acceptance of the job.

PART 2 ─ PRODUCTS

2.01 MANUFACTURERS

A. Manufacturers: Provide prefabricated roof specialties fabricated by one of the following:
1. Jay R. Smith Mfg. Co.
2. Zurn Industries, Inc.
3. Olympic Mfg. Group.
4. Approved equal by Owner.

2.02 ROOF DRAINS

A. New Roof Drain Bowl Components:
1. Large size cast iron roof drain bowl assembly and related plumbing connections.
a. Standard: ASME A112.21.2M.
2. Fasteners: Metal compatible with material and substrate being fastened.
3. Metal Accessories: Sheet metal strips, clamps, anchoring devices, and similar accessory units required for installation; matching or compatible with material being installed.

B. Drain Bowl Metal Flashings:
1. Lead Sheet (N/A): ASTM B 749, Type L51121, copper bearing, with the following minimum weights and thicknesses, unless otherwise indicated - 4.0-lb/sq. ft.
2. Copper Sheet: ASTM B 152/B 152M, of the following minimum weights and thicknesses, unless otherwise indicated - 12-oz./sq. ft.
3. As recommended by roofing system manufacturer.

C. Piping: Match existing conditions for size and type of material.

2.03 INSULATION

A. Insulate new drain bowl and piping components.
1. New roof drains and drain pipes shall be insulated with a minimum of one inch (1") thick Fiber Glass Pipe insulation.
2. Pipe insulation shall be manufactured by John-Manville, Owens-Corning, or approved equal. Each assembly shall meet NFPA 255 requirements; not exceeding a flame spread rating of 25 or a smoke development of 50, except as otherwise specified.
3. Pipe insulation shall be factory molded tubular insulation with factory-applied jacket as specified below.
4. Type I, one inch (1") thick, three (3) pounds density fibrous glass, 35 degrees F to 360 degrees F with tough white Kraft paper as service jacket and 0.03 aluminum, foil vapor barrier.
5. All elbows and fittings shall be insulated and then covered with Zeston type pre-molded covers.

PART 3 ─ EXECUTION

3.01 EXAMINATION

A. Verify that the dimensions are correct, and substrate is in proper condition for installation. Correct unsatisfactory conditions before proceeding with installation.

B. Verify elevation of drain to provide positive drainage.
   1. Verify difference in insulation height between existing and specified insulation does require lowering or raising of existing drain(s).
   2. If existing drains are raised above deck level, drains shall be lowered to create sump area if new insulation thickness does not accommodate for a sump.
   3. Raise or lower roof drain bowl assemblies as required to match the new roof system elevation. Work shall include plumbing connections and accessories.

3.02 PREPARATION

A. Remove bitumen, gravel, debris, adhesives, etc., from existing drain and pipe inlet. Ensure that surface of drain and pipe inlet is clean and dry; employ hot air gun if necessary to remove moisture. Verify that I.D. of existing drain does not exceed O.D. of new outlet by more than 1/4 inch.

B. Verify that deck opening is sufficient to accommodate the O.D. of connector.

3.03 ROOF DRAIN INSTALLATION

A. Install drain components per manufacturer's written instructions.

B. Install roof drains at low points of roof areas according to roof membrane manufacturer's written installation instructions.

C. Install drain bowl flashing collar or flange so that there will be no leakage between drain and adjoining roofing. Maintain integrity of waterproof membranes where penetrated. Where possible, position roof drains for easy access and maintenance.

3.04 CLEANING

A. Flush all drains to verify free flowing: The roofing contractor is responsible for ensuring all roof drains included in the specified roof replacement work are free flowing. Flush drains to verify free flowing prior to the project start and at the project completion. Contractor shall notify Owner if roof drains are found slow flowing or inoperative prior to the project start.

END OF SECTION

FCPS:
LINCOLN 'A' FACILITY
ROOF REPLACEMENT

200 MADISON STREET
FREDERICK, MARYLAND 21701

JANUARY 14, 2021
FREDERICK COUNTY PUBLIC SCHOOLS
191 S. EAST STREET
FREDERICK, MD 21701

FCPS BID NO. 21C5
PSC# 10.003.21SR

DRAWING INDEX

CS-1 COVER SHEET

ARCHITECTURAL:

A1.1 ROOF PLAN / NOTES
A1.2 ROOF DETAILS
A1.3 ROOF DETAILS

CODE REQUIREMENTS

NFPA 101	2018 w/ AMENDMENTS
IBC	2018
IECC	2018
NEC	2018
IPC	2017
MAC	2012 (COMAR)
NSPC	2018
DGS PROCEDURE MANUAL	2019
MD ACCESSIBILITY ACT (ADA STANDARDS)	2010

ARCHITECTS

BFM

BUSHEY FEIGHT MORIN ARCHITECTS

473 NORTH POTOMAC STREET
HAGERSTOWN, MARYLAND 21740
(301)733-5600 FAX (301)733-5612
BFMARCHITECTS.COM

SITE LOCATION

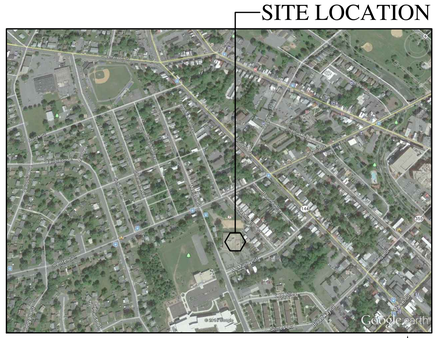

VICINITY MAP
NOT TO SCALE

PROFESSIONAL CERTIFICATION

These contract documents for the FCPS: LINCOLN 'A' FACILITY were prepared under my supervision and to the best of my knowledge, information and belief, they comply with the relevant building codes of the State of Maryland.

/s/ (date)

Maryland Registration No. 10011 Expiration Date 7.7.22

SITE LOCATION

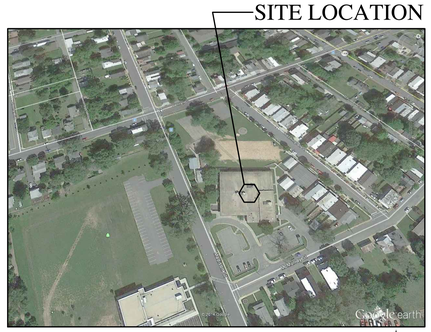

LOCATION MAP
NOT TO SCALE

JANUARY 14, 2021
BFM # 20045
PSC No. 10.003.21SR

BFM BUSHEY FEIGHT MORIN ARCHITECTS
473 NORTH POTOMAC STREET, HAGERSTOWN, MD 21740
BFMARCHITECTS.COM · 301-733-5600 · FAX 301-733-5612

FCPS: LINCOLN 'A' FACILITY
ROOF REPLACEMENT
FREDERICK, MARYLAND

COVER SHEET
CS.1
SHEET 1 OF 1
DATE : 01.14.21

NOTES APPLY TO ALL ROOF PLANS & TO OTHER DRAWINGS AS NOTED.

NEW SINGLE-PLY ROOFING

1. CONTRACTOR SHALL REMOVE ALL CONSTRUCTION DEBRIS AND CLEAN ASPHALT RELATED PRODUCTS (NEW OR EXISTING) FROM ALL ADJ. SURFACES PRIOR TO FINAL INSPECTION.
2. PROVIDE ADEQUATE PROTECTION OF ALL ROOF DECKS DURING EXPOSURE.
3. NOT USED
4. TRIM ANY TREES THAT OVERHANG ROOF BACK BEYOND EDGE OF ROOF LINE.
5. PROVIDE STAINLESS STEEL FITTINGS AT ALL CONDENSERS.
6. ALL WORK TO BE IN ACCORDANCE WITH IBC 1507.10 @ ASTM E108
7. THE ENTIRE NEW ROOFING SYSTEM (INCLUDING FLASHINGS, TRIM, & ROOF WORK RELATED TO MECHANICAL, PLUMBING, AND ELECTRICAL) SHALL BE COVERED BY THE APPLICABLE SPECIFIED WARRANTY.
8. ROOF SLOPES- PROVIDE FINISHED SLOPE AS NOTED ON THE ROOF PLAN. (1/4" PER 1'-0")
9. SLOPING DECK SINGLE-PLY ROOF SYSTEM- REFER TO DETAIL 2/A1.2
10. LEVEL DECK SINGLE-PLY ROOF SYSTEM - REFER TO DETAIL 1/A1.2. PROVIDE TAPERED INSULATION OVER BASE INSULATION FOR A MINIMUM 1/4 in. PER FT. SLOPE. (U.N.O.)
11. CRICKETS, BACK SLOPES, & SADDLES - PROVIDE TAPERED INSULATION CRICKETS WITH A MINIMUM BACK SLOPE TWICE MAIN SLOPE. CONFIGURE AS SHOWN ON THE ROOF PLAN TO DIRECT WATER TO THE ROOF DRAINS OR SCUPPERS. WHERE POSSIBLE, CRICKETS HAVE BEEN SIZED IN MODULES OF FOUR (4) FOOT WIDTHS. PROVIDE TAPERED EDGE STRIPS OF THE SAME SLOPE AS THE TAPERED INSULATION AS REQUIRED TO MAKE A SMOOTH TRANSITION FROM THE CRICKET TO THE ROOF SURFACE (NO VERTICAL JOGS).
12. BASE FLASHING FOR THIS PROJECT WILL BE SINGLE PLY MEMBRANE.
   - VERIFY THAT THE SINGLE-PLY MEMBRANE IS SUITED FOR INSTALLATION IN CONTACT WITH ASPHALT BASED PRODUCTS.
   - APPLY THE SINGLE-PLY MEMBRANE BASE FLASHING TO THE CURB SURFACE W/ THE WHITE SIDE OUT.
   - STRIP OVER ALL SPLICES.
   - MEMBRANE FLASHING ADHERED DIRECTLY TO MASONRY WALLS - VERIFY THIS IS ACCEPTABLE TO THE ROOFING MANUFACTURER FOR THE WARRANTY SPECIFIED. (IF NOT, NOTIFY THE ARCHITECT OF THE MANUFACTURER'S REQUIREMENTS.) CLEAN & SMOOTH THE MASONRY (ESP. @ THE JOINTS). SECURE & ADHERE THE MEMBRANE PER THE MANUFACTURER'S REQUIREMENTS.
   - EXTEND THE SINGLE-PLY MEMBRANE BASE FLASHING ABOVE THE NEW CANT AS FAR AS ALLOWED BY THE ROOFING MANUFACTURER. IF THE HEIGHT OF THE BASE FLASHING MUST EXCEED THE FLASHING MANUFACTURER'S RECOMMENDED LIMITS, INTERRUPT THE FLASHING MEMBRANE & PROVIDE A TERMINATION BAR & SURFACE MOUNTED METAL APRON/COUNTER FLASHING. PROVIDE ADDITIONAL MEMBRANE ABOVE, LAPPING OVER THE COUNTER FLASHING, AND EXTENDING OVER THE PARAPET AS DESCRIBED BELOW. SECURE PER THE MANUFACTURER'S RECOMMENDATIONS.
13. NEW ROOF EDGE -
   - SEE DETAILS FOR GENERAL CONFIGURATION.
   - ROOF EDGE IS TO BE HELD AT CONSTANT HEIGHT/ELEVATION AT EACH ROOF DETERMINED BY MAXIMUM THICKNESS OF TAPERED INSULATION.
   - PROVIDE NEW TAPERED INSULATION BACK SLOPE OR TAPERED EDGE STRIPS AS REQUIRED TO BRING THE ROOF SURFACE FLUSH w/ THE TOP OF WD. BLOCKING.
   - EXTEND THE NEW MEMBRANE BASE FLASHING OVER BLOCKING & DOWN FACE OF WALL. SEAL TO VERTICAL SURFACE.
14. PARAPETS & COPING (TYPICAL)
   - MAKE ADJUSTMENTS TO THE FOLLOWING BASED ON THE HEIGHT OF THE PARAPET AND THE ROOFING MFR'S. RECOMMENDATIONS.
   - SEE DETAILS FOR FLASHING @ THE BASE OF THE WALL.
   - EXTEND ROOFING PLIES ABOVE THE TOP OF THE CANT A MINIMUM OF 4" OR AS REQUIRED BY THE WARRANTY.
   - PROVIDE SINGLE-PLY MEMBRANE BASE FLASHING EXTENDING UP THE BACK SIDE, OVER THE TOP, & DOWN THE FACE OF THE PARAPET PER DETAILS. SECURE PER THE FLASHING MANUFACTURER'S RECOMMENDATIONS. SEAL THE FLASHING TO THE CURB BELOW THE BLOCKING & COVER WITH THE COPING.
   - PROVIDE METAL COPING INCLUDING CONTINUOUS CLEATS (BOTH SIDES) & P.T. BLOCKING PER DETAILS. PROVIDE BUTT JOINTS IN COPING w/ BLIND SPLICE PLATES. PROVIDE FOR EXPANSION & CONTRACTION PER THE SMACNA MANUAL (LATEST EDITION).
15. EXPANSION JOINT - DECK TO DECK - RAISED WOOD CURB -
   - SEE ROOF PLAN FOR LOCATION.
   - PROVIDE ROOFING INCLUDING AN EXPANSION JOINT COVER & P.T. WOOD CURBS PER DETAILS. VERIFY TOP OF BASE FLASHING IS 10" MIN. ABOVE THE NEW ROOF SURFACE.
   - PROVIDE THIS EXPANSION JOINT FOR THE ROOFING EVEN IF NOT REQUIRED FOR BUILDING EXPANSION/CONTRACTION.
16. ROOFING @ VERTICAL NON-LOAD BEARING WALL- PROVIDE EXPANSION JOINT STYLE DETAIL. CONDITIONS ABOVE THE CANT VARY. VERIFY & COORDINATE.
17. ROOFING @ VERTICAL LOAD BEARING WALL (WHERE ROOF DECK IS SUPPORTED BY WALL)- PROVIDE ROOFING PER DETAILS. CONDITIONS ABOVE THE CANT VARY. VERIFY & COORDINATE. VERIFY TOP OF SINGLE PLY MEMBRANE IS 10" MIN. ABOVE THE NEW ROOF SURFACE.
18. EXPANSION JOINT - DECK TO WALL STYLE AT MASONRY WALL-
   - SEE ROOF PLAN FOR LOCATION
   - NOTE THAT SURFACE LEVELS MAY VARY SIGNIFICANTLY IN HEIGHT
   - PROVIDE A DECK TO WALL EXP. JT. (incl. MTL COVER) PER DETAILS
19. (19) EXPANSION JOINT - DECK TO DECK - RAISED WOOD CURB-
   - SEE ROOF PLAN FOR LOCATION
   - PROVIDE ROOFING INCLUDING AN EXPANSION JOINT COVER & P.T. WOOD CURBS PER DETAILS. VERIFY TOP OF BASE FLASHING IS 10" ABOVE NEW ROOF SURFACE
   - PROVIDE THIS EXPANSION JOINT FOR THE ROOFING EVEN IF NOT REQUIRED FOR BUILDING EXPANSION/CONTRACTION
20. (20) REPLACEMENT ROOF DRAIN AND SUMP - REDUCE THE INSULATION THICKNESS AS REQUIRED TO PROVIDE A 2' X 2' SUMP COMPOSED OF TAPERED INSULATION & TAPERED EDGE STRIPS. COORDINATE W/ PLUMBING.
21. HEIGHT ABOVE ROOF SURFACE FOR TERMINATION OF BASE FLASHING AT WALLS & AT CURB MOUNTED AND OTHER ROOFTOP EQUIPMENT SHALL BE 10" MINIMUM & AS REQUIRED FOR THE WARRANTY SPECIFIED FROM THE TOP OF THE NEW ROOF SURFACE TO THE TOP OF THE FLASHING. SET CURB HEIGHTS ACCORDINGLY.
22. (22) CURB MOUNTED ROOF TOP EQUIPMENT - COORDINATE WITH MECHANICAL SUB AS NEEDED. MAKE ALL LINE, PIPE, DUCT, & CONDUIT PENETRATIONS INSIDE THE CURB (INCLUDING CONDUITS FOR CONVENIENCE OUTLETS). IF THAT IS NOT POSSIBLE, PROVIDE DUCT CURBS, GOOSENECKS, AND PENETRATION POCKETS AS REQUIRED. (SEE OTHER ROOF NOTES.) ON THE UPHILL SIDE(S) OF THE CURB, PROVIDE CRICKETS WITH A MINIMUM BACK SLOPE TWICE THE MAIN SLOPE (EVEN IF NOT SHOWN). AT CONDENSATE LINES DRAINING ONTO THE ROOF SURFACE, PROVIDE CONC. SPLASH BLOCKS.
23. (23) COLD ROUND VENTS OR PIPES THROUGH THE ROOF - VERIFY TOP IS 10" MINIMUM ABOVE THE NEW ROOF SURFACE. EXTEND AS REQUIRED. SEAL LEAD FLASHING TO INSIDE OF PIPE.
24. GOOSENECKS - MAKE ALL LINE, WIRE, CONDUIT, ETC... PENETRATIONS OUTSIDE OF CURBS THROUGH GOOSENECKS IF AT ALL POSSIBLE MOUNT GOOSENECKS ON CURBS. COORDINATE w/ MECHANICAL & ELECTRICAL.
25. PIPE PORTALS & CURBS - FOR PIPE CONNECTIONS PROVIDE PIPE PORTALS (INCLUDING COVERS & CAPS) MOUNTED ON CURBS. COORDINATE WITH MECHANICAL AND PLUMBING.
26. (26) PENETRATION POCKETS - ONLY WHERE GOOSENECKS OR PIPE PORTALS ARE IMPOSSIBLE, PROVIDE SEALER POCKETS W/ HOODS PER DETAILS. REVIEW THESE SITUATIONS WITH THE OWNER AND ARCHITECT.
27. ROOF LADDER - NOT USED
28. WALK PADS - LOCATE AS FOLLOW. PROVIDE w/ CONNECTIONS ACROSS ROOF AREAS AS NEEDED COORDINATE IN FIELD w/ OWNER COORDINATE PADS WITH ROOF SLOPES AND CRICKETS. LOCATE PADS TO ALLOW FOR FLOW OF WATER DOWN SLOPE ESPECIALLY AT VALLEYS. INTERRUPT PADS ON AN ANGLE AT VALLEYS. NOTIFY ARCHITECT IF WALKWAY LAYOUT SHOWN IMPEDES WATER FLOW & MAKE ADJUSTMENTS AS REQUIRED. PROVIDE EXTRA PADS AT BOTH SIDES OF EXPANSION JOINT, & ROOF HATCH, RTU, & EQUIPMENT AS SHOWN.
29. (29) TERMINATION ALONG A VERTICAL EDGE - PROVIDE PER MANUFACTURER'S DETAIL. PROVIDE MTL. RECEIVER/COUNTERFLASHING (incl. BACKER ROD & SEALANT) TO COVER THE TERMINATION. INSULATION & COUNTERFLASHING SHALL NOT EXCEED HEIGHT OF EXISTING THRU WALL FLASHING. VERIFY & COORDINATE IN FIELD. MODIFY TAPERED INSULATION, CRICKET OR SLOPE ACCORDINGLY. NOTIFY OWNER/ARCHITECT OF POTENTIAL CONFLICTS.
30. (30) ROOF HATCH - EXTEND EXIST. LADDER AS REQ'D FOR NEW ROOF HATCH CURB. SEE DTL 10/A1.2 FOR HATCH DTL
31. (31) RAIL MOUNTED ROOF TOP EQUIPMENT ON CURB STYLE RAILS SITTING DIRECTLY ON ROOF DECK - PROVIDE ROOFING SIMILAR TO ROOF NOTE 11. PROVIDE PENETRATION POCKETS AND DUCT CURBS AS REQ'D. PROVIDE CONC. SPLASH BLOCKS AT CONDENSATE LINES DRAINING ONTO ROOF SURFACE
32. (32) OVERFLOW SCUPPER - MINIMUM DIMENSION OF THE OPENING SHALL BE 4". SEE DTL. 12/A1.2

ROOFING DEMO NOTES -

A. REMOVE (E) ROOF AND ALL ASSOCIATED FLASHING, BLOCKING, ETC., DOWN TO (E) DECK, AND DISPOSE OF IN ACCORDANCE WITH ALL APPLICABLE REQUIREMENTS.
B. INSPECT (E) DECK - REPLACE ANY & ALL DAMAGED SECTIONS; PATCH & REPAIR AT UNUSED OPENINGS & REPAIR VAPOR BARRIER.
C. PROTECT ALL (E) EQUIPMENT & FINISHES TO REMAIN.
D. PROTECT ALL BUILDING EXITS & PATHWAYS BELOW FROM CONSTRUCTION DEBRIS DURING WORK.
E. REMOVE ALL WASTE DAILY FROM SITE OR PLACE INTO OWNER APPROVED CONTAINERS.

ROOFING NOTES -

A. CONTRACTOR SHALL VERIFY ALL CONDITIONS IN THE FIELD.& NOTE ANY INACCURACIES ON AS-BUILTS.
B. ROOF ELEVATIONS - ALL ELEVATIONS ABOVE BENCHMARK ARE APPROXIMATE. VERIFY ACTUAL CONDITIONS IN THE FIELD.
C. PROJECT SHALL BE PHASED DUE TO BUILDING BEING OCCUPIED. CONTRACTOR SHALL COORDINATE w/ FCPS & SCHOOL ADMIN, TO SCHEDULE; MAY REQUIRE AFTER HOURS WORK.
D. PROTECT EXISTING INTERIOR FINISHES PARTICULARLY WHERE EXISTING CEILINGS ARE EXPOSED ROOF DECK. PROTECT AREAS BELOW PER SPEC SECTION.
E. REMOVE ANY HAZARDOUS MATERIALS DUE TO ROOF REPLACEMENT WORK INCLUDING FLASHING, PIPE INSULATION, CEILING TILES ETC. PROVIDE INDUSTRIAL HYGIENIST DURING REMOVAL TO MONITOR & TEST FOR CLEARANCE.
F. ALL WORK RELATED TO THE ROOFING SYSTEMS SHALL BE PERFORMED BY THE APPLICATOR OR BY PARTIES ACCEPTABLE TO THE ROOFING MANUFACTURERS AND QUALIFIED TO INSTALL ROOFING WITH THE SPECIFIED WARRANTIES.
G. COORDINATE ROOFING WITH OTHER WORK, ESPECIALLY MECHANICAL, PLUMBING, AND ELECTRICAL.
H. LOCATIONS OF ROOF TOP EQUIPMENT SHOWN ARE APPROXIMATE. COORDINATE WITH ACTUAL FIELD CONDITIONS. VERIFY IN THE FIELD. PROVIDE ROOFING AS REQUIRED TO ACCOMMODATE THE EQUIPMENT INSTALLED.
I. BLOCKING - PROVIDE ALL NEW PRESSURE TREATED - 2 x 6 MIN. BLOCKING, UNLESS NOTED OTHERWISE.
1. CONTRACTOR SHALL REMOVE ALL CONSTRUCTION DEBRIS AND CLEAN ASPHALT RELATED PRODUCTS (NEW OR EXISTING) FROM ALL ADJ. SURFACES PRIOR TO FINAL INSPECTION.
2. PROVIDE ADEQUATE PROTECTION OF ALL ROOF DECKS DURING EXPOSURE.
3. REPAIR ALL DENTED OR DAMAGED EXHAUST FANS/ EQUIPMENT - NOTE EXISTING FANS RECENTLY REPLACED
4. TRIM ANY TREES THAT OVERHANG ROOF BACK BEYOND EDGE OF ROOF LINE.
5. PROVIDE STAINLESS STEEL FITTINGS AT ALL CONDENSERS.

NOTE: INSULATION TO HAVE A MIN. AVERAGE R VALUE OF 38

NOTE: CAPPED VENTS (CV) ARE TO BE REMOVED WHEN POSSIBLE. PATCH (E) ROOF DECK AS REQ'D.

NOTE: COPING WIDTHS VARY. VERIFY DIMENSIONS IN FIELD.

LEGEND

Symbol	Description
TAPERED INSULATION OR SLOPING STRUCTURE SLOPE 1/4" /FT. - TYP.	DIRECTION OF MAIN ROOF SLOPES PROVIDED BY SLOPING STRUCTURE AND/OR TAPERED INSULATION
(roof drain symbol)	COMBINATION ROOF DRAIN & OVERFLOW DRAIN W/ 4' X 4' MIN. SUMP - SEE DETAIL 6/A1.2
○ V	VENT THRU ROOF - SEE DTLS. 8/A1.2
○ A.P.	ANCHOR POINT -REMOVE ALL (E) NOT IN USE -IF UNABLE TO BE REMOVED, DETAIL PER 9/A1.2
□ ANT.	ANTENNA BASE -REMOVE ALL (E) NOT IN USE -IF UNABLE TO BE REMOVED, DETAIL PER 9/A1.2
□ P.P	PIPE PORTAL/PITCH POCKET - DETAIL PER 9/A1.2
(walkway pads symbol)	WALKWAY PADS -SEE DETAIL 14-15/A1.2
#"	APPROXIMATE HEIGHT OF TAPERED INSULATION ABOVE BASE INSULATION AT A GIVEN POINT
(1)	CORE SAMPLE (7 TOTAL)

ROOF AREAS	
AREA A	17,237
AREA B	3,758
TOTAL S.F.	20,995

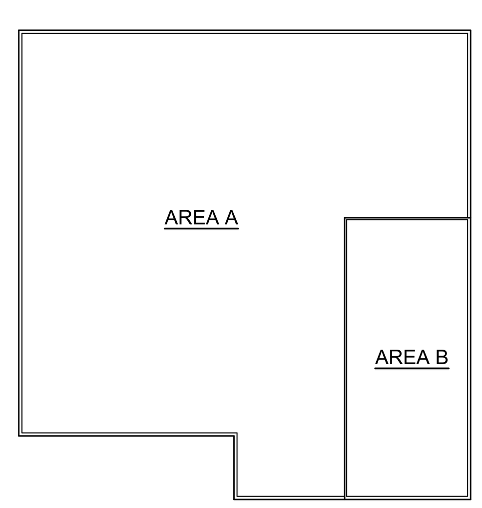

KEY PLAN

N.T.S.

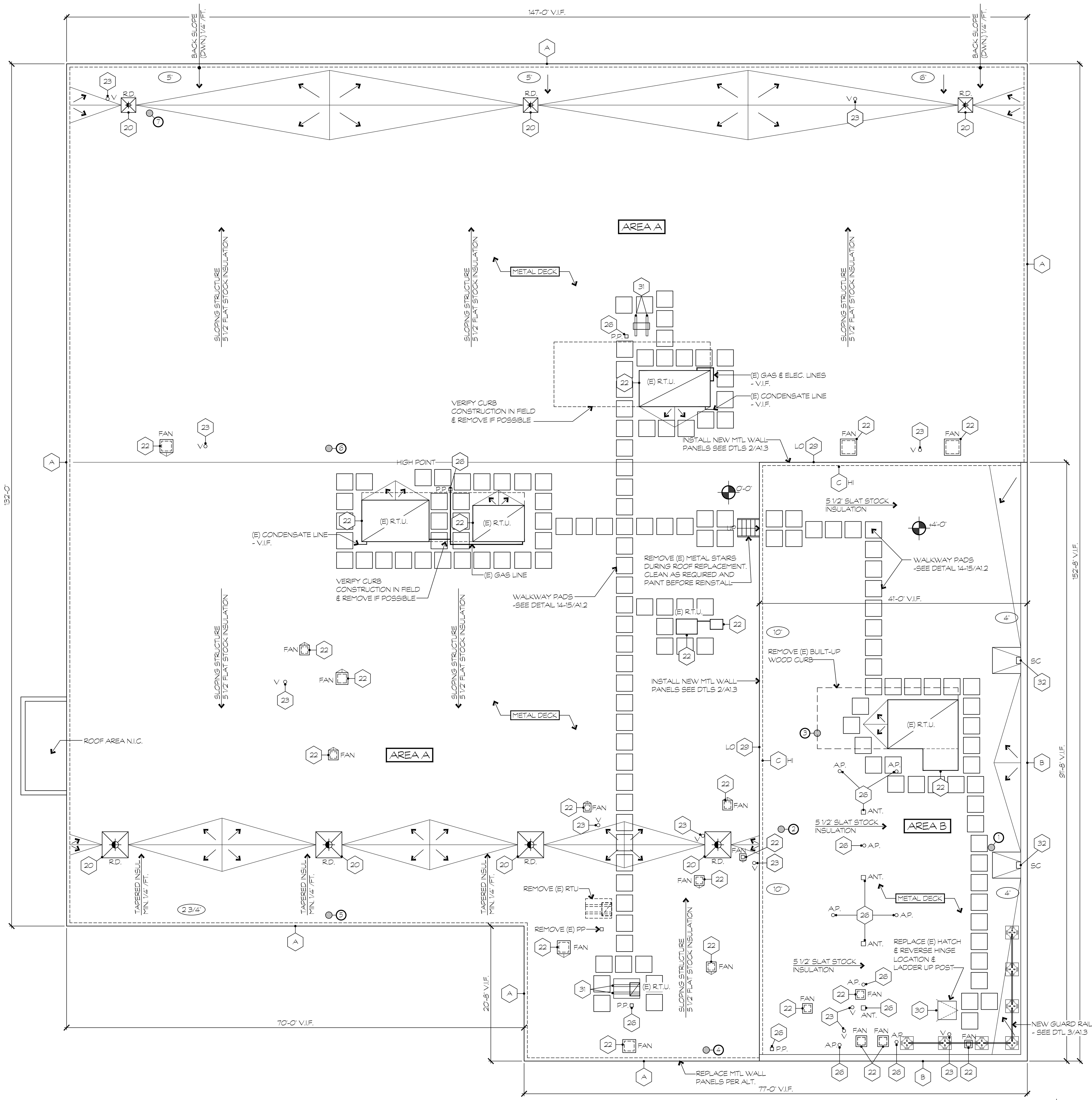

ROOF PLAN

1/8" = 1'-0"

1/8" = 1'-0"

SCALE 5 0 5 10 15 20 FEET

1 / A1.1

DRAWING INTENT IS TO INDICATE GENERAL ARRANGEMENT, DESIGN AND INTENT OF WORK IS PARTLY DIAGRAMMATIC. IT SHALL NOT BE SCALED FOR ROUGH-IN MEASUREMENTS OR SERVE AS ERECTION SHOP DRAWINGS. CONTRACTOR IS RESPONSIBLE FOR VERIFICATION OF DIMENSIONS

I CERTIFY THAT THESE DOCUMENTS WERE PREPARED OR APPROVED BY ME, AND THAT I AM A DULY LICENSED ARCHITECT UNDER THE LAWS OF THE STATE OF MARYLAND.

LICENSE No. 10011

EXPIRATION DATE 7.7.22

BFM

BUSHEY FEIGHT MORIN ARCHITECTS

473 NORTH POTOMAC STREET, HAGERSTOWN, MD 21740

BFMARCHITECTS.COM : 301-733-5600 : FAX 301-733-5612

© 2021 , BUSHEY FEIGHT MORIN ARCHITECTS, INC.

BFM# 20045

FCPS: LINCOLN 'A' FACILITY ROOF REPLACEMENT

ROOF PLAN / NOTES

A1.1

1 OF SHEETS

DATE : 01.14.21

XREFS: TITLEBL

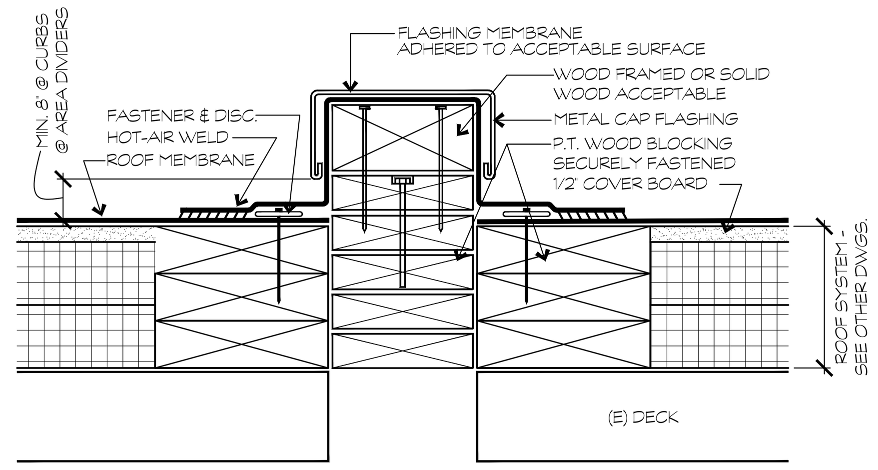

NOTES:
1) NAILERS SHALL BE SECURELY ANCHORED TO THE DECK TO RESIST A FORCE OF 300 POUNDS PER LINEAL FOOT IN ANY DIRECTION.
2) VAPOR BARRIER SHALL BE SEALED AT EDGES

31 **TYPICAL EQUIP. SUPPORT/ CURB DETAIL** 12/A1.2
NO SCALE

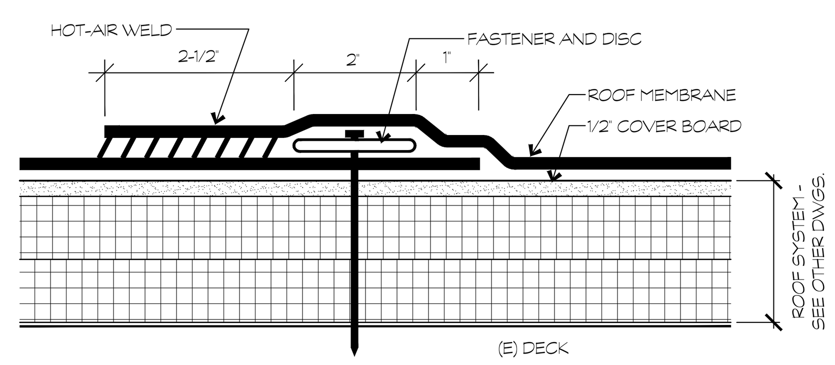

NOTE: VAPOR BARRIER SHALL BE SEALED AT OVERLAPS AND PENETRATIONS.

MEMBRANE SPLICE 16/A1.4
3" = 1'-0"

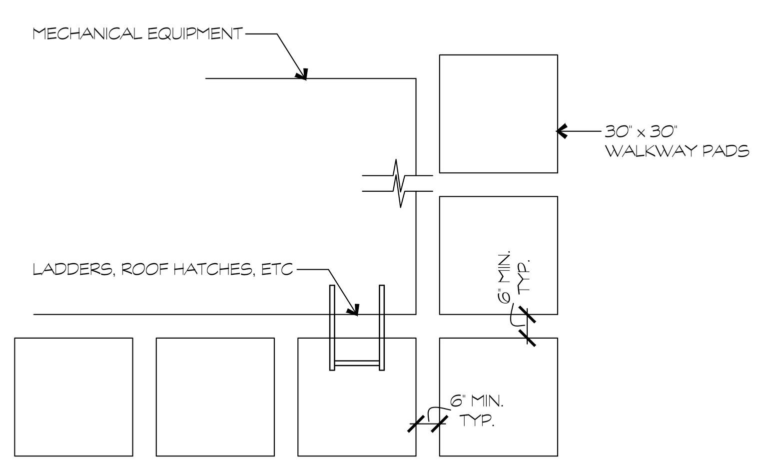

WALKWAY PAD LOCATION DET. 15/A1.2
NOT TO SCALE

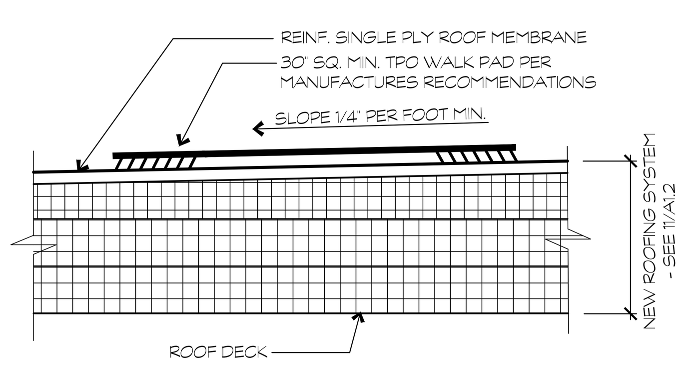

TYPICAL WALK PAD DETAIL 14/A1.2
3" = 1'-0"

NOTES:
1. TREATED WOOD NAILERS - INSTALL ONLY AT SCUPPERS TO SECURE METAL SLEEVES AND EXTEND PAST THE TOTAL WIDTH OF THE METAL SLEEVE FLANGE.
2. TAPER NEW ROOFING SYSTEM UP OR DOWN TO SCUPPER AS REQUIRED.
3. METAL SCUPPER BOX MUST HAVE CONTINUOUS SIDES; METAL FLANGE MUST BE CONTINUOUS WITH ROUNDED CORNERS.
4. INSTALL WATER CUT-OFF MASTIC UNDER CONSTANT COMPRESSION.
5. PROVIDE A MIN. 2" (5 cm) FLASHING SPLICE PAST THE NAIL HEAD ON THE METAL FLANGE OF THE SCUPPER.
6. SET THE THE MAXIMUM HEIGHT OF THE SCUPPER ABOVE THE LOW POINT OF THE ROOF SHALL BE 3" PER CODE & STRUCTURAL CAPACITY.

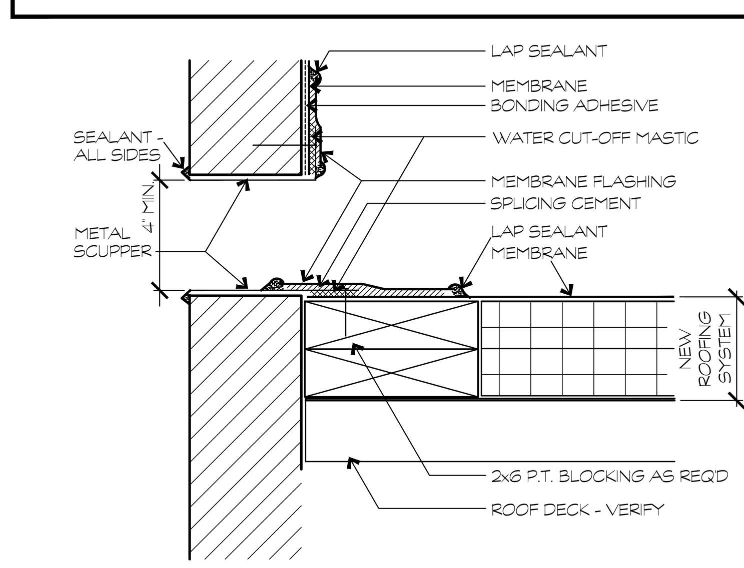

32 **SCUPPER DETAIL** 13/A1.2
3" = 1'-0"

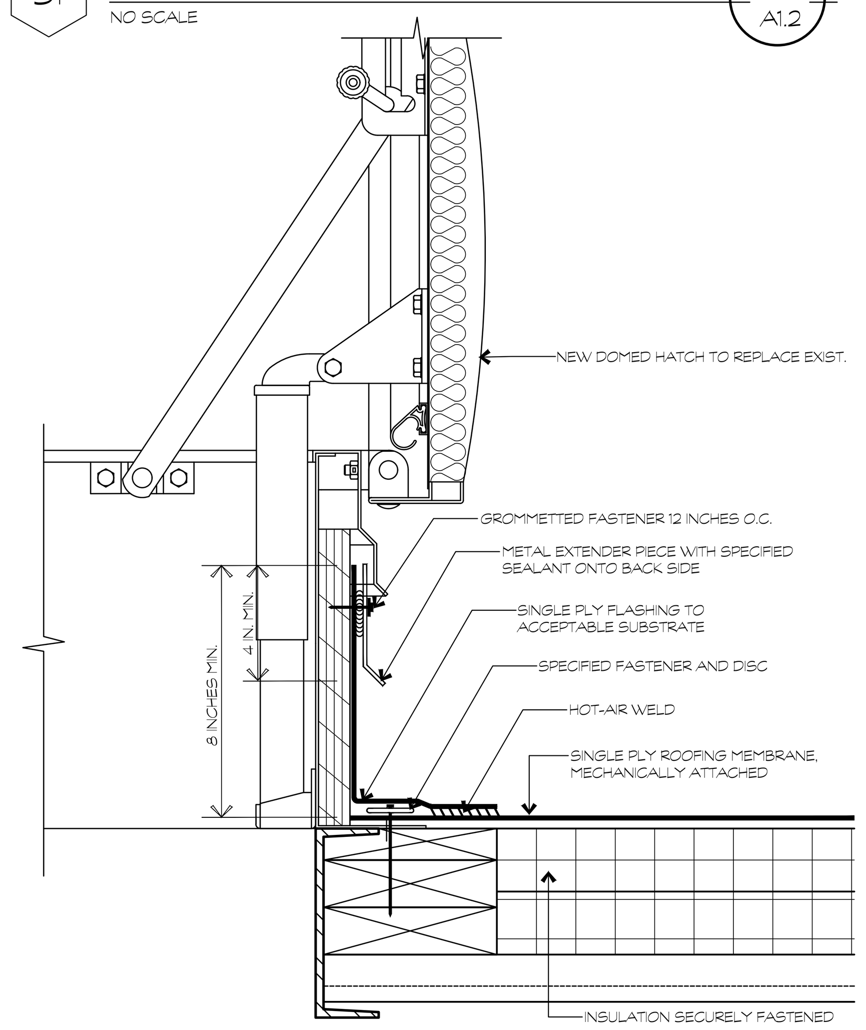

NOTE:
METAL EXTENDER PIECE IS REQUIRED IF HATCH COUNTERFLASHING IS CONTAMINATED AND/OR COUNTERFLASHING FASCIA IS LESS THAN 4 INCHES WIDE. FASTENED 12 INCHES O.C. W/ GROMMETTED FASTENER.

30 **TYP. FLASHING @ ROOF HATCH** 11/A1.2
3" = 1'-0"

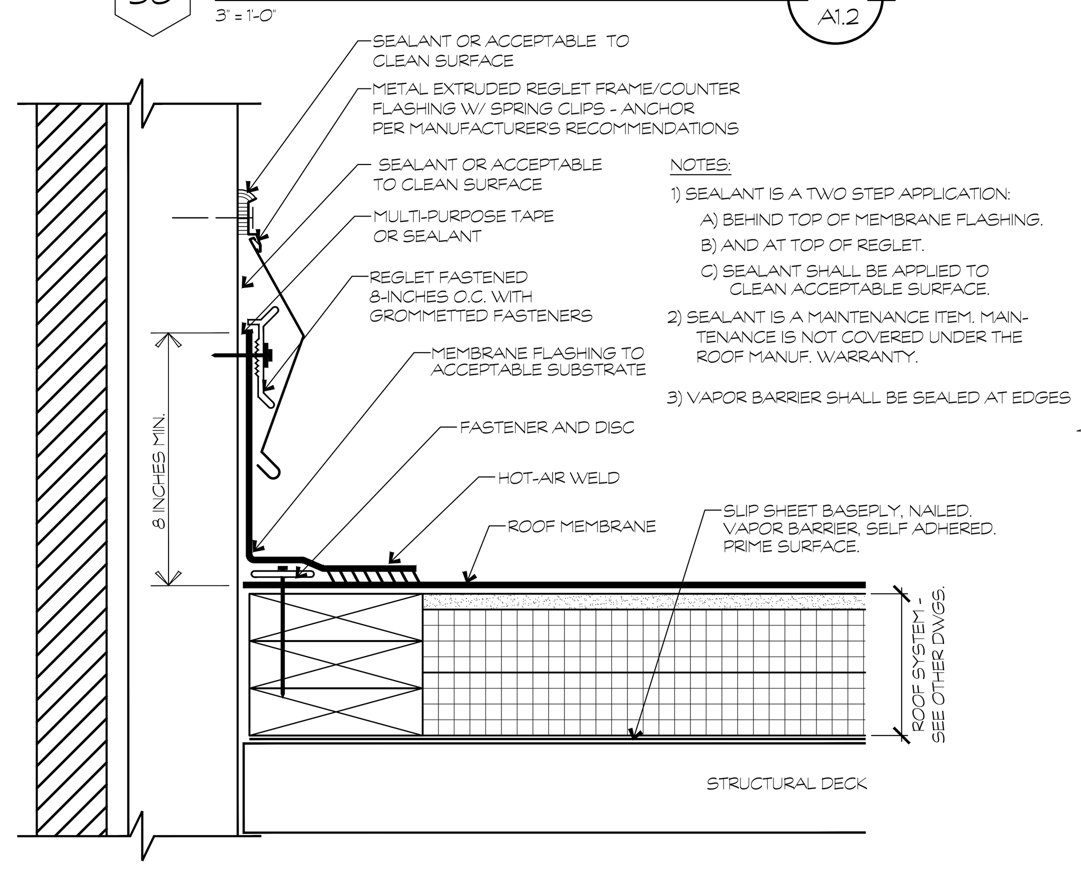

NOTES:
1) SEALANT IS A TWO STEP APPLICATION:
A) BEHIND TOP OF MEMBRANE FLASHING.
B) AND AT TOP OF REGLET.
C) SEALANT SHALL BE APPLIED TO CLEAN ACCEPTABLE SURFACE.
2) SEALANT IS A MAINTENANCE ITEM. MAINTENANCE IS NOT COVERED UNDER THE ROOF MANUF. WARRANTY.
3) VAPOR BARRIER SHALL BE SEALED AT EDGES

29 **DETAIL @ VERT TERMINATION** 10/A1.2
3" = 1'-0"

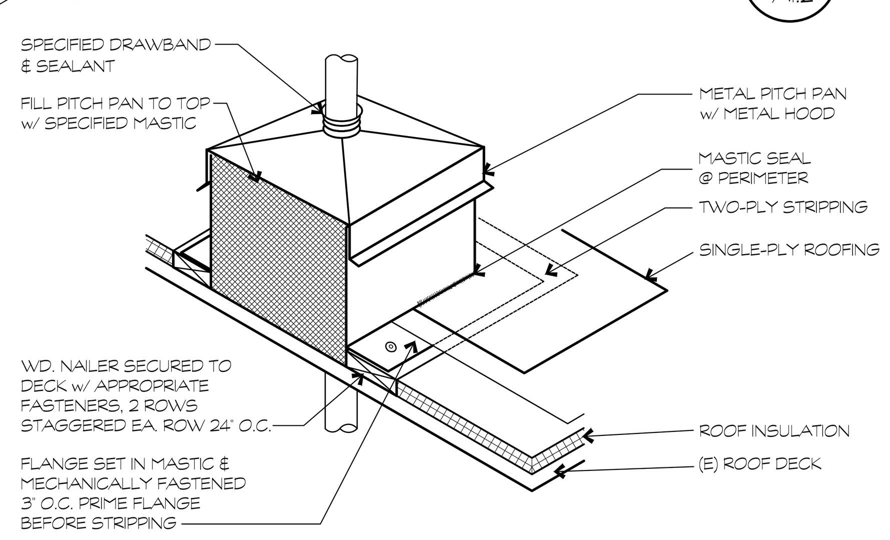

26 **PITCH POCKET W/ GROUT** 9/A1.2
3" = 1'-0"

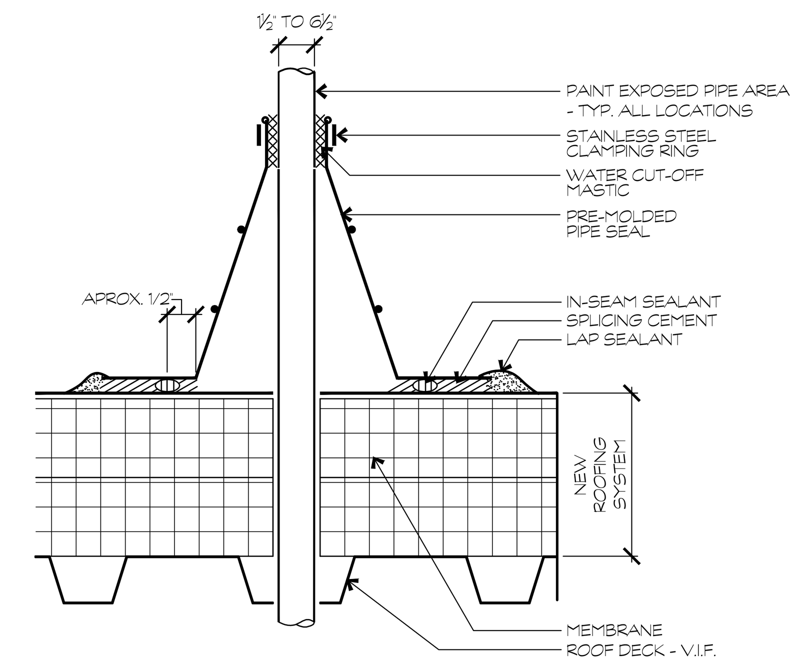

VENT PIPE DETAIL 8/A1.2
3" = 1'-0"

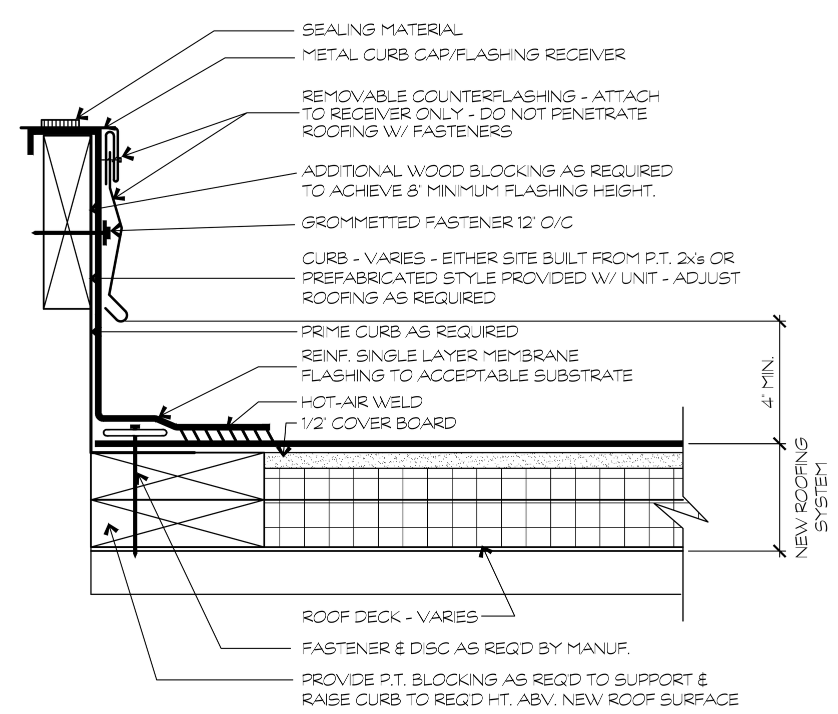

NOTES:
1. MAKE ALL LINE, PIPE, DUCT, & CONDUIT PENETRATIONS INSIDE THE CURB (INCLUDING CONDUITS FOR CONVENIENCE OUTLETS).
2. THIS DETAIL SHOWS THE CURB RESTING ON THE BLOCKING.

22 **FLASHING AT CURBS** 7/A1.2
3" = 1'-0"

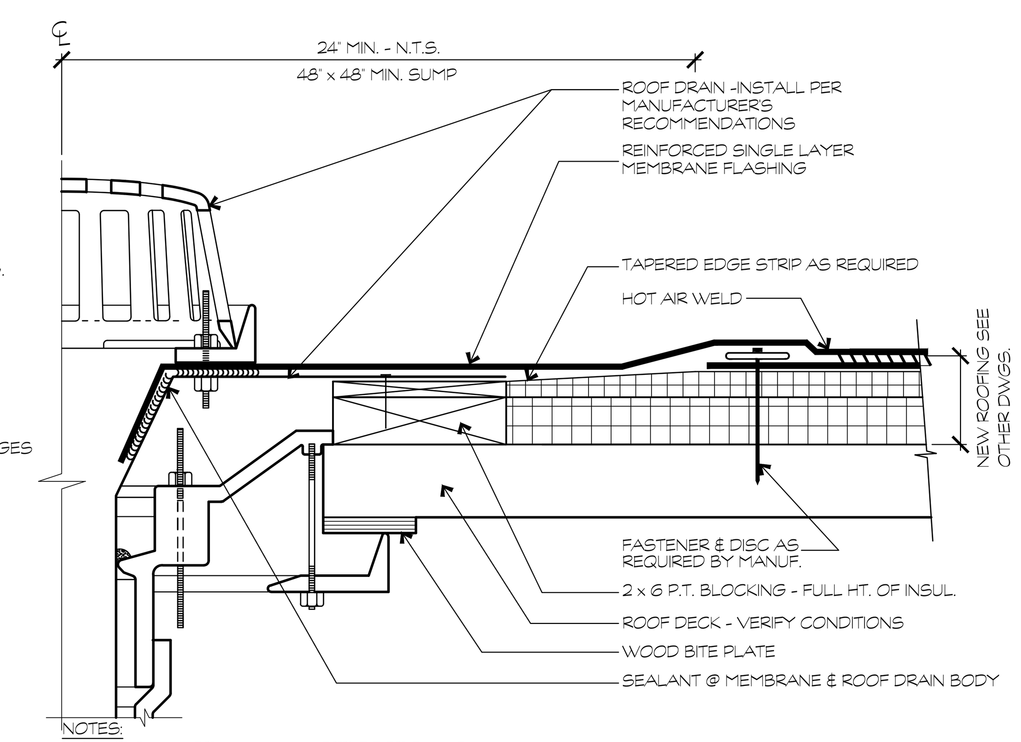

NOTES:
1. SUMP SHALL BE 4' X 4' MIN. - SEE ROOF PLANS
2. EXTEND MEMBRANE PLIES, METAL FLASHING, & FLASHING PLIES UNDER THE CLAMPING RING.
3. NO LAPS WITHIN 6" OF THE CLAMPING RING.
4. FLASHING - PER. MANUFACTURERS RECOMENDATIONS - APPLY PRIMER TO BOTH SURFACES.

20 **TYP. ROOF DRAIN W/ SUMP** 6/A1.2
3" = 1'-0"

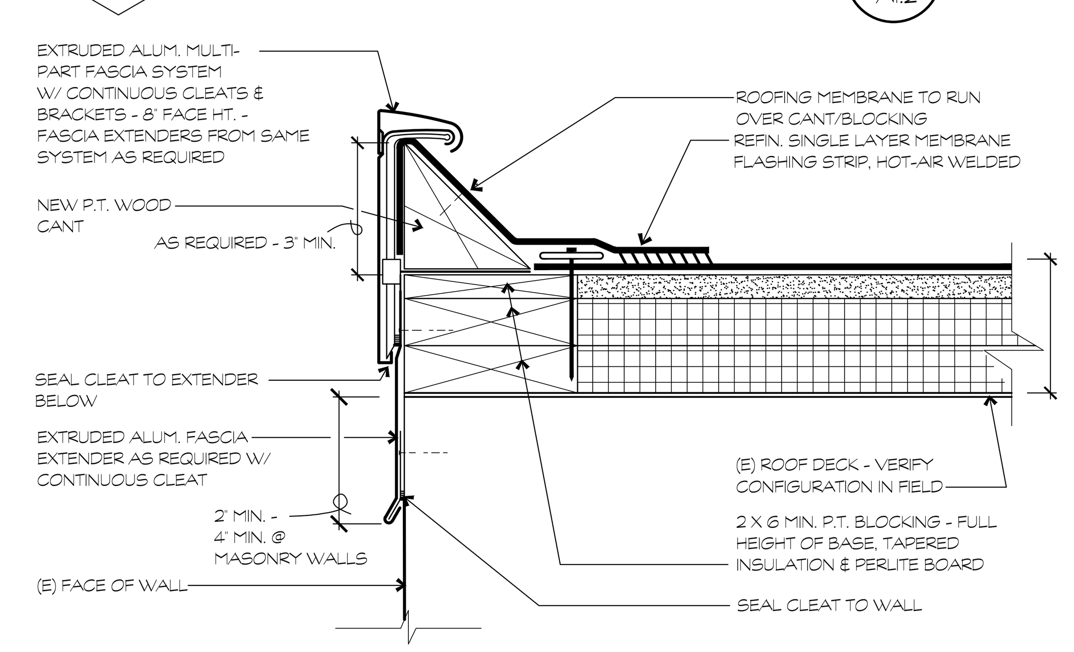

C **TYPICAL DETAIL @ ROOF EDGE (TREMLINE)** 5/A1.2
3" = 1'-0"

NOTE: NO EXPOSED FASTENERS

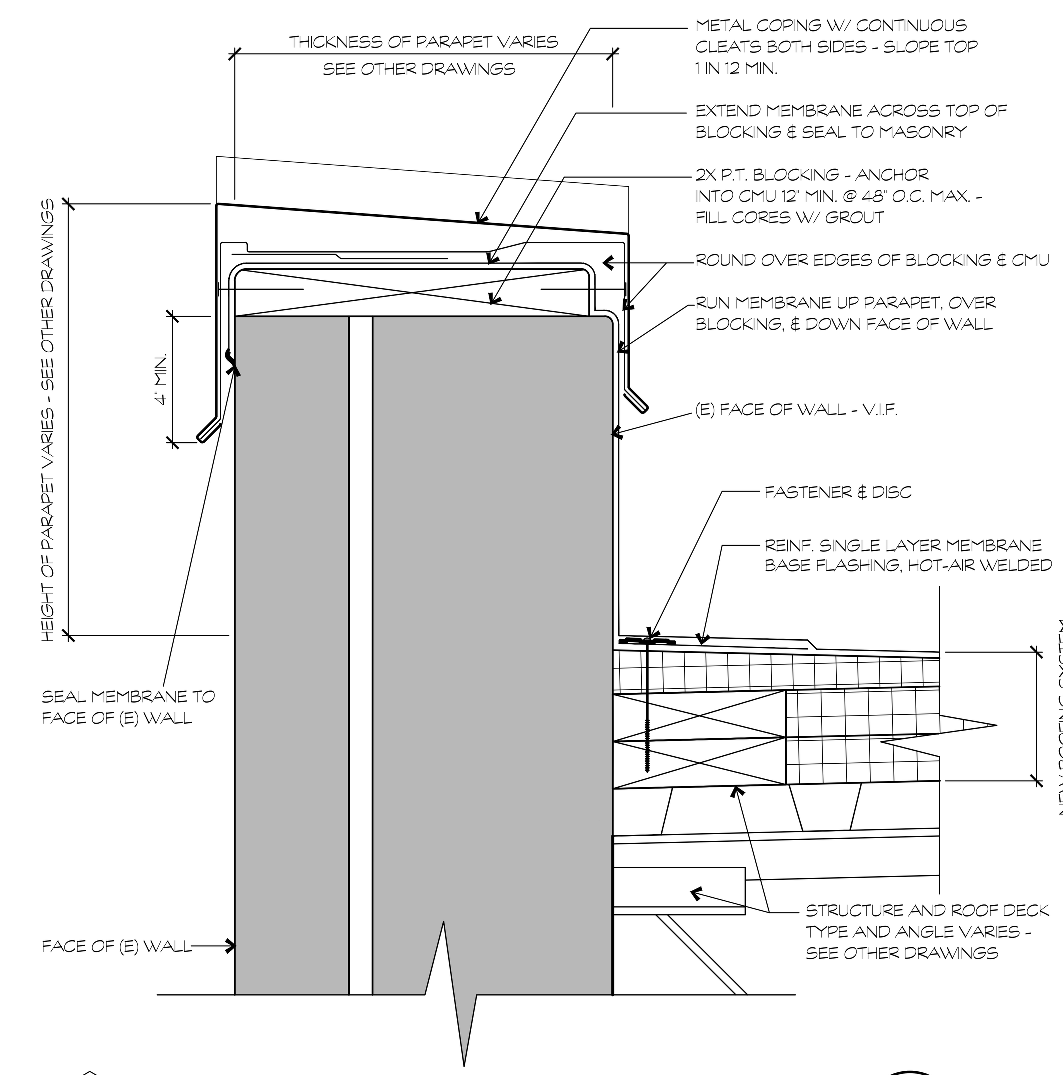

B **PARAPET DETAIL SECTION** 4/A1.2
3" = 1'-0"

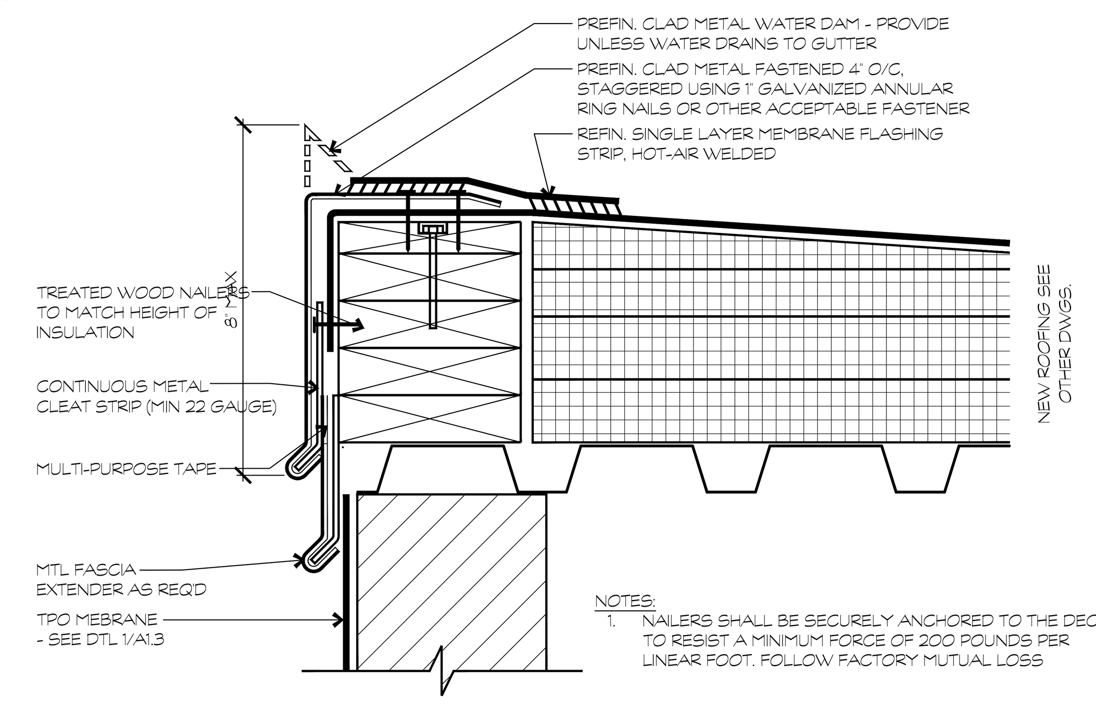

NOTES:
1. NAILERS SHALL BE SECURELY ANCHORED TO THE DECK TO RESIST A MINIMUM FORCE OF 200 POUNDS PER LINEAR FOOT. FOLLOW FACTORY MUTUAL LOSS

A **MTL. ROOF EDGE TYPE 'A'** 3/A1.2
N.T.S.

MIN R VALUE OF 38 TYP. FOR ALL ROOF

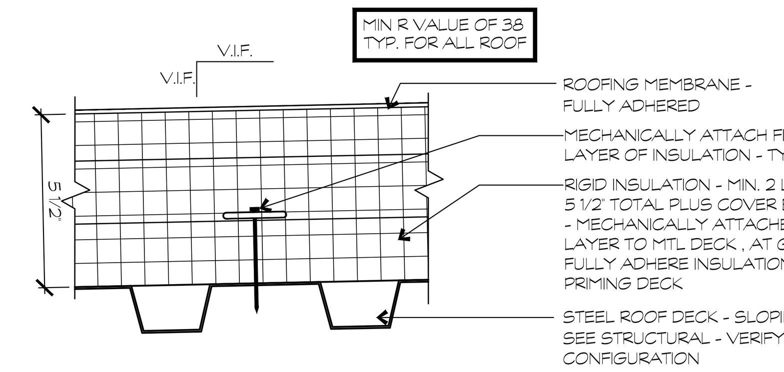

NOTES: 1. VERIFY INSULATION CAN SPAN FLUTES.
2. PROVIDE TAPERED INSULATION CRICKETS PER THE ROOF PLAN.

ROOFING SYSTEM - SLOPED DECK 2/A1.2
3" = 1'-0"

MIN R VALUE OF 38 TYP. FOR ALL ROOF

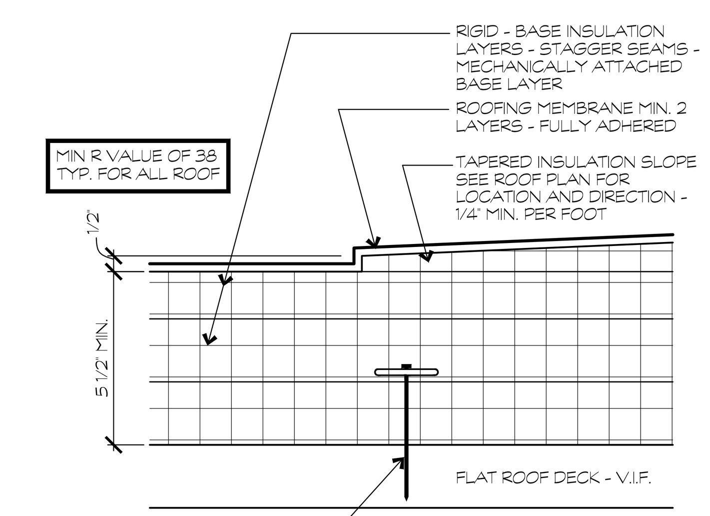

NOTE: CONTRACTOR SHALL VERIFY BELOW DECK CONNECTIONS

ROOFING SYSTEM - LEVEL DECK 1/A1.2
3" = 1'-0"
3" = 1'-0" 0 SCALE 1 FEET

DRAWING INTENT IS TO INDICATE GENERAL ARRANGEMENT, DESIGN AND INTENT OF WORK IS PARTLY DIAGRAMMATIC. IT SHALL NOT BE SCALED FOR ROUGH-IN MEASUREMENTS OR SERVE AS ERECTION SHOP DRAWINGS. CONTRACTOR IS RESPONSIBLE FOR VERIFICATION OF DIMENSIONS

I CERTIFY THAT THESE DOCUMENTS WERE PREPARED OR APPROVED BY ME, AND THAT I AM A DULY LICENSED ARCHITECT UNDER THE LAWS OF THE STATE OF MARYLAND.
LICENSE No. 10011
EXPIRATION DATE 7.7.22

BFM
BUSHEY FEIGHT MORIN ARCHITECTS
473 NORTH POTOMAC STREET, HAGERSTOWN, MD 21740
BFMARCHITECTS.COM : 301-733-5600 : FAX 301-733-5612
© 2021 , BUSHEY FEIGHT MORIN ARCHITECTS, INC.

BFM# 20045
FCPS: LINCOLN 'A' FACILITY
ROOF REPLACEMENT

ROOF DETAILS
A1.2
1 OF SHEETS
DATE : 01.14.21

XREFS: TITLEBL

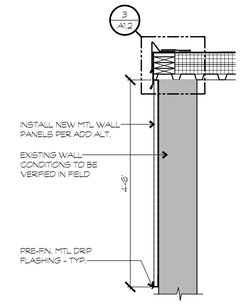

DETAIL @ WALL PANELS -ADD ALTERNATE 4 A1.3

1 1/2" = 1'-0"
1 1/2" = 1'-0"
SCALE 1 0 1 FEET

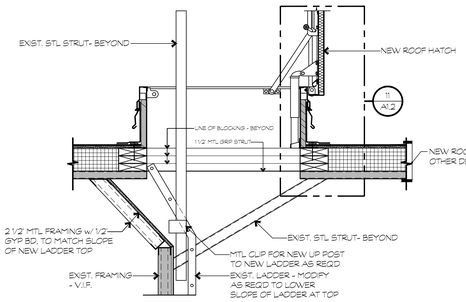

ROOF HATCH DETAIL 2 A1.3

1" = 1'-0"
1" = 1'-0"
SCALE 1 0 1 FEET

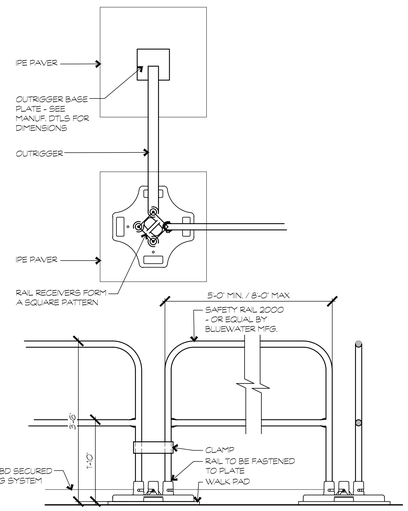

NON-PENETRATING GUARD RAIL DETAIL 3 A1.3

3/4" = 1'-0"
3/4" = 1'-0"
SCALE 1 0 1 2 3 FEET

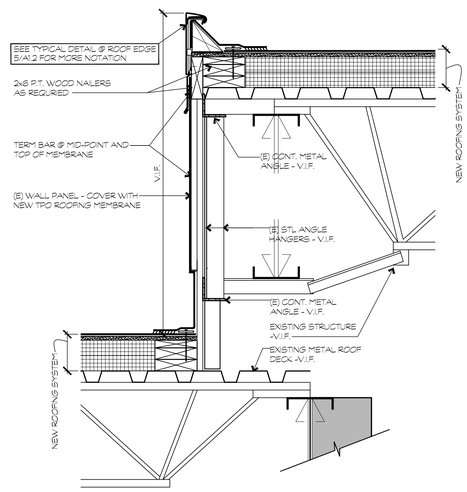

DETAIL @ WALL PANELS -BASE BID 1 A1.3

1 1/2" = 1'-0"
1 1/2" = 1'-0"
SCALE 1 0 1 FEET

DRAWING INTENT IS TO INDICATE GENERAL ARRANGEMENT, DESIGN AND INTENT OF WORK IS PARTLY DIAGRAMMATIC. IT SHALL NOT BE SCALED FOR ROUGHING IN MEASUREMENTS OR SERVE AS ERECTION SHOP DRAWINGS. CONTRACTOR IS RESPONSIBLE FOR VERIFICATION OF DIMENSIONS

I CERTIFY THAT THESE DOCUMENTS WERE PREPARED OR APPROVED BY ME AND THAT I AM A DULY LICENSED ARCHITECT UNDER THE LAWS OF THE STATE OF MARYLAND.
LICENSE No. 10011
EXPIRATION DATE 7.7.22

BFM
BUSHEY FEIGHT MORIN ARCHITECTS
473 NORTH POTOMAC STREET, HAGERSTOWN, MD 21740
BFMARCHITECTS.COM : 301-733-5600 : FAX 301-733-5612
© 2021 , BUSHEY FEIGHT MORIN ARCHITECTS, INC.

BFM# 20045
FCPS: LINCOLN 'A' FACILITY
ROOF REPLACEMENT

ROOF DETAILS
A1.3
1 OF SHEETS
DATE : 01.14.21

XREFS: TITLEBL